EXHIBIT A

2013 UNIFORM GENERAL CONDITIONS
FOR
UNIVERSITY OF TEXAS SYSTEM BUILDING CONSTRUCTION CONTRACTS

2013 Uniform General Conditions

for

University of Texas System Building Construction Contracts

For use on all UT System and Institution Construction Projects

Last Revision: 06/20/2018 ems

Table of Contents

Article 1. Definitions

Article 2. Wage Rates and Other Laws Governing Construction

Article 3. General Responsibilities of Owner and Contractor

Article 4. Historically Underutilized Business (HUB) Subcontracting Plan

Article 5. Bonds and Insurance

Article 6. Construction Documents, Coordination Documents, and Record Documents

Article 7. Construction Safety

Article 8. Quality Control

Article 9. Construction Schedules

Article 10. Payments

Article 11. Changes

Article 12. Project Completion and Acceptance

Article 13. Warranty and Guarantee

Article 14. Suspension and Termination

Article 15. Dispute Resolution

Article 16. Certification of No Asbestos Containing Material or Work

Article 17. Miscellaneous

Issued on August 23, 2013

Article 1. Definitions

Unless the context clearly requires another meaning, the following terms have the meaning assigned herein.

1.1 *Application for Payment* means Contractor's monthly partial invoice for payment that includes any portion of the Work that has been completed for which an invoice has not been submitted and performed in accordance with the requirements of the Contract Documents. The Application for Payment accurately reflects the progress of the Work, is itemized based on the Schedule of Values, bears the notarized signature of Contractor, and shall not include subcontracted items for which Contractor does not intend to pay.

1.2 *Application for Final Payment* means Contractor's final invoice for payment that includes any portion of the Work that has been completed for which an invoice has not been submitted, amounts owing to adjustments to the final Contract Sum resulting from approved change orders, and release of remaining Contractor's retainage.

1.3 *Architect/Engineer (A/E)* means a person registered as an architect pursuant to Tex. Occ. Code Ann., Chapter 1051, as a landscape architect pursuant to Tex. Occ. Code Ann., Chapter 1052, a person licensed as a professional engineer pursuant Tex. Occ. Code Ann., Chapter 1001, and/or a firm employed by Owner or Design-Build Contractor to provide professional architectural or engineering services and to exercise overall responsibility for the design of a Project or a significant portion thereof, and to perform the contract administration responsibilities set forth in the Contract.

1.4 *Baseline Schedule* means the initial time schedule prepared by Contractor for Owner's information and acceptance that conveys Contractor's and Subcontractors' activities (including coordination and review activities required in the Contract Documents to be performed by A/E and ODR), durations, and sequence of work related to the entire Project to the extent required by the Contract Documents. The schedule clearly demonstrates the critical path of activities, durations and necessary predecessor conditions that drive the end date of the schedule. The Baseline Schedule shall not exceed the time limit current under the Contract Documents.

1.5 *Certificate of Final Completion* means the certificate issued by A/E that documents, to the best of A/E's knowledge and understanding, Contractor's completion of all Contractor's Punchlist items and pre-final Punchlist items, final cleanup and Contractor's provision of Record Documents, operations and maintenance manuals, and all other Close-Out documents required by the Contract Documents.

1.6 *Change Order* means a written modification of the Contract between Owner and Contractor, signed by Owner, Contractor and A/E.

1.7 *Close-out Documents* mean the product brochures, submittals, product/equipment maintenance and operations instructions, manuals, and other documents/warranties, record documents, affidavit of payment, release of lien and claim, and as may be further defined, identified, and required by the Contract Documents.

1.8 *Contract* means the entire agreement between Owner and Contractor, including all of the Contract Documents.

1.9 *Contract Date* is the date when the agreement between Owner and Contractor becomes effective.

1.10 *Contract Documents* mean those documents identified as a component of the agreement (Contract) between Owner and Contractor. These may include, but are not limited to, Drawings; Specifications; General Conditions and Owner's Special Conditions; and all pre-bid and/or pre-proposal addenda.

1.11 *Contract Sum* means the total compensation payable to Contractor for completion of the Work in accordance with the terms of the Contract.

1.12 *Contract Time* means the period between the start date identified in the Notice to Proceed with construction and the Substantial Completion date identified in the Notice to Proceed or as subsequently amended by a Change Order.

1.13 *Contractor* means the individual, corporation, limited liability company, partnership, firm, or other entity contracted to perform the Work, regardless of the type of construction contract used, so that the term as used herein includes a Construction Manager-at-Risk or a Design-Build firm as well as a general or prime Contractor. The Contract Documents refer to Contractor as if singular in number.

1.14 *Construction Documents* mean the Drawings, Specifications, and other documents issued to build the Project. Construction Documents become part of the Contract Documents when listed in the Contract or any Change Order.

1.15 *Construction Manager-at-Risk*, in accordance with Tex. Educ. Code § 51.782, means a sole proprietorship, partnership, corporation, or other legal entity that assumes the risk for construction, rehabilitation, alteration, or repair of a facility at the contracted price as a general contractor and provides consultation to Owner regarding construction during and after the design of the facility.

1.16 *Date of Commencement* means the date designated in the Notice to Proceed for Contractor to commence the Work.

1.17 *Day* means a calendar day unless otherwise specifically stipulated.

1.18 *Design-Build* means a project delivery method in which the detailed design and subsequent construction is provided through a single contract with a Design-Build firm; a team, partnership, or legal entity that includes design professionals and a builder. The Design-Build Project delivery shall be implemented in accordance with Tex. Educ. Code § 51.780.

1.19 *Drawings* mean that product of A/E which graphically depicts the Work.

1.20 *Final Completion* means the date determined and certified by A/E and Owner on which the Work is fully and satisfactorily complete in accordance with the Contract.

1.21 *Final Payment* means the last and final monetary compensation made to Contractor for any portion of the Work that has been completed and accepted for which payment has not been made, amounts owing to adjustments to the final Contract Sum resulting from approved change orders, and release of Contractor's retainage.

1.22 *Historically Underutilized Business (HUB)* pursuant to Tex. Gov't Code, Chapter 2161, means a business that is at least 51% owned by an Asian Pacific American, a Black American, a Hispanic American, a Native American and/or an American Woman; is an entity with its principal place of business in Texas; and has an owner residing in Texas with proportionate interest that actively participates in the control, operations, and management of the entity's affairs.

1.23 *Notice to Proceed* means written document informing Contractor of the dates beginning Work and the dates anticipated for Substantial Completion.

1.24 *Open Item List* means a list of work activities, Punchlist items, changes or other issues that are not expected by Owner and Contractor to be complete prior to Substantial Completion.

1.25 *Owner* means The Board of Regents of The University of Texas System, acting through the responsible entity of The University of Texas System or one of its Institutions as identified in the Contract as Owner.

1.26 *Owner's Designated Representative (ODR)* means the individual assigned by Owner to act on its behalf and to undertake certain activities as specifically outlined in the Contract. ODR is the only party

authorized to direct changes to the scope, cost, or time of the Contract.

1.27 *Owner's Special Conditions* mean the documents containing terms and conditions which may be unique to the Project. Owner's Special Conditions are a part of the Contract Documents and have precedence over the Uniform General Conditions

1.28 *Project* means all activities necessary for realization Owner's desired building or other structure including all ancillary and related work. This includes design, contract award(s), execution of the Work itself, work by Owner's forces and/or other contractors and fulfillment of all Contract and warranty obligations.

1.29 *Progress Assessment Report (PAR)* means the monthly compliance report to Owner verifying compliance with the HUB subcontracting plan (HSP).

1.30 *Proposed Change Order (PCO)* means a document that informs Contractor of a proposed change in the Work and appropriately describes or otherwise documents such change including Contractor's response of pricing for the proposed change.

1.31 *Punchlist* means a list of items of Work to be completed or corrected by Contractor before Final Completion. The Punchlist(s) indicates items to be finished, remaining Work to be performed, or Work that does not meet quality or quantity requirements as required in the Contract Documents.

1.32 *Record Documents* mean the drawing set, Specifications, and other materials maintained by Contractor that documents all addenda, Architect's Supplemental Instructions, Change Orders and postings and markings that record the as-constructed conditions of the Work and all changes made during construction.

1.33 *Request for Information (RFI)* means a written request by Contractor directed to A/E or ODR for a clarification of the information provided in the Contract Documents or for direction concerning information necessary to perform the Work that may be omitted from the Contract Documents.

1.34 *Samples* mean representative physical examples of materials, equipment, or workmanship used to confirm compliance with requirements and/or to establish standards for use in execution of the Work.

1.35 *Schedule of Values* means the detailed breakdown of the cost of the materials, labor, and equipment necessary to accomplish the Work as described in the Contract Documents, submitted by Contractor for approval by Owner and A/E.

1.36 *Shop Drawings* mean the drawings, diagrams, illustrations, schedules, performance charts, brochures, and other data prepared by Contractor or its agents which detail a portion of the Work.

1.37 *Site* means the geographical area of the location of the Work.

1.38 *Specifications* mean the written product of A/E that establishes the quality and/or performance of products utilized in the Work and processes to be used, including testing and verification for producing the Work.

1.39 *Subcontractor* means a business entity that enters into an agreement with Contractor to perform part of the Work or to provide services, materials, or equipment for use in the Work.

1.40 *Submittal Register* means a list provided by Contractor of all items to be furnished for review and approval by A/E and Owner and as identified in the Contract Documents including anticipated sequence and submittal dates.

1.41 *Substantial Completion* means the date determined and certified by Contractor, A/E, and Owner when the Work, or a designated portion thereof, is sufficiently complete, in accordance with the Contract, so

as to be operational and fit for the use intended.

1.42 *Unit Price Work* means the Work, or a portion of the Work, paid for based on incremental units of measurement.

1.43 *Unilateral Change Order (ULCO)* means a Change Order issued by Owner without the complete agreement of Contractor, as to cost and/or time.

1.44 *Work* means the administration, procurement, materials, equipment, construction and all services necessary for Contractor, and/or its agents, to fulfill Contractor's obligations under the Contract.

1.45 *Work Progress Schedule* means the continually updated time schedule prepared and monitored by Contractor that accurately indicates all necessary appropriate revisions as required by the conditions of the Work and the Project while maintaining a concise comparison to the Baseline Schedule.

Article 2. Wage Rates and Other Laws Governing Construction

2.1 Environmental Regulations. Contractor shall conduct activities in compliance with applicable laws and regulations and other requirements of the Contract relating to the environment and its protection at all times. Unless otherwise specifically determined, Owner is responsible for obtaining and maintaining permits related to stormwater run-off. Contractor shall conduct operations consistent with stormwater run-off permit conditions. Contractor is responsible for all items it brings to the Site, including hazardous materials, and all such items brought to the Site by its Subcontractors and suppliers, or by other entities subject to direction of Contractor. Contractor shall not incorporate hazardous materials into the Work without prior approval of Owner, and shall provide an affidavit attesting to such in association with request for Substantial Completion inspection.

2.2 Wage Rates. Contractor shall not pay less than the wage scale of the various classes of labor as shown on the prevailing wage schedule provided by Owner in the bid or proposal specifications. The specified wage rates are minimum rates only. Owner is not bound to pay any claims for additional compensation made by any Contractor because the Contractor pays wages in excess of the applicable minimum rate contained in the Contract. The prevailing wage schedule is not a representation that qualified labor adequate to perform the Work is available locally at the prevailing wage rates.

2.2.1 Notification to Workers. Contractor shall post the prevailing wage schedule in a place conspicuous to all workers on the Project Site and shall notify each worker, in writing, of the following as they commence work on the Contract: the worker's job classification, the established minimum wage rate requirement for that classification, as well as the worker's actual wage. The notice must be delivered to and signed in acknowledgement of receipt by the worker and must list both the wages and fringe benefits to be paid or furnished for each classification in which the worker is assigned duties. When requested by Owner, Contractor shall furnish evidence of compliance with the Texas Prevailing Wage Law and the addresses of all workers.

2.2.1.1 Contractor shall submit a copy of each worker's wage-rate notification to ODR with the application for progress payment for the period during which the worker was engaged in activities on behalf of the Project.

2.2.1.2 The prevailing wage schedule is determined by Owner in compliance with Tex. Gov't Code, Chapter 2258. Should Contractor at any time become aware that a particular skill or trade not reflected on Owner's prevailing wage schedule will be or is being employed in the Work, whether by Contractor or by Subcontractor, Contractor shall promptly inform ODR of the proposed wage to be paid for the skill along with a justification for same and ODR shall promptly concur with or reject the proposed wage and classification. Contractor is responsible for determining the most appropriate wage for a particular skill in relation to similar skills or trades

identified on the prevailing wage schedule. In no case, shall any worker be paid less than the wage indicated for laborers.

2.2.2 Penalty for Violation. Contractor, and any Subcontractor, will pay to the State a penalty of sixty dollars ($60) for each worker employed for each day, or portion thereof, that the worker is paid less than the wage rates stipulated in the prevailing wage schedule.

2.2.3 Complaints of Violations.

2.2.3.1 Owner's Determination of Good Cause. Upon receipt of information concerning a violation, Owner will conduct an investigation in accordance with Tex. Gov't Code, Chapter 2258 and make an initial determination as to whether good cause exists that a violation occurred. Upon making a good cause finding, Owner will retain the full amounts claimed by the claimant or claimants as the difference between wages paid and wages due under the prevailing wage schedule and any supplements thereto, together with the applicable penalties, such amounts being subtracted from successive progress payments pending a final decision on the violation.

2.2.3.2 No Extension of Time. If Owner's determination proves valid that good cause existed to believe a violation had occurred, Contractor is not entitled to an extension of time for any delay arising directly or indirectly from the arbitration procedures.

2.3 Venue for Suits. The venue for any suit arising from the Contract will be in a court of competent jurisdiction in Travis County, Texas, or as may otherwise be designated in the Owner's Special Conditions.

2.4 Licensing of Trades. Contractor shall comply with all applicable provisions of State law related to license requirements for skilled tradesmen, contractors, suppliers and or laborers, as necessary to accomplish the Work. In the event Contractor, or one of its Subcontractors, loses its license during the term of performance of the Contract, Contractor shall promptly hire or contract with a licensed provider of the service at no additional cost to Owner.

2.5 Royalties, Patents, and Copyrights. Contractor shall pay all royalties and license fees, defend suits or claims for infringement of copyrights and patent rights, and shall hold Owner harmless from loss on account thereof, but shall not be responsible for such defense or loss when a particular design, process or product of a particular manufacturer or manufacturers is required by the Contract Documents, or where the copyright violations are contained in Drawings, Specifications or other documents prepared by Owner or A/E. However, if Contractor has reason to believe that the required design, process, or product is an infringement of a copyright or a patent, Contractor shall be responsible for such loss unless such information is promptly furnished to A/E.

2.6 State Sales and Use Taxes. Owner qualifies for exemption from certain State and local sales and use taxes pursuant to the provisions of Tex. Tax Code, Chapter 151. Upon request from Contractor, Owner shall furnish evidence of tax exempt status. Contractor may claim exemption from payment of certain applicable State taxes by complying with such procedures as prescribed by the State Comptroller of Public Accounts. Owner acknowledges not all items qualify for exemption. Owner is not obligated to reimburse Contractor for taxes paid on items that qualify for tax exemption.

Article 3. General Responsibilities of Owner and Contractor

3.1 Owner's General Responsibilities. Owner is the entity identified as such in the Contract and referred to throughout the Contract Documents as if singular in number.

3.1.1 Preconstruction Conference. Prior to, or concurrent with, the issuance of Notice to Proceed with construction, a conference will be convened for attendance by Owner, Contractor, A/E and appropriate Subcontractors. The purpose of the conference is to establish a working

understanding among the parties as to the Work, the operational conditions at the Project Site, and general administration of the Project. Topics include communications, schedules, procedures for handling Shop Drawings and other submittals, processing Applications for Payment, maintaining required records and all other matters of importance to the administration of the Project and effective communications between the Project team members.

3.1.2 Owner's Designated Representative. Prior to the start of construction, Owner will identify Owner's Designated Representative (ODR), who has the express authority to act and bind Owner to the extent and for the purposes described in the various Articles of the Contract, including responsibilities for general administration of the Contract.

3.1.2.1 Unless otherwise specifically defined elsewhere in the Contract Documents, ODR is the single point of contact between Owner and Contractor. Notice to ODR, unless otherwise noted, constitutes notice to Owner under the Contract.

3.1.2.2 All directives on behalf of Owner will be conveyed to Contractor and A/E by ODR in writing.

3.1.2.3 Owner will furnish or cause to be furnished, free of charge, the number of complete sets of the Drawings, Specifications, and addenda as provided in the Agreement or Special Conditions.

3.1.3 Owner Supplied Materials and Information.

3.1.3.1 Owner will furnish to Contractor those surveys describing the physical characteristics, legal description, limitations of the Site, Site utility locations, and other information used in the preparation of the Contract Documents.

3.1.3.2 Owner will provide information, equipment, or services under Owner's control to Contractor with reasonable promptness.

3.1.4 Availability of Lands. Owner will furnish, as indicated in the Contract, all required rights to use the lands upon which the Work occurs. This includes rights-of-way and easements for access and such other lands that are designated for use by Contractor. Contractor shall comply with all Owner identified encumbrances or restrictions specifically related to use of lands so furnished. Owner will obtain and pay for easements for permanent structures or permanent changes in existing facilities, unless otherwise required in the Contract Documents.

3.1.5 Limitation on Owner's Duties.

3.1.5.1 Owner will not supervise, direct, control or have authority over or be responsible for Contractor's means, methods, technologies, sequences or procedures of construction or the safety precautions and programs incident thereto. Owner is not responsible for any failure of Contractor to comply with laws and regulations applicable to the Work. Owner is not responsible for the failure of Contractor to perform or furnish the Work in accordance with the Contract Documents. Except as provided in Section 2.5, Owner is not responsible for the acts or omissions of Contractor, or any of its Subcontractors, suppliers or of any other person or organization performing or furnishing any of the Work on behalf of Contractor.

3.1.5.2 Owner will not take any action in contravention of a design decision made by A/E in preparation of the Contract Documents, when such actions are in conflict with statutes under which A/E is licensed for the protection of the public health and safety.

3.2 Role of Architect/Engineer. Unless specified otherwise in the Contract between Owner and Contractor,

A/E shall provide general administration services for Owner during the construction phase of the project. Written correspondence, requests for information, and Shop Drawings/submittals shall be directed to A/E for action. A/E has the authority to act on behalf of Owner to the extent provided in the Contract Documents, unless otherwise modified by written instrument, which will be furnished to Contractor by ODR, upon request.

3.2.1 Site Visits.

3.2.1.1 A/E will make visits to the Site at intervals as provided in the A/E's Contract (or the Design/Build Contractor's Contract, if applicable) with Owner, to observe the progress and the quality of the various aspects of Contractor's executed Work and report findings to Owner.

3.2.1.2 A/E has the authority to interpret Contract Documents and inspect the Work for compliance and conformance with the Contract. Except as referenced in Paragraph 3.1.5.2, Owner retains the sole authority to accept or reject Work and issue direction for correction, removal, or replacement of Work.

3.2.2 Clarifications and Interpretations. It may be determined that clarifications or interpretations of the Contract Documents are necessary. Upon direction by ODR, such clarifications or interpretations will be provided by A/E consistent with the intent of the Contract Documents. A/E will issue these clarifications with reasonable promptness to Contractor as A/E's supplemental instruction ("ASI") or similar instrument. If Contractor believes that such clarification or interpretation justifies an adjustment in the Contract Sum or the Contract Time, Contractor shall so notify Owner in accordance with the provisions of Article 11.

3.2.3 Limitations on Architect/Engineer Authority. A/E is not responsible for:

3.2.3.1 Contractor's means, methods, techniques, sequences, procedures, safety, or programs incident to the Project, nor will A/E supervise, direct, control or have authority over the same;

3.2.3.2 The failure of Contractor to comply with laws and regulations applicable to the furnishing or performing the Work;

3.2.3.3 Contractor's failure to perform or furnish the Work in accordance with the Contract Documents; or

3.2.3.4 Acts or omissions of Contractor, or of any other person or organization performing or furnishing any of the Work.

3.3 Contractor's General Responsibilities. Contractor is solely responsible for implementing the Work in full compliance with all applicable laws and the Contract Documents and shall supervise and direct the Work using the best skill and attention to assure that each element of the Work conforms to the Contract requirements. Contractor is solely responsible for all construction means, methods, techniques, safety, sequences, coordination and procedures.

Contractor shall visit the Site before commencing the Work and become familiar with local conditions such as the location, accessibility and general character of the Site and/or building.

3.3.1 Project Administration. Contractor shall provide Project administration for all Subcontractors, vendors, suppliers, and others involved in implementing the Work and shall coordinate administration efforts with those of A/E and ODR in accordance with these general conditions, Division 1 of the Specifications and other provisions of the Contract, and as outlined in the pre-construction conference.

3.3.1.1 At the request of Owner and at no additional cost, Contractor shall furnish to the ODR one copy of the current edition of the RSMeans Facilities Construction Cost Data Book in hard copy format or digital medium as directed by the ODR.

3.3.2 Contractor's Management Personnel. Contractor shall employ a competent person or persons who will be present at the Project Site during the progress of the Work to supervise or oversee the work. The competent persons are subject to the approval of ODR. Contractor shall not change approved staff during the course of the project without the written approval of ODR unless the staff member leaves the employment of Contractor. Contractor shall provide additional quality control, safety and other staff as stated in the Contract Documents.

3.3.3 Labor. Contractor shall provide competent, suitably qualified personnel to survey, lay-out, and construct the Work as required by the Contract Documents and maintain good discipline and order at the Site at all times.

3.3.4 Services, Materials, and Equipment. Unless otherwise specified, Contractor shall provide and assume full responsibility for all services, materials, equipment, labor, transportation, construction equipment and machinery, tools, appliances, fuel, power, light, heat, telephone, water, sanitary facilities, temporary facilities, and all other facilities, incidentals, and services necessary for the construction, performance, testing, start-up, inspection and completion of the Work.

3.3.5 Contractor General Responsibility. For Owner furnished equipment or material that will be in the care, custody, and control of Contractor, Contractor is responsible for damage or loss.

3.3.6 Non-Compliant Work. Should A/E and/or ODR identify Work as non-compliant with the Contract Documents, A/E and/or ODR shall communicate the finding to Contractor, and Contractor shall correct such Work at no additional cost to the Owner. The approval of Work or the failure to find non-compliant Work by either A/E or ODR does not relieve Contractor from the obligation to comply with all requirements of the Contract Documents.

3.3.7 Subcontractors. Contractor shall not employ any Subcontractor, supplier or other person or organization, whether initially or as a substitute, against whom Owner shall have reasonable objection. Owner will communicate such objections in writing within ten (10) days of receipt of Contractor's intent to use such Subcontractor, supplier, or other person or organization. Contractor is not required to employ any Subcontractor, supplier or other person or organization to furnish any of the work to whom Contractor has reasonable objection. Contractor shall not substitute Subcontractors without the acceptance of Owner.

3.3.7.1 All Subcontracts and supply contracts shall be consistent with and bind the Subcontractors and suppliers to the terms and conditions of the Contract Documents including provisions of the Contract between Contractor and Owner.

3.3.7.2 Contractor shall be solely responsible for scheduling and coordinating the Work of Subcontractors, suppliers and other persons and organizations performing or furnishing any of the Work under a direct or indirect contract with Contractor. Require all Subcontractors, suppliers and such other persons and organizations performing or furnishing any of the Work to communicate with Owner only through Contractor. Contractor shall furnish to Owner a copy, at Owner's request, of each first-tier subcontract promptly after its execution. Contractor agrees that Owner has no obligation to review or approve the content of such contracts and that providing Owner such copies in no way relieves Contractor of any of the terms and conditions of the Contract, including, without limitation, any provisions of the Contract which require the Subcontractor to be bound to Contractor in the same manner in which Contractor is bound to Owner.

3.3.8 Continuing the Work. Contractor shall carry on the Work and adhere to the progress schedule during all disputes, disagreements, or alternative resolution processes with Owner. Contractor shall not delay or postpone any Work because of pending unresolved disputes, disagreements or alternative resolution processes, except as Owner and Contractor may agree in writing.

3.3.9 Cleaning. Contractor shall at all times, keep the Site and the Work clean and free from accumulation of waste materials or rubbish caused by the construction activities under the Contract. Contractor shall ensure that the entire Project is thoroughly cleaned prior to requesting Substantial Completion inspection and, again, upon completion of the Project prior to the final inspection.

3.3.10 Acts and Omissions of Contractor, its Subcontractors and Employees. Contractor shall be responsible for acts and omissions of his employees and all its Subcontractors, their agents and employees. Owner may, in writing, require Contractor to remove from the Project any of Contractor's or its Subcontractor's employees whom ODR finds to be careless, incompetent, unsafe, uncooperative, disruptive, or otherwise objectionable.

3.3.11 Ancillary Areas. Contractor shall operate and maintain operations and associated storage areas at the site of the Work in accordance with the following:

3.3.11.1 All Contractor operations, including storage of materials and employee parking upon the Site of Work, shall be confined to areas designated by Owner.

3.3.11.2 Contractor may erect, at its own expense, temporary buildings that will remain its property. Contractor shall remove such buildings and associated utility service lines upon completion of the Work, unless Contractor requests and Owner provides written consent that it may abandon such buildings and utilities in place.

3.3.11.3 Contractor shall use only established roadways or construct and use such temporary roadways as may be authorized by Owner. Contractor shall not allow load limits of vehicles to exceed the limits prescribed by appropriate regulations or law. Contractor shall provide protection to road surfaces, curbs, sidewalks, trees, shrubbery, sprinkler systems, drainage structures and other like existing improvements to prevent damage and repair any damage thereto at the expense of Contractor.

3.3.11.4 Owner may restrict Contractor's entry to the Site to specifically assigned entrances and routes.

3.3.12 Separate Contracts. Owner reserves the right to award other contracts in connection with the Project under the same or substantially similar contract terms, including those portions related to insurance and waiver of subrogation. Owner reserves the right to perform operations related to the Project with Owner's own forces.

3.3.13 Under a system of separate contracts, the conditions described herein continue to apply except as may be amended by change order.

3.3.14 Contractor shall cooperate with other contractors or forces employed on the Project by Owner, including providing access to Site, integration of activities within Contractor's Work Progress Schedule and Project information as requested.

3.3.15 Owner shall be reimbursed by Contractor for costs incurred by Owner which are payable to a separate contractor because of delays, improperly timed activities, or defective construction by Contractor. Owner will equitably adjust the Contract by Change Order for costs incurred by Contractor because of delays, improperly timed activities, damage to the Work or defective construction by a separate contractor.

3.4 Indemnification of Owner.

3.4.1 Contractor covenants and agrees to FULLY INDEMNIFY and HOLD HARMLESS, Owner and the elected and appointed officials, employees, officers, directors, volunteers, and representatives of Owner, individually or collectively, from and against any and all costs, claims, liens, damages, losses, expenses, fees, fines, penalties, proceedings, actions, demands, causes of action, liability and suits of any kind and nature, including but not limited to, personal or bodily injury, death or property damage, made upon Owner directly or indirectly arising out of, resulting from or related to Contractor's activities under this Contract, including any acts or omissions of Contractor, or any agent, officer, director, representative, employee, consultant or the Subcontractor of Contractor, and their respective officers, agents, employees, directors and representatives while in the exercise of performance of the rights or duties under this Contract. The indemnity provided for in this paragraph does not apply to any liability resulting from the negligence of the Owner, its officers or employees, separate contractors or assigned contractors, in instances where such negligence causes personal injury, death or property damage. IN THE EVENT CONTRACTOR AND OWNER ARE FOUND JOINTLY LIABLE BY A COURT OF COMPETENT JURISDICTION, LIABILITY WILL BE APPORTIONED COMPARATIVELY IN ACCORDANCE WITH THE LAWS OF THE STATE OF TEXAS, WITHOUT WAIVING ANY GOVERNMENTAL IMMUNITY AVAILABLE TO THE STATE UNDER TEXAS LAW AND WITHOUT WAIVING ANY DEFENSES OF THE PARTIES UNDER TEXAS LAW.

3.4.2 **Contractor shall protect and indemnify the Owner from and against all claims, damages, judgments and losses arising from infringement or alleged infringement of any United States patent, or copyright that arise out of any of the work performed by the Contractor or the use by Contractor, or by Owner at the direction of Contractor, of any article or material. Upon becoming aware of a suit or threat of suit for patent or copyright infringement, Owner shall promptly notify Contractor and Contractor shall be given full opportunity to negotiate a settlement. Contractor does not warrant against infringement by reason of Owner's or Project Architect's design of articles or their use in combination with other materials or in the operation of any process. In the event of litigation, Owner agrees to cooperate reasonably with Contractor and parties shall be entitled, in connection with any such litigation, to be represented by counsel at their own expense.**

3.4.3 The provisions of this indemnification are solely for the benefit of the parties hereto and not intended to create or grant any rights, contractual or otherwise, to any other person or entity.

3.4.4 Contractor shall promptly advise Owner in writing of any claim or demand against Owner or against Contractor which involves Owner and known to Contractor and related to or arising out of Contractor's activities under this Contract.

3.4.5 These indemnity provisions shall survive the termination of this Agreement regardless of the reason for termination.

Article 4. Historically Underutilized Business (HUB) Subcontracting Plan

4.1 General Description. The purpose of the Historically Underutilized Business (HUB) program is to promote equal business opportunities for economically disadvantaged persons (as defined by Tex. Gov't Code, Chapter 2161) to contract with the State of Texas in accordance with the goals specified in the State of Texas Disparity Study. The HUB program annual procurement utilization goals are defined in 34 T.A.C. § 20.13(b).

4.1.1 State agencies are required by statute to make a good faith effort to assist HUBs in participating

in contract awards issued by the State. 34 T.A.C. § 20.13(b) outlines the State's policy to encourage the utilization of HUBs in State contracting opportunities through race, ethnic and gender neutral means.

4.1.2 A Contractor who contracts with the State in an amount of $100,000 or greater is required to make a good faith effort to award subcontracts to HUBs in accordance with 34 T.A.C. § 20.14(a)(2)(A) by submitting a HUB subcontracting plan within twenty-four (24) hours after the bid or response is due and complying with the HUB subcontracting plan after it is accepted by Owner and during the term of the Contract.

4.2 Compliance with Approved HUB Subcontracting Plan. Contractor, having been awarded this Contract in part by complying with the HUB program statute and rules, hereby covenants to continue to comply with the HUB program as follows:

4.2.1 Prior to adding or substituting a Subcontractor, promptly notify Owner in the event a change is required for any reason to the accepted HUB subcontracting plan.

4.2.2 Conduct the good-faith effort activities required and provide Owner with necessary documentation to justify approval of a change to the approved HUB subcontracting plan.

4.2.3 Cooperate in the execution of a Change Order or such other approval of the change in the HUB subcontracting plans as Contractor and Owner may agree to.

4.2.4 Maintain and make available to Owner upon request business records documenting compliance with the accepted HUB subcontracting plan.

4.2.5 Upon receipt of payment for performance of Work, submit to Owner a compliance report, in the format required by Owner that demonstrates Contractor's performance of the HUB subcontracting plan.

4.2.5.1 Progress Assessment Report (PAR): monthly compliance reports to Owner (contracting agency), verifying their compliance with the HUB subcontracting plan, including the use/expenditures they have made to Subcontractors. (The PAR is available at **http://www.window.state.tx.us/procurement/prog/hub/hub-forms/progressassessmentrpt.xls**).

4.2.6 Promptly and accurately explain and provide supplemental information to Owner to assist in Owner's investigation of Contractor's good-faith effort to fulfill the HUB subcontracting plan and the requirements under 34 T.A.C. § 20.14(a)(1).

4.3 Failure to Demonstrate Good-Faith Effort. Upon a determination by Owner that Contractor has failed to demonstrate a good-faith effort to fulfill the HUB subcontracting plan or any Contract covenant detailed above, Owner may, in addition to all other remedies available to it, report the failure to perform to the Comptroller of Public Accounts, Texas Procurement and Support Services Division, Historically Underutilized Business Program and may bar Contractor from future contracting opportunities with Owner.

Article 5. Bonds and Insurance

5.1 Construction Bonds. Contractor is required to tender to Owner, prior to commencing the Work, performance and payment bonds, as required by Tex. Gov't Code, Chapter 2253. On Construction Manager-at-Risk and Design-Build Projects the Owner shall require a security bond, as described in Subsection 5.1.2 below.

5.1.1 Bond Requirements. Each bond shall be executed by a corporate surety or sureties authorized to do business in the State of Texas and acceptable to Owner, on Owner's form, and in

compliance with the relevant provisions of the Texas Insurance Code. If any bond is for more than ten (10) percent of the surety's capital and surplus, Owner may require certification that the company has reinsured the excess portion with one or more reinsurers authorized to do business in the State. A reinsurer may not reinsure for more than ten (10) percent of its capital and surplus. If a surety upon a bond loses its authority to do business in the State, Contractor shall, within thirty (30) days after such loss, furnish a replacement bond at no added cost to Owner.

5.1.1.1 A Performance bond is required if the Contract Sum is in excess of $100,000. The performance bond is solely for the protection of Owner. The performance bond is to be for the Contract Sum to guarantee the faithful performance of the Work in accordance with the Contract Documents. The form of the bond shall be approved by the Office of the Attorney General of Texas. The performance bond shall be effective through Contractor's warranty period.

5.1.1.2 A Payment bond is required if the Contract price is in excess of $25,000. The payment bond is to be for the Contract Sum and is payable to Owner solely for the protection and use of payment bond beneficiaries. The form of the bond shall be approved by the Office of the Attorney General of Texas.

5.1.2 Security Bond. The security bond provides protection to Owner if Contractor presents an acceptable guaranteed maximum price ("GMP") to Owner but is unable to deliver the required payment and performance bonds within the time period stated below.

5.1.3 When Bonds Are Due

5.1.3.1 Security bonds are due before execution of a Construction Manager-at-Risk or Design-Build Contract.

5.1.3.2 Payment and performance bonds are due before execution of a contract on competitively bid or competitively sealed proposal projects or before execution of a GMP proposal on Construction Manager-at-Risk projects or Design-Build projects.

5.1.4 Power of Attorney. Each bond shall be accompanied by a valid power of attorney (issued by the surety company and attached, signed and sealed with the corporate embossed seal, to the bond) authorizing the attorney-in-fact who signs the bond to commit the company to the terms of the bond, and stating any limit in the amount for which the attorney can issue a single bond.

5.1.5 Bond Indemnification. The process of requiring and accepting bonds and making claims thereunder shall be conducted in compliance with Tex. Gov't Code, Chapter 2253. IF FOR ANY REASON A STATUTORY PAYMENT OR PERFORMANCE BOND IS NOT HONORED BY THE SURETY, CONTRACTOR SHALL FULLY INDEMNIFY AND HOLD OWNER HARMLESS OF AND FROM ANY COSTS, LOSSES, OBLIGATIONS OR LIABILITIES IT INCURS AS A RESULT.

5.1.6 Furnishing Bond Information. Owner shall furnish certified copies of the payment bond and the related Contract to any qualified person seeking copies who complies with Tex. Gov't Code § 2253.026.

5.1.7 Claims on Payment Bonds. Claims on payment bonds must be sent directly to Contractor and his surety in accordance with Tex. Gov't Code § 2253.041. All payment bond claimants are cautioned that no lien exists on the funds unpaid to Contractor on such Contract, and that reliance on notices sent to Owner may result in loss of their rights against Contractor and/or his surety. Owner is not responsible in any manner to a claimant for collection of unpaid bills, and accepts no such responsibility because of any representation by any agent or employee.

5.1.8 Payment Claims when Payment Bond not Required. The rights of Subcontractors regarding payment are governed by Tex. Prop. Code §§ 53.231 – 53.239 when the value of the Contract between Owner and Contractor is less than $25,000.00. These provisions set out the requirements for filing a valid lien on funds unpaid to Contractor as of the time of filing the claim, actions necessary to release the lien and satisfaction of such claim.

5.1.9 Sureties. A surety shall be listed on the US Department of the Treasury's Listing of Approved Sureties maintained by the Bureau of Financial Management Service (FMS), www.fms.treas.gov/c570, stating companies holding Certificates of Authority as acceptable sureties on Federal bonds and acceptable reinsuring companies (FMS Circular 570).

5.2 Insurance Requirements. Contractor shall carry insurance in the types and amounts indicated in this Article for the duration of the Contract. The required insurance shall include coverage for Owner's property prior to construction, during construction and during the warranty period. The insurance shall be evidenced by delivery to Owner of certificates of insurance executed by the insurer or its authorized agent stating coverages, limits, expiration dates and compliance with all applicable required provisions. Upon request, Owner, and/or its agents, shall be entitled to receive without expense, copies of the policies and all endorsements. Contractor shall update all expired policies prior to submission for monthly payment. Failure to update policies shall be reason for withholding of payment until renewal is provided to Owner.

5.2.1 Contractor, consistent with its status as an independent contractor, shall provide and maintain all insurance coverage with the minimum amounts described below until the end of the warranty period unless otherwise stated in Owner's Special Conditions. Failure to maintain insurance coverage, as required, is grounds for suspension of Work for cause pursuant to Article 14. The Contractor will be notified of the date on which the Builder's Risk insurance policy may be terminated by any means deemed appropriate by Owner.

5.2.2 Coverage shall be written on an occurrence basis by companies authorized and admitted to do business in the State of Texas and rated A-, VII or better by A.M. Best Company or similar rating company or otherwise acceptable to Owner.

5.2.2.1 Insurance Coverage Required.

5.2.2.1.1 Workers' Compensation. Insurance with limits as required by the Texas Workers' Compensation Act and Employer's Liability Insurance with limits of not less than:

$1,000,000 each accident;

$1,000,000 disease each employee; and

$1,000,000 disease policy limit.

Policies must include (a) Other States Endorsement to include TEXAS if business is domiciled outside the State of Texas, and (b) a waiver of all rights of subrogation in favor of Owner.

5.2.2.1.2 Commercial General Liability Insurance, including premises, operations, independent contractor's liability, products and completed operations and contractual liability, covering, but not limited to, the liability assumed under the indemnification provisions of this Contract, fully insuring Contractor's (or Subcontractor's) liability for bodily injury (including death) and property damage with a minimum limit of:

$1,000,000 per occurrence;

$2,000,000 general aggregate;

$2,000,000 products and completed operations aggregate; and

Coverage shall be on an "occurrence" basis.

The policy shall include coverage extended to apply to completed operations and explosion, collapse, and underground hazards. The policy shall include endorsement CG2503 Amendment of Aggregate Limits of Insurance (per Project) or its equivalent.

If the Work involves any activities within fifty (50) feet of any railroad, railroad protective insurance as may be required by the affected railroad, written for not less than the limits required by such railroad.

5.2.2.1.3 Asbestos Abatement Liability Insurance, including coverage for liability arising from the encapsulation, removal, handling, storage, transportation, and disposal of asbestos containing materials. *This requirement applies if the Work or the Project includes asbestos containing materials.

The combined single limit for bodily injury and property damage will be a minimum of $1,000,000 per occurrence.

*Specific requirement for claims-made form: Required period of coverage will be determined by the following formula: continuous coverage for life of the Contract, plus one (1) year (to provide coverage for the warranty period), and an extended discovery period for a minimum of five (5) years which shall begin at the end of the warranty period.

Employer's liability limits for asbestos abatement will be:

$1,000,000 each accident;

$1,000,000 disease each employee; and

$1,000,000 disease policy limit.

If this Contract is for asbestos abatement only, the All-Risk Builder's Risk or all-risk installation floater (5.2.2.1.5.e) is not required.

5.2.2.1.4 Business Automobile Liability Insurance, covering all owned, hired, and non-owned vehicles, with a minimum combined single limit for bodily injury (including death) and property damage of $1,000,000 per occurrence. No aggregate shall be permitted for this type of coverage.

Such insurance is to include coverage for loading and unloading hazards.

Contractor or any subcontractor responsible for transporting asbestos or other hazardous materials defined as asbestos shall provide

pollution coverage for any vehicle hauling asbestos containing cargo. The policy must include a MCS 90 endorsement with a $5,000,000 limit and the CA 9948 Pollution Endorsement, or its equivalent.

5.2.2.1.5 All-Risk Builder's Risk Insurance, if applicable (or all-risk installation floater for instances in which the project involves solely the installation of material and/or equipment). Coverage is determined by the Contract Sum, as detailed, below.

BUILDERS RISK REQUIREMENT FOR PROJECTS WITH A CONTRACT SUM <$20 MILLION

5.2.2.1.5.1 Contractor shall purchase and maintain in force builders risk insurance on the entire Work. Such insurance shall be written in the amount of the original contract, plus any subsequent change orders and plus the cost of materials supplied or installed by others, comprising Total Value for the entire Project at the site. The insurance shall apply on a replacement cost basis with no coinsurance provision. A sublimit may be applicable to flood coverage, but sublimit must be at least 20% of the Total Value of the Project. The limit for all other perils, including Named Windstorm, Wind, and Hail, must be equal to the Total Value for the entire Project at the site. (If Installation Floater, limit shall be equal to 100 percent of the contract cost.)

5.2.2.1.5.2 This insurance shall name as insureds the Owner, the Contractor, and all subcontractors and sub-subcontractors in the Work.

5.2.2.1.5.3 Builders risk insurance shall be on an "all risk" or equivalent policy form and shall include, without limitation, insurance against fire and extended coverage perils, theft, vandalism, malicious mischief, collapse, earthquake, flood, windstorm, boiler and machinery/mechanical breakdown, testing and startup, and terrorism.

5.2.2.1.5.4 This insurance shall cover the entire work at the site as required in 5.2.2.1.5.1, including, but not limited to, the following:

- Temporary works including but not limited to scaffolding, form work, fences, shoring, hoarding, falsework and temporary buildings
- Offsite Storage
- Portions of the work in transit
- Debris removal
- Extra Expense
- Expediting Expenses
- Demolition and Increased Cost of Construction
- Pollutant Clean-Up and Removal
- Trees, Shrubs, Plants, Lawns and Landscaping (if applicable)
- Errors & Omissions (applicable to purchase of Builders Risk policy only)

5.2.2.1.5.5 This insurance shall not contain an occupancy clause suspending or reducing coverage should the Owner occupy, or begin beneficial occupancy before the Owner has accepted final completion.

5.2.2.1.5.6 This insurance shall be specific as to coverage and shall be primary to any permanent insurance or self-insurance that may be maintained on the property by Owner.

5.2.2.1.5.7 This insurance shall include a waiver of subrogation in favor of Owner, the Contractor, and all subcontractors and sub-subcontractors in the work.

5.2.2.1.5.8 As applicable, Flood deductible shall not exceed $250,000 for Zone A, $100,000 for Zone B and $50,000 for all other Zones. For Tier 1 and Tier 2, Named Windstorm deductible shall not exceed 2% of the project values in place at the time of the loss.

5.2.2.1.5.9 Before the commencement of the work, Contractor shall provide to Owner an accurate certificate of insurance that provides specific evidence of all requirements outlined in Section 5.2.2.1.5. A copy of the policy itself shall be provided to Owner within 30 days after Notice to Proceed.

5.2.2.1.5.10 Refer to Owner's Special Conditions for possible additional Builders Risk insurance requirements.

BUILDERS RISK REQUIREMENT FOR PROJECTS WITH A CONTRACT SUM ≥$20 MILLION

5.2.2.1.5.1 Contractor shall purchase and maintain in force builders risk insurance on the entire Work. Such insurance shall be written in the amount of the original contract, plus any subsequent change orders and plus the cost of materials supplied or installed by others, comprising Total Value for the entire Project at the site. The insurance shall apply on a replacement cost basis with no coinsurance provision and shall include a margin clause of plus/minus 10% on project value. A sublimit may be applicable to flood coverage, but sublimit must be at least 20% of the Total Value of the Project. A sublimit of $50 million or the Total Value of the Project, whichever is less, is acceptable for Earthquake. The limit for all other perils, including Named Windstorm, Wind, and Hail, must be equal to the Total Value for the entire Project at the site. (If Installation Floater, limit shall be equal to 100 percent of the contract cost.)

5.2.2.1.5.2 This insurance shall name as insureds the Owner, the Contractor, and all subcontractors and sub-subcontractors in the Work.

5.2.2.1.5.3 Builders risk insurance shall be on an "all risk" or equivalent policy form and shall include, without limitation, insurance against fire and extended coverage perils, theft, vandalism, malicious mischief, collapse, earthquake, flood, windstorm, boiler and machinery/mechanical breakdown, testing and startup, and terrorism.

5.2.2.1.5.4 This insurance shall cover the entire work at the site as required in 5.2.2.1.5.1, including, but not limited to, the following:

Coverage	Minimum Limit Required
Temporary works including but not limited to scaffolding, form work, fences, shoring, hoarding, falsework and temporary buildings	$1 million
Offsite Storage	Sufficient to cover the anticipated maximum values stored offsite
Portions of the work in Transit	Sufficient to cover the anticipated maximum values in transit
Debris Removal	25% of Physical damage amount subject to maximum of $5 million or 25% of Total Value of Project whichever is higher
Expediting Expenses	$1 million
Extra Expense	$5 million
Demolition and Increased Cost of Construction	$2 million or 10% of Total Value of Project whichever is higher
Pollutant Clean-Up and Removal	$250,000
Trees, Shrubs, Plants, Lawns and Landscaping (if applicable)	$2,500 per item subject to a maximum of $1 million
Errors & Omissions (applicable to purchase of Builders Risk policy only)	$2.5 million

5.2.2.1.5.5 This insurance shall not contain an occupancy clause suspending or reducing coverage should the Owner occupy, or begin beneficial occupancy before the Owner has accepted final completion.

5.2.2.1.5.6 This insurance shall be specific as to coverage and shall be primary to any permanent insurance or

self-insurance that may be maintained on the property by Owner.

5.2.2.1.5.7 This insurance shall include a waiver of subrogation in favor of Owner, the Contractor, and all subcontractors and sub-subcontractors in the work.

5.2.2.1.5.8 As applicable, Flood deductible shall not exceed $250,000 for Zone A, $100,000 for Zone B and $50,000 for all other Zones. For Tier 1 and Tier 2, Named Windstorm deductible shall not exceed 2% of the project values in place at the time of the loss.

5.2.2.1.5.9 Before the commencement of the work, Contractor shall provide to Owner an accurate certificate of insurance that provides specific evidence of all requirements outlined in Section 5.2.2.1.5. A copy of the policy itself shall be provided to Owner within 30 days after Notice to Proceed.

5.2.2.1.5.10 Refer to Owner's Special Conditions for possible additional Builders Risk insurance requirements.

5.2.2.1.6 "Umbrella" Liability Insurance. On Projects that are not insured under the Owner's Revolving Owner Controlled Insurance Program (ROCIP) or any project requiring demolition services, Contractor shall obtain, pay for and maintain umbrella liability insurance during the Contract term, insuring Contractor (or Subcontractor) that provides coverage at least as broad as and applies in excess and follows form of the primary liability coverages required above. The policy shall provide "drop down" coverage where underlying primary insurance coverage limits are insufficient or exhausted.

5.2.2.1.7 "Umbrella" Liability Insurance coverage shall be in the following amounts:

- If Contract sum is $1,000,000 or less:
  No Umbrella Required
- If Contract Sum is greater than $1,000,000 up to $3,000,000:
  $1,000,000 each occurrence and $2,000,000 annual aggregate
- If Contract Sum is greater than $3,000,000 up to $5,000,000:
  $5,000,000 each occurrence and $5,000,000 annual aggregate
- If Contract Sum is greater than $5,000,000:
  $10,000,000 each occurrence and $10,000,000 annual aggregate

5.2.3 All Policies must include the following clauses, as applicable:

5.2.3.1 Contractor must provide to Owner immediate notice of cancellation, material change, or non-renewal to any insurance coverages required herein above. This requirement may be satisfied by the Contractor providing a copy of the notice received by the insurer to Owner within two business days of date of receipt or by Endorsement of the policies that require Insurer to provide notice to Owner.

5.2.3.2 It is agreed that Contractor's insurance shall be deemed primary with respect to any insurance or self-insurance carried by Owner for liability arising out of operations under the Contract with Owner.

5.2.3.3 Owner, its officials, directors, employees, representatives, and volunteers are added as additional insureds as respects operations and activities of, or on behalf of the named insured performed under Contract with Owner. The additional insured status must cover completed operations as well. This is not applicable to workers' compensation policies.

5.2.3.4 A waiver of subrogation in favor of Owner shall be provided in all policies.

5.2.3.5 If Owner is damaged by the failure of Contractor (or Subcontractor) to maintain insurance as required herein and/or as further described in Owner's Special Conditions, then Contractor shall bear all reasonable costs properly attributable to that failure.

5.2.4 Without limiting any of the other obligations or liabilities of Contractor, Contractor shall require each Subcontractor performing work under the Contract, at Subcontractor's own expense, to maintain during the term of the Contract, the same stipulated minimum insurance including the required provisions and additional policy conditions as shown above. As an alternative, Contractor may include its Subcontractors as additional insureds on its own coverage as prescribed under these requirements. Contractor's certificate of insurance shall note in such event that Subcontractors are included as additional insureds and that Contractor agrees to provide workers' compensation for Subcontractors and their employees. Contractor shall obtain and monitor the certificates of insurance from each Subcontractor in order to assure compliance with the insurance requirements. Contractor must retain the certificates of insurance for the duration of the Contract plus five (5) years and shall have the responsibility of enforcing these insurance requirements among its Subcontractors. Owner shall be entitled, upon request and without expense, to receive copies of these certificates.

5.2.5 Workers' compensation insurance coverage must meet the statutory requirements of Tex. Lab. Code § 401.011(44) and specific to construction projects for public entities as required by Tex. Lab. Code § 406.096.

5.2.5.1 Definitions:

5.2.5.1.1 Certificate of coverage ("certificate")- A copy of a certificate of insurance, a certificate of authority to self-insure issued by the commission, or a coverage agreement (DWC-81, DWC-82, DWC-83, or DWC-84), showing statutory workers' compensation insurance coverage for the person's or entity's employees providing services on a project, for the duration of the project.

5.2.5.1.2 Duration of the project - includes the time from the beginning of the work on the project until the contractor's/person's work on the project has been completed and accepted by the governmental entity.

5.2.5.1.3 Persons providing services on the project ("subcontractor" in §406.096) – includes all persons or entities performing all or part of the services the contractor has undertaken to perform on the project, regardless of whether that person contracted directly with the contractor and regardless of whether that person has employees. This includes, without limitation, independent contractors, subcontractors, leasing companies, motor carriers, owner-operators, employees of any such entity, or employees of any entity which furnishes persons to provide services on the project. "Services" include, without limitation, providing, hauling, or delivering equipment or materials, or providing labor, transportation, or other service related to a project. "Services" does not include activities unrelated to the project, such as food/beverage vendors, office supply deliveries, and delivery of portable toilets.

5.2.5.2 The contractor shall provide coverage, based on proper reporting of classification codes and payroll amounts and filing of any coverage agreements, which meets the statutory requirements of Texas Labor Code, Section 401.011(44) for all employees of the contractor providing services on the project, for the duration of the project.

5.2.5.3 The Contractor must provide a certificate of coverage to the governmental entity prior to being awarded the contract.

5.2.5.4 If the coverage period shown on the contractor's current certificate of coverage ends during the duration of the project, the contractor must, prior to the end of the coverage period, file a new certificate of coverage with the governmental entity showing that coverage has been extended.

5.2.5.5 The contractor shall obtain from each person providing services on a project, and provide to the governmental entity:

(1) a certificate of coverage, prior to that person beginning work on the project, so the governmental entity will have on file certificates of coverage showing coverage for all persons providing services on the project; and

(2) no later than seven days after receipt by the contractor, a new certificate of coverage showing extension of coverage, if the coverage period shown on the current certificate of coverage ends during the duration of the project.

5.2.5.6 The contractor shall retain all required certificates of coverage for the duration of the project and for one year thereafter.

5.2.5.7 The contractor shall notify the governmental entity in writing by certified mail or personal delivery, within 10 days after the contractor knew or should have known, of any change that materially affects the provision of coverage of any person providing services on the project.

5.2.5.8 The contractor shall post on each project site a notice, in the text, form and manner prescribed by the Texas Depart of Insurance Division of Workers' Compensation, informing all persons providing services on the project that they are required to be covered, and stating how a person may verify coverage and report lack of coverage.

5.2.5.9 The contractor shall contractually require each person with whom it contracts to provide services on a project, to:

(1) provide coverage, based on proper reporting of classification codes and payroll amounts and filing of any coverage agreements, which meets the statutory requirements of Texas Labor Code, Section 401.011(44) for all of its employees providing services on the project, for the duration of the project;

(2) provide to the contractor, prior to that person beginning work on the project, a certificate of coverage showing that coverage is being provided for all employees of the person providing services on the project, for the duration of the project;

(3) provide the contractor, prior to the end of the coverage period, a new certificate of coverage showing extension of coverage, if the coverage period shown on the current certificate of coverage ends during the duration of the project;

(4) obtain from each other person with whom it contracts, and provide to the contractor:

(a) a certificate of coverage, prior to the other person beginning work on the project; and

(b) a new certificate of coverage showing extension of coverage, prior to the end of the coverage period, if the coverage period shown on the current certificate of coverage ends during the duration of the project;

(5) retain all required certificates of coverage on file for the duration of the project and for one year thereafter;

(6) notify the governmental entity in writing by certified mail or personal delivery, within 10 days after the person knew or should have known, of any change that materially affects the provision of coverage of any person providing services on the project; and

(7) contractually require each person with whom it contracts, to perform as required by paragraphs (1) - (7), with the certificates of coverage to be provided to the person for whom they are providing services.

5.2.5.10 By signing this contract or providing or causing to be provided a certificate of coverage, the contractor is representing to the governmental entity that all employees of the contractor who will provide services on the project will be covered by workers' compensation coverage for the duration of the project, that the coverage will be based on proper reporting of classification codes and payroll amounts, and that all coverage agreements will be filed with the appropriate insurance carrier or, in the case of a self-insured, with the commission's Division of Self-Insurance Regulation. Providing false or misleading information may subject the contractor to administrative penalties, criminal penalties, civil penalties, or other civil actions.

5.2.5.11 The contractor's failure to comply with any of these provisions is a breach of contract by the contractor which entitles the governmental entity to declare the contract void if the contractor does not remedy the breach within ten days after receipt of notice of breach from the governmental entity.

Article 6. Construction Documents, Coordination Documents, and Record Documents

6.1 Drawings and Specifications.

6.1.1 Copies Furnished. Contractor will be furnished, free of charge, the number of complete sets of the Drawings, Specifications, and addenda as provided in the Agreement or the Owner's Special Conditions. Additional complete sets of Drawings and Specifications, if requested, will be furnished at reproduction cost to the entity requesting such additional sets. Electronic copies of such documents will be provided to Contractor without charge.

6.1.2 Ownership of Drawings and Specifications. All Drawings, Specifications and copies thereof furnished by A/E are to remain A/E's property. These documents are not to be used on any other project, and with the exception of the Contract record set and electronic versions needed for warranty operations, are to be returned to the A/E, upon request, following completion of the Work.

6.1.3 Interrelation of Documents. The Contract Documents as referenced in the Contract between Owner and Contractor are complementary, and what is required by one shall be as binding as if required by all.

6.1.4 Resolution of Conflicts in Documents. Where conflicts may exist within the Contract Documents, the documents shall govern in the following order: (a) Change Orders, addenda, and written amendments to the Contract; (b) the Contract; (c) Drawings; (d) Specifications (but Specifications shall control over Drawings as to quality of materials and installation); and (e) other Contract Documents. Among other categories of documents having the same order of precedence, the term or provision that includes the latest date shall control. Contractor shall notify A/E and ODR for resolution of the issue prior to executing the Work in question.

6.1.5 Contractor's Duty to Review Contract Documents. In order to facilitate its responsibilities for completion of the Work in accordance with and as reasonably inferable from the Contract Documents, prior to commencing the Work, Contractor shall examine and compare the Contract

Documents, information furnished by Owner, relevant field measurements made by Contractor and any visible or reasonably anticipated conditions at the Site affecting the Work. This duty extends throughout the construction phase prior to commencing each particular work activity and/or system installation.

6.1.6 Discrepancies and Omissions in Drawings and Specifications.

6.1.6.1 Promptly report to ODR and to A/E the discovery of any apparent error, omission or inconsistency in the Contract Documents prior to execution of the Work.

6.1.6.2 It is recognized that Contractor is not acting in the capacity of a licensed design professional, unless it is performing as a Design-Build firm.

6.1.6.3 It is further recognized that Contractor's examination of Contract Documents is to facilitate construction and does not create an affirmative responsibility to detect errors, omissions or inconsistencies or to ascertain compliance with applicable laws, building codes or regulations, unless it is performing as a Design-Build firm or a Construction Manager-at-Risk.

6.1.6.4 When performing as a Design-Build firm, Contractor has sole responsibility for discrepancies, errors, and omissions in the Drawings and Specifications.

6.1.6.5 When performing as a Construction Manager-at-Risk, Contractor has a shared responsibility with A/E for discovery and resolution of discrepancies, errors, and omissions in the Contract Documents. In such case, Contractor's responsibility pertains to review, coordination, and recommendation of resolution strategies within budget constraints.

6.1.6.6 Contractor has no liability for errors, omissions, or inconsistencies unless Contractor knowingly failed to report a recognized problem to Owner or the Work is executed under a Design-Build or Construction Manager-at-Risk Contract as outlined above. Should Contractor fail to perform the examination and reporting obligations of these provisions, Contractor is responsible for avoidable costs and direct and/or consequential damages.

6.1.6.7 Owner does not warrant or make any representations as to the accuracy, suitability or completeness of any information furnished to Contractor by Owner or it representatives.

6.2 Requirements for Record Documents. Contractor shall:

6.2.1 Maintain at the Site one copy of all Drawings, Specifications, addenda, approved submittals, Contract modifications, and all Project correspondence. Keep current and maintain Drawings and Specifications in good order with postings and markings to record actual conditions of Work and show and reference all changes made during construction. Provide Owner and A/E access to these documents.

6.2.2 Maintain the Record Documents which reflect the actual field conditions and representations of the Work performed, whether it be directed by addendum, Change Order or otherwise. Make available the Record Documents and all records prescribed herein for reference and examination by Owner and its representatives and agents.

6.2.3 Update the Record Documents at least monthly prior to submission of periodic partial pay estimates. Failure to maintain current Record Documents constitutes cause for denial of a progress payment otherwise due.

6.2.4 Prior to requesting Substantial Completion inspection Contractor shall furnish a copy of its marked-up Record Documents and a preliminary copy of each instructional manual, maintenance and operating manual, parts catalog, wiring diagrams, spare parts, specified written warranties and like publications, or parts for all installed equipment, systems, and like items and as described in the Contract Documents.

6.2.5 Once determined acceptable by ODR with input from A/E, provide one (1) reproducible copy and one (1) electronic media copy in a format acceptable to the ODR `of all Record Documents, unless otherwise required by the Owner's Special Conditions.

6.2.6 Contractor shall be responsible for updating the Record Documents for all Contractor initiated documents and changes to the Contract Documents due to coordination and actual field conditions, including RFIs.

6.2.7 A/E shall be responsible for updating the Record Documents for any addenda, Change Orders, A/E supplemental instructions and any other alterations to the Contract Documents generated by A/E or Owner.

Article 7. Construction Safety

7.1 General. It is the duty and responsibility of Contractor and all of its Subcontractors to be familiar with, enforce and comply with all requirements of Public Law No. 91-596, 29 U.S.C. § 651 et. seq., the Occupational Safety and Health Act of 1970, (OSHA) and all amendments thereto. Contractor shall prepare a safety plan specific to the Project and submit it to ODR and A/E prior to commencing Work. In addition, Contractor and all of its Subcontractors shall comply with all applicable laws and regulations of any public body having jurisdiction for safety of persons or property to protect them from damage, injury or loss and erect and maintain all necessary safeguards for such safety and protection.

7.2 Notices. Contractor shall provide notices as follows:

7.2.1 Notify owners of adjacent property including those that own or operate utility services and/or underground facilities, and utility owners, when prosecution of the Work may affect them or their facilities, and cooperate with them in the protection, removal, relocation and replacement, and access to their facilities and/or utilities.

7.2.2 Coordinate the exchange of material safety data sheets (MSDSs) or other hazard communication information required to be made available to or exchanged between or among employers at the site in connection with laws and regulations. Maintain a complete file of MSDSs for all materials in use on site throughout the construction phase and make such file available to Owner and its agents as requested.

7.3 Emergencies. In any emergency affecting the safety of persons or property, Contractor shall act to minimize, mitigate, and prevent threatened damage, injury or loss.

7.3.1 Have authorized agents of Contractor respond immediately upon call at any time of day or night when circumstances warrant the presence of Contractor to protect the Work or adjacent property from damage or to take such action pertaining to the Work as may be necessary to provide for the safety of the public.

7.3.2 Give ODR and A/E prompt notice of all such events.

7.3.3 If Contractor believes that any changes in the Work or variations from Contract Documents have been caused by its emergency response, promptly notify Owner within seventy-two (72) hours of the emergency response event.

7.3.4 Should Contractor fail to respond, Owner is authorized to direct other forces to take action as necessary and Owner may deduct any cost of remedial action from funds otherwise due Contractor.

7.4 Injuries. In the event of an incident or accident involving outside medical care for an individual on or near the Work, Contractor shall notify ODR and other parties as may be directed promptly, but no later than twenty-four (24) hours after Contractor learns that an event required medical care.

7.4.1 Record the location of the event and the circumstances surrounding it, by using photography or other means, and gather witness statements and other documentation which describes the event.

7.4.2 Supply ODR and A/E with an incident report no later than thirty-six (36) hours after the occurrence of the event. In the event of a catastrophic incident (one (1) fatality or three (3) workers hospitalized), barricade and leave intact the scene of the incident until all investigations are complete. A full set of incident investigation documents, including facts, finding of cause, and remedial plans shall be provided within one (1) week after occurrence, unless otherwise directed by legal counsel. Contractor shall provide ODR with written notification within one week of such catastrophic event if legal counsel delays submission of full report.

7.5 Environmental Safety. Upon encountering any previously unknown potentially hazardous material, or other materials potentially contaminated by hazardous material, Contractor shall immediately stop work activities impacted by the discovery, secure the affected area, and notify ODR immediately.

7.5.1 Bind all Subcontractors to the same duty.

7.5.2 Upon receiving such notice, ODR will promptly engage qualified experts to make such investigations and conduct such tests as may be reasonably necessary to determine the existence or extent of any environmental hazard. Upon completion of this investigation, ODR will issue a written report to Contractor identifying the material(s) found and indicate any necessary steps to be taken to treat, handle, transport or dispose of the material.

7.5.3 Owner may hire third-party contractors to perform any or all such steps.

7.5.4 Should compliance with ODR's instructions result in an increase in Contractor's cost of performance, or delay the Work, Owner will make an equitable adjustment to the Contract Sum and/or the time of completion, and modify the Contract in writing accordingly.

7.6 Trenching Plan. When the project requires excavation which either exceeds a depth of four (4) feet, or results in any worker's upper body being positioned below grade level, Contractor is required to submit a trenching plan to ODR prior to commencing trenching operations unless an engineered plan is part of the Contract Documents. The plan is required to be prepared and sealed by a professional engineer registered in the State of Texas, and hired or employed by Contractor or Subcontractor to perform the work. Said engineer cannot be anyone who is otherwise either directly or indirectly engaged on this project.

Article 8. Quality Control

8.1 Materials & Workmanship. Contractor shall execute Work in a good and workmanlike matter in accordance with the Contract Documents. Contractor shall develop and provide a quality control plan specific to this Project and acceptable to Owner. Where Contract Documents do not specify quality standards, complete and construct all Work in compliance with generally accepted construction industry standards. Unless otherwise specified, incorporate all new materials and equipment into the Work under the Contract.

8.2 Testing.

8.2.1 Owner is responsible for coordinating and paying for routine and special tests required to confirm compliance with quality and performance requirements, except as stated below or otherwise required by the Contract Documents.

8.2.2 Contractor shall provide the following testing as well as any other testing required of Contractor by the Specifications:

8.2. 2.1 Any test of basic material or fabricated equipment included as part of a submittal for a required item in order to establish compliance with the Contract Documents.

8.2. 2.2 Any test of basic material or fabricated equipment offered as a substitute for a specified item on which a test may be required in order to establish compliance with the Contract Documents.

8.2. 2.3 Preliminary, start-up, pre-functional and operational testing of building equipment and systems as necessary to confirm operational compliance with requirements of the Contract Documents.

8.2. 2.4 All subsequent tests on original or replaced materials conducted as a result of prior testing failure.

8.2. 3 All testing shall be performed in accordance with standard test procedures by an accredited laboratory, or special consultant as appropriate, acceptable to Owner. Results of all tests shall be provided promptly to ODR, A/E, and Contractor.

8.2. 4 Non-Compliance (Test Results). Should any of the tests indicate that a material and/or system does not comply with the Contract requirements, the burden of proof remains with Contractor, subject to:

8.2. 4.1 Contractor selection and submission of the laboratory for Owner acceptance.

8.2. 4.2 Acceptance by Owner of the quality and nature of tests.

8.2. 4.3 All tests taken in the presence of A/E and/or ODR, or their representatives.

8.2. 4.4 If tests confirm that the material/systems comply with Contract Documents, Owner will pay the cost of the test.

8.2. 4.5 If tests reveal noncompliance, Contractor will pay those laboratory fees and costs of that particular test and all future tests, of that failing Work, necessary to eventually confirm compliance with Contract Documents.

8.2. 4.6 Proof of noncompliance with the Contract Documents will make Contractor liable for any corrective action which ODR determines appropriate, including complete removal and replacement of non-compliant work or material.

8.2. 5 Notice of Testing. Contractor shall give ODR and A/E timely notice of its readiness and the date arranged so ODR and A/E may observe such inspection, testing, or approval.

8.2. 6 Test Samples. Contractor is responsible for providing Samples of sufficient size for test purposes and for coordinating such tests with their Work Progress Schedule to avoid delay.

8.2. 7 Covering Up Work. If Contractor covers up any Work without providing Owner an opportunity to inspect, Contractor shall, if requested by ODR, uncover and recover the work at Contractor's expense.

8.3 Submittals.

8.3.1 Contractor's Submittals. Contractor shall submit with reasonable promptness consistent with the Project schedule and in orderly sequence all Shop Drawings, Samples, or other information required by the Contract Documents, or subsequently required by Change Order. Prior to submitting, Contractor shall review each submittal for general compliance with Contract Documents and approve submittals for review by A/E and Owner by an approval stamp affixed to each copy. Submittal data presented without Contractor's stamp of approval will be returned without review or comment. Any delay resulting from Contractor's failure to certify approval of the Submittal is Contractor's responsibility.

8.3.1.1 Contractor shall within twenty-one (21) days of the effective date of the Notice To Proceed with construction, submit to ODR and A/E, a submittal schedule/register, organized by specification section, listing all items to be furnished for review and approval by A/E and Owner. The list shall include Shop Drawings, manufacturer's literature, certificates of compliance, materials Samples, materials colors, guarantees, and all other items identified throughout the Specifications.

8.3.1.2 Contractor shall indicate the type of item, Contract requirements reference, and Contractor's scheduled dates for submitting the item along with the requested dates for approval answers from A/E and Owner. The submittal register shall indicate the projected dates for procurement of all included items and shall be updated at least monthly with actual approval and procurement dates. Contractor's Submittal Register must be reasonable in terms of the review time for complex submittals. Contractor's submittal schedule must be consistent with the Work Progress Schedule and identify critical submittals. Show and allow a minimum of fifteen (15) days duration after receipt by A/E and ODR for review and approval. If re-submittal required, allow a minimum of an additional fifteen (15) days for review. Submit the updated Submittal Register with each request for progress payment. Owner may establish routine review procedures and schedules for submittals at the preconstruction conference and/or elsewhere in the Contract Documents. If Contractor fails to update and provide the Submittal Register as required, Owner may, after seven (7) days notice to Contractor withhold a reasonable sum of money that would otherwise be due Contractor.

8.3.1.3 Contractor shall coordinate the Submittal Register with the Work Progress Schedule. Do not schedule Work requiring a submittal to begin prior to scheduling review and approval of the related submittal. Revise and/or update both schedules monthly to ensure consistency and current project data. Provide to ODR the updated Submittal Register and schedule with each application for progress payment. Refer to requirements for the Work Progress Schedule for inclusion of procurement activities therein. Regardless, the Submittal Register shall identify dates submitted and returned and shall be used to confirm status and disposition of particular items submitted, including approval or other action taken and other information not conveniently tracked through the Work Progress Schedule.

8.3.1.4 By submitting Shop Drawings, Samples or other required information, Contractor represents that it has determined and verified all applicable field measurements, field construction criteria, materials, catalog numbers and similar data; and has checked and coordinated each Shop Drawing and Sample with the requirements of the Work and the Contract Documents.

8.3.2 Review of Submittals. A/E and ODR review is only for conformance with the design concept and the information provided in the Contract Documents. Responses to submittals will be in writing. The approval of a separate item does not indicate approval of an assembly in which

the item functions. The approval of a submittal does not relieve Contractor of responsibility for any deviation from the requirements of the Contract unless Contractor informs A/E and ODR of such deviation in a clear, conspicuous, and written manner on the submittal transmittal and at the time of submission, and obtains Owner's written specific approval of the particular deviation.

8.3.3 Correction and Resubmission. Contractor shall make any corrections required to a submittal and resubmit the required number of corrected copies promptly so as to avoid delay, until submittal approval. Direct attention in writing to A/E and ODR, when applicable, to any new revisions other than the corrections requested on previous submissions.

8.3.4 Limits on Shop Drawing Review. Contractor shall not commence any Work requiring a submittal until review of the submittal under Subsection 8.3.2. Construct all such work in accordance with reviewed submittals. Comments incorporated as part of the review in Subsection 8.3.2 of Shop Drawings and Samples is not authorization to Contractor to perform extra work or changed work unless authorized through a Change Order. A/E's and ODR's review, if any, does not relieve Contractor from responsibility for defects in the Work resulting from errors or omissions of any kind on the submittal, regardless of any approval action.

8.3.5 No Substitutions Without Approval. ODR and A/E may receive and consider Contractor's request for substitution when Contractor agrees to reimburse Owner for review costs and satisfies the requirements of this section. If Contractor does not satisfy these conditions, ODR and A/E will return the request without action except to record noncompliance with these requirements. Owner will not consider the request if Contractor cannot provide the product or method because of failure to pursue the Work promptly or coordinate activities properly. Contractor's request for a substitution may be considered by ODR and A/E when:

8.3.5.1 The Contract Documents do not require extensive revisions; and

8.3.5.2 Proposed changes are in keeping with the general intent of the Contract Documents and the design intent of A/E and do not result in an increase in cost to Owner; and

8.3.5.3 The request is timely, fully documented, properly submitted and one or more of the following apply:

8.3.5.3.1 Contractor cannot provide the specified product, assembly or method of construction within the Contract Time;

8.3.5.3.2 The request directly relates to an "or-equal" clause or similar language in the Contract Documents;

8.3.5.3.3 The request directly relates to a "product design standard" or "performance standard" clause in the Contract Documents;

8.3.5.3.4 The requested substitution offers Owner a substantial advantage in cost, time, energy conservation or other considerations, after deducting additional responsibilities Owner must assume;

8.3.5.3.5 The specified product or method of construction cannot receive necessary approval by an authority having jurisdiction, and ODR can approve the requested substitution;

8.3.5.3.6 Contractor cannot provide the specified product, assembly or method of construction in a manner that is compatible with other materials and where Contractor certifies that the substitution will overcome the incompatibility;

8.3.5.3.7 Contractor cannot coordinate the specified product, assembly or method of construction with other materials and where Contractor certifies they can coordinate the proposed substitution; or

8.3.5.3.8 The specified product, assembly or method of construction cannot provide a warranty required by the Contract Documents and where Contractor certifies that the proposed substitution provides the required warranty.

8.3.6 Unauthorized Substitutions at Contractor's Risk. Contractor is financially responsible for any additional costs or delays resulting from unauthorized substitution of materials, equipment or fixtures other than those specified. Contractor shall reimburse Owner for any increased design or contract administration costs resulting from such unauthorized substitutions.

8.4 Field Mock-up.

8.4.1 Mock-ups shall be constructed prior to commencement of a specified scope of work to confirm acceptable workmanship.

8.4.1.1 As a minimum, field mock-ups shall be constructed for roofing systems, exterior veneer / finish systems, glazing systems, and any other Work requiring a mock-up as identified throughout the Contract Documents. Mock-ups for systems not part of the Project scope shall not be required.

8.4.1.2 Mock-ups may be incorporated into the Work if allowed by the Contract Documents and if acceptable to ODR. If mock-ups are freestanding, they shall remain in place until otherwise directed by Owner.

8.4.1.3 Contractor shall include field mock-ups in their Work Progress Schedule and shall notify ODR and A/E of readiness for review sufficiently in advance to coordinate review without delay.

8.5 Inspection During Construction.

8.5.1 Contractor shall provide sufficient, safe, and proper facilities, including equipment as necessary for safe access, at all reasonable times for observation and/or inspection of the Work by Owner and its agents.

8.5.2 Contractor shall not cover up any Work with finishing materials or other building components prior to providing Owner and its agents an opportunity to perform an inspection of the Work.

8.5.2.1 Should corrections of the Work be required for approval, Contractor shall not cover up corrected Work until Owner indicates approval.

8.5.2.2 Contractor shall provide notification of at least five (5) working days or otherwise as mutually agreed, to ODR of the anticipated need for a cover-up inspection. Should ODR fail to make the necessary inspection within the agreed period, Contractor may proceed with cover-up Work, but is not relieved of responsibility for Work to comply with requirements of the Contract Documents.

Article 9. Construction Schedules

9.1 Contract Time. **TIME IS AN ESSENTIAL ELEMENT OF THE CONTRACT**. The Contract Time is the time between the dates indicated in the Notice to Proceed for commencement of the Work and for achieving Substantial Completion. The Contract Time can be modified only by Change Order. Failure

to achieve Substantial Completion within the Contract Time or as otherwise agreed to in writing will cause damage to Owner and may subject Contractor to liquidated damages as provided in the Contract Documents. If Contractor fails to achieve Final Completion in a reasonable time after Substantial Completion, Contractor shall be responsible for Owner's damages including, but not limited to, additional inspection, project management, and maintenance cost to the extent caused by Contractor's failure to achieve Final Completion.

9.2 Notice to Proceed. Owner will issue a Notice to Proceed which shall state the dates for beginning Work and for achieving Substantial Completion of the Work.

9.3 Work Progress Schedule. Refer to Owner's Special Conditions and Division 1 of the Specifications for additional schedule requirements. Unless indicated otherwise in those documents, Contractor shall submit their initial Work Progress Schedule for the Work in relation to the entire Project not later than twenty-one (21) calendar days after the effective date of the Notice to Proceed to ODR and A/E. Unless otherwise indicated in the Contract Documents, the Work Progress Schedule shall be computerized Critical Path Method (CPM) with fully editable logic. This initial schedule shall indicate the dates for starting and completing the various aspects required to complete the Work, including mobilization, procurement, installation, testing, inspection, delivery of Close-out Documents and acceptance of all the Work of the Contract. When acceptable to Owner, the initially accepted schedule shall be the Baseline Schedule for comparison to actual conditions throughout the Contract duration.
Note: This article pertains to construction phase schedules. Additional requirements for design phase scheduling for Construction Manager-at-Risk and Design-Build contracts are outlined in Division 1 Project Planning and Scheduling Specifications.

9.3.1 Schedule Requirements. Contractor shall submit electronic and paper copy of the initial Work Progress Schedule reflecting accurate and reliable representations of the planned progress of the Work, the Work to date if any, and of Contractor's actual plans for its completion. Contractor shall organize and provide adequate detail so the schedule is capable of measuring and forecasting the effect of delaying events on completed and uncompleted activities.

9.3.1.1 Contractor shall re-submit initial schedule as required to address review comments from A/E and ODR until such schedule is accepted as the Baseline Schedule.

9.3.1.2 Submittal of a schedule, schedule revision or schedule update constitutes Contractor's representation to Owner of the accurate depiction of all progress to date and that Contractor will follow the schedule as submitted in performing the Work.

9.3.2 Schedule Updates. Contractor shall update the Work Progress Schedule and the Submittal Register monthly, as a minimum, to reflect progress to date and current plans for completing the Work, while maintaining original schedule as Baseline Schedule and submit paper and electronic copies of the update to A/E and ODR as directed, but as a minimum with each request for payment. Owner has no duty to make progress payments unless accompanied by the updated Work Progress Schedule. Show the anticipated date of completion reflecting all extensions of time granted through Change Order as of the date of the update. Contractor may revise the Work Progress Schedule when in Contractor's judgment it becomes necessary for the management of the Work. Contractor shall identify all proposed changes to schedule logic to Owner and to A/E via an executive summary accompanying the updated schedule for review prior to final implementation of revisions into a revised Baseline Schedule. Schedule changes that materially impact Owner's operations shall be communicated promptly to ODR and shall not be incorporated into the revised Baseline Schedule without ODR's consent.

9.3.3 The Work Progress Schedule is for Contractor's use in managing the Work and submittal of the schedule, and successive updates or revisions, is for the information of Owner and to demonstrate that Contractor has complied with requirements for planning the Work. Owner's acceptance of a schedule, schedule update or revision constitutes Owner's agreement to coordinate its own activities with Contractor's activities as shown on the schedule.

9.3.3.1 Acceptance of the Work Progress Schedule, or update and/or revision thereto does not indicate any approval of Contractor's proposed sequences and duration.

9.3.3.2 Acceptance of a Work Progress Schedule update or revision indicating early or late completion does not constitute Owner's consent, alter the terms of the Contract, or waive either Contractor's responsibility for timely completion or Owner's right to damages for Contractor's failure to do so.

9.3.3.3 Contractor's scheduled dates for completion of any activity or the entire Work do not constitute a change in terms of the Contract. Change Orders are the only method of modifying the Substantial Completion Date(s) and Contract Time.

9.4 Ownership of Float. Unless indicated otherwise in the Contract Documents, Contractor shall develop its schedule, pricing, and execution plan to provide a minimum of ten (10) percent total float at acceptance of the Baseline Schedule. Float time contained in the Work Progress Schedule is not for the exclusive benefit of Contractor or Owner, but belongs to the Project and may be consumed by either party. Before Contractor uses any portion of the float Contractor must submit a written request to do so to the Owner and receive Owner's written authorization to use the float. Owner's approval shall not be unreasonably withheld.

9.5 Completion of Work. Contractor is accountable for completing the Work within the Contract Time stated in the Contract, or as otherwise amended by Change Order.

9.5.1 If, in the judgment of Owner, the work is behind schedule and the rate of placement of work is inadequate to regain scheduled progress to insure timely completion of the entire work or a separable portion thereof, Contractor, when so informed by Owner, shall immediately take action to increase the rate of work placement by:

9.5.1.1 An increase in working forces.

9.5.1.2 An increase in equipment or tools.

9.5.1.3 An increase in hours of work or number of shifts.

9.5.1.4 Expedite delivery of materials.

9.5.1.5 Other action proposed if acceptable to Owner.

9.5.2 Within ten (10) days after such notice from ODR, Contractor shall notify ODR in writing of the specific measures taken and/or planned to increase the rate of progress. Contactor shall include an estimate as to the date of scheduled progress recovery and an updated Work Progress Schedule illustrating Contractor's plan for achieving timely completion of the Project. Should ODR deem the plan of action inadequate, Contractor shall take additional steps or make adjustments as necessary to its plan of action until it meets with ODR's approval.

9.6 Modification of the Contract Time.

9.6.1 Delays and extension of time as hereinafter described are valid only if executed in accordance with provisions set forth in Article 11.

9.6.2 When a delay defined herein as excusable prevents Contractor from completing the Work within the Contract Time, Contractor is entitled to an extension of time. Owner will make an equitable adjustment and extend the number of days lost because of excusable delay or Weather Days, as measured by Contractor's progress schedule. All extensions of time will be granted in calendar days. In no event, however, will an extension of time be granted for delays that

merely extend the duration of non-critical activities, or which only consume float without delaying the project Substantial Completion date(s).

9.6.2.1 A "Weather Day" is a day on which Contractor's current schedule indicates Work is to be done, and on which inclement weather and related site conditions prevent Contractor from performing seven (7) hours of Work between the hours of 7:00 a.m. and 6:00 p.m. Weather days are excusable delays. When weather conditions at the site prevent work from proceeding, Contractor shall immediately notify ODR for confirmation of the conditions. At the end of each calendar month, Contractor shall submit to ODR and A/E a list of Weather Days occurring in that month along with documentation of the impact on critical activities. Based on confirmation by ODR, any time extension granted will be issued by Change Order. If Contractor and Owner cannot agree on the time extension, Owner may issue a ULCO for fair and reasonable time extension.

9.6.2.2 Excusable Delay. Contractor is entitled to an equitable adjustment of the Contract Time, issued via change order, for delays caused by the following:

9.6.2.2.1 Errors, omissions and imperfections in design, which A/E corrects by means of changes in the Drawings and Specifications.

9.6.2.2.2 Unanticipated physical conditions at the Site, which A/E corrects by means of changes to the Drawings and Specifications or for which ODR directs changes in the Work identified in the Contract Documents.

9.6.2.2.3 Changes in the Work that effect activities identified in Contractor's schedule as "critical" to completion of the entire Work, if such changes are ordered by ODR or recommended by A/E and ordered by ODR.

9.6.2.2.4 Suspension of Work for unexpected natural events (sometimes called "acts of God"), civil unrest, strikes or other events which are not within the reasonable control of Contractor.

9.6.2.2.5 Suspension of Work for convenience of ODR, which prevents Contractor from completing the Work within the Contract Time.

9.6.3 Contractor's relief in the event of such delays is the time impact to the critical path as determined by analysis of Contractor's schedule. In the event that Contractor incurs additional direct costs because of the excusable delays other than described in Subparagraph 9.6.2.2.4 and within the reasonable control of Owner, the Contract price and Contract Time are to be equitably adjusted by Owner pursuant to the provisions of Article 11.

9.7 No Damages for Delay. An extension of the Contract Time shall be the sole remedy of Contractor for delays in performance of the Work, whether or not such delays are foreseeable, except for delays caused solely by acts of Owner that constitute intentional interference with Contractor's performance of the Work and then only to the extent such acts continue after Contractor notifies Owner in writing of such interference. For delays caused by any act(s) other than the sole intentional interference of Owner, Contractor shall not be entitled to any compensation or recovery of any damages including, without limitation, consequential damages, lost opportunity costs, impact damages, loss of productivity, or other similar damages. Owner's exercise of any of its rights or remedies under the Contract including, without limitation, ordering changes in the Work or directing suspension, rescheduling, or correction of the Work, shall not be construed as intentional interference with Contractor's performance of the Work regardless of the extent or frequency of Owner's exercise of such rights or remedies.

9.8 Concurrent Delay. When the completion of the Work is simultaneously delayed by an excusable delay

and a delay arising from a cause not designated as excusable, Contractor may not be entitled to a time extension for the period of concurrent delay.

9.9 Other Time Extension Requests. Time extensions requested in association with changes to the Work directed or requested by Owner shall be included with Contractor's proposed costs for such change. Time extensions requested for inclement weather are covered by Paragraph 9.6.2.1 above. If Contractor believes that the completion of the Work is delayed by a circumstance other than for changes directed to the Work or weather, they shall give ODR written notice, stating the nature of the delay and the activities potentially affected, within five (5) days after the onset of the event or circumstance giving rise to the excusable delay. Contractor shall provide sufficient written evidence to document the delay. In the case of a continuing cause of delay, only one notice of claim is necessary. State claims for extensions of time in numbers of whole or half days.

9.9.1 Within ten (10) days after the cessation of the delay, Contractor shall formalize its request for extension of time in writing to include a full analysis of the schedule impact of the delay and substantiation of the excusable nature of the delay. All changes to the Contract Time or made as a result of such claims is by Change Order, as set forth in Article 11.

9.9.2 No extension of time releases Contractor or the Surety furnishing a performance or payment bond from any obligations under the Contract or such a bond. Those obligations remain in full force until the discharge of the Contract.

9.9.3 Contents of Time Extension Requests. Contractor shall provide with each Time Extension Request a quantitative demonstration of the impact of the delay on project completion time, based on the Work Progress Schedule. Contractor shall include with Time Extension Requests a reasonably detailed narrative setting forth:

9.9.3.1 The nature of the delay and its cause; the basis of Contractor's claim of entitlement to a time extension.

9.9.3.2 Documentation of the actual impacts of the claimed delay on the critical path indicated in Contractor's Work Progress Schedule, and any concurrent delays.

9.9.3.3 Description and documentation of steps taken by Contractor to mitigate the effect of the claimed delay, including, when appropriate, the modification of the Work Progress Schedule.

9.9.4 Owner's Response. Owner will respond to the Time Extension Request by providing to Contractor written notice of the number of days granted, if any, and giving its reason if this number differs from the number of days requested by Contractor.

9.9.4.1 Owner will not grant time extensions for delays that do not affect the Contract Substantial Completion date.

9.9.4.2 Owner will respond to each properly submitted Time Extension Request within fifteen (15) days following receipt. If Owner cannot reasonably make a determination about Contractor's entitlement to a time extension within that time, Owner will notify Contractor in writing. Unless otherwise agreed by Contractor, Owner has no more than fifteen (15) additional days to prepare a final response. If Owner fails to respond within forty-five (45) days from the date the Time Extension Request is received, Contractor's request for a time extension shall be deemed rejected by Owner.

9.10 Failure to Complete Work Within the Contract Time. **TIME IS AN ESSENTIAL ELEMENT OF THE CONTRACT.** Contractor's failure to substantially complete the Work within the Contract Time or to achieve Substantial Completion as required will cause damage to Owner. These damages may be

liquidated by agreement of Contractor and Owner, in the amount per day as set forth in the Contract Documents.

9.11 Liquidated Damages. Owner may collect liquidated damages due from Contractor directly or indirectly by reducing the Contract Sum in the amount of liquidated damages stated in the Agreement or the Owner's Special Conditions.

Article 10. Payments

10.1 Schedule of Values. Contractor shall submit to ODR and A/E for acceptance a Schedule of Values accurately itemizing material and labor for the various classifications of the Work based on the organization of the specification sections and of sufficient detail acceptable to ODR. The accepted Schedule of Values will be the basis for the progress payments under the Contract.

10.1.1 No progress payments will be made prior to receipt and acceptance of the Schedule of Values, provided in such detail as required by ODR, and submitted not less than twenty-one (21) days prior to the first request for payment. The Schedule of Values shall follow the order of trade divisions of the Specifications and include itemized costs for general conditions, costs for preparing Close-Out documents, fees, contingencies, and Owner cash allowances, if applicable, so that the sum of the items will equal the Contract price. As appropriate, assign each item labor and/or material values, the subtotal thereof equaling the value of the work in place when complete.

10.1.1.1 Owner requires that the Work items be inclusive of the cost of the Work items only. Any contract markups for overhead and profit, general conditions, etc., shall be contained within separate line items for those specific purposes which shall be divided into at least two (2) lines, one (1) for labor and one (1) for materials.

10.1.2 Contractor shall retain a copy of all worksheets used in preparation of its bid or proposal, supported by a notarized statement that the worksheets are true and complete copies of the documents used to prepare the bid or proposal. Make the worksheets available to ODR at the time of Contract execution. Thereafter Contractor shall grant Owner during normal business hours access to said copy of worksheets at any time during the period commencing upon execution of the Contract and ending one year after final payment.

10.2. Progress Payments. Contractor will receive periodic progress payments for Work performed, materials in place, suitably stored on Site, or as otherwise agreed to by Owner and Contractor. Payment is not due until receipt by ODR or his designee of a correct and complete Pay Application in electronic and/or hard copy format as set forth in the Agreement or the Owner's Special Conditions, and certified by A/E. Progress payments are made provisionally and do not constitute acceptance of work not in accordance with the Contract Documents. Owner will not process progress payment applications for Change Order Work until all parties execute the Change Order.

10.2.1 Preliminary Pay Worksheet. Once each month that a progress payment is to be requested, the Contractor shall submit to A/E and ODR a complete, clean copy of a preliminary pay worksheet or preliminary pay application, to include the following:

10.2.1.1 Contractor's estimate of the amount of Work performed, labor furnished and materials incorporated into the Work, using the established Schedule of Values;

10.2.1.2 An updated Work Progress Schedule including the executive summary and all required schedule reports;

10.2.1.3 HUB subcontracting plan Progress Assessment Report as required in Paragraph 4.2.5.1;

10.2.1.4 Such additional documentation as Owner may require as set forth in the elsewhere

in the Contract Documents; and

10.2.1.5 Construction payment affidavit.

10.2.2 Contractor's Application for Payment. As soon as practicable, but in no event later than seven (7) days after receipt of the preliminary pay worksheet, A/E and ODR will meet with Contractor to review the preliminary pay worksheet and to observe the condition of the Work. Based on this review, ODR and A/E may require modifications to the preliminary pay worksheet prior to the submittal of an Application for Payment, and will promptly notify Contractor of revisions necessary for approval. As soon as practicable, Contractor shall submit its Application for Payment on the appropriate and completed form, reflecting the required modifications to the Schedule of Values required by A/E and/or ODR. Attach all additional documentation required by ODR and/or A/E, as well as an affidavit affirming that all payrolls, bills for labor, materials, equipment, subcontracted work and other indebtedness connected with Contractor's Application for Payment are paid or will be paid within the time specified in Tex. Gov't Code, Chapter 2251. No Application for Payment is complete unless it fully reflects all required modifications, and attaches all required documentation including Contractor's affidavit.

10.2.3 Certification by Architect/Engineer. Within five (5) days or earlier following A/E's receipt of Contractor's formal Application for Payment, A/E will review the Application for Payment for completeness, and forward it to ODR. A/E will certify that the application is complete and payable, or that it is incomplete, stating in particular what is missing. If the Application for Payment is incomplete, Contractor shall make the required corrections and resubmit the Application for Payment for processing.

10.3 Owner's Duty to Pay. Owner has no duty to pay the Contractor except on receipt by ODR of: 1) a complete Application for Payment certified by A/E; 2) Contractor's updated Work Progress Schedule; and 3) confirmation that Contractor has maintained and updated the Record Documents kept at the Site.

10.3.1 Payment for stored materials and/or equipment confirmed by Owner and A/E to be on-site or otherwise properly stored is limited to eighty-five (85) percent of the invoice price or eighty-five (85) percent of the scheduled value for the materials or equipment, whichever is less.

10.3.2 Retainage. Owner will withhold from each progress payment, as retainage, five (5) percent of the total earned amount, the amount authorized by law, or as otherwise set forth in the Owner's Special Conditions. Retainage is managed in conformance with Tex. Gov't Code, Chapter 2252, Subchapter B.

10.3.2.1 Contractor shall provide written consent of its surety for any request for reduction or release of retainage.

10.3.2.2 At least sixty-five (65) percent of the Contract, or such other discrete Work phase as set forth in Subsection 12.1.6 or Work package delineated in the Contract Documents, must be completed before Owner can consider a retainage reduction or release.

10.3.2.3 Contractor shall not withhold retainage from their Subcontractors and suppliers in amounts that are any percentage greater than that withheld in its Contract with Owner under this subsection, unless otherwise acceptable to Owner.

10.3.3 Price Reduction to Cover Loss. Owner may reduce any Application for Payment, prior to payment to the extent necessary to protect Owner from loss on account of actions of Contractor including, but not limited to, the following:

10.3.3.1 Defective or incomplete Work not remedied;

10.3.3.2 Damage to Work of a separate Contractor;

10.3.3.3 Failure to maintain scheduled progress or reasonable evidence that the Work will not be completed within the Contract Time;

10.3.3.4 Persistent failure to carry out the Work in accordance with the Contract Documents;

10.3.3.5 Reasonable evidence that the Work cannot be completed for the unpaid portion of the Contract Sum;

10.3.3.6 Assessment of fines for violations of prevailing wage rate law; or

10.3.3.7 Failure to include the appropriate amount of retainage for that periodic progress payment.

10.3.4 Title to all material and Work covered by progress payments transfers to Owner upon payment.

10.3.4.1 Transfer of title to Owner does not relieve Contractor and its Subcontractors of the sole responsibility for the care and protection of materials and Work upon which payments have been made until final acceptance, or the restoration of any damaged Work, or waive the right of Owner to require the fulfillment of all the terms of the Contract.

10.4 Progress Payments. Progress payments to Contractor do not release Contractor or its surety from any obligations under the Contract.

10.4.1 Upon Owner's request, Contractor shall furnish manifest proof of the status of Subcontractor's accounts in a form acceptable to Owner.

10.4.2 Pay estimate certificates must be signed by a corporate officer or a representative duly authorized by Contractor.

10.4.3 Provide copies of bills of lading, invoices, delivery receipts or other evidence of the location and value of such materials in requesting payment for materials.

10.4.4 For purposes of Tex. Gov't Code § 2251.021(a)(2), the date the performance of service is complete is the date when ODR approves the Application for Payment.

10.5 Off-Site Storage. With prior approval by Owner and in the event Contractor elects to store materials at an off-site location, abide by the following conditions, unless otherwise agreed to in writing by Owner.

10.5.1 Store materials in a commercial warehouse meeting the criteria stated below.

10.5.2 Provide insurance coverage adequate not only to cover materials while in storage, but also in transit from the off-site storage areas to the Project Site. Copies of duly authenticated certificates of insurance, made out to insure the State agency which is signatory to the Contract, must be filed with Owner's representative.

10.5.3 Inspection by Owner's representative is allowed at any time. Owner's inspectors must be satisfied with the security, control, maintenance, and preservation measures.

10.5.4 Materials for this Project are physically separated and marked for the Project in a sectioned-off area. Only materials which have been approved through the submittal process are to be considered for payment.

10.5.5 Owner reserves the right to reject materials at any time prior to final acceptance of the complete

Contract if they do not meet Contract requirements regardless of any previous progress payment made.

10.5.6 With each monthly payment estimate, submit a report to ODR and A/E listing the quantities of materials already paid for and still stored in the off-site location.

10.5.7 Make warehouse records, receipts and invoices available to Owner's representatives, upon request, to verify the quantities and their disposition.

10.5.8 In the event of Contract termination or default by Contractor, the items in storage off-site, upon which payment has been made, will be promptly turned over to Owner or Owner's agents at a location near the jobsite as directed by ODR. The full provisions of performance and payment bonds on this Project cover the materials off-site in every respect as though they were stored on the Project Site.

10.6 Time for Payment by Contractor Pursuant to Tex. Gov't Code § 2255.022.

10.6.1 Contractor who receives a payment from a governmental entity shall pay Subcontractor the appropriate share of the payment not later than the tenth (10th) day after the date Contractor receives the payment.

10.6.2 The appropriate share is overdue on the eleventh (11th) day after the date Contractor receives the payment.

Article 11. Changes

11.1 Change Orders. A Change Order issued after execution of the Contract is a written order to Contractor, signed by ODR, Contractor, and A/E, authorizing a change in the Work or an adjustment in the Contract Sum or the Contract Time. The Contract Sum and the Contract Time can only be changed by Change Order. A Change Order signed by Contractor indicates his agreement therewith, including the adjustment in the Contract Sum and/or the Contract Time. ODR may issue a written authorization for Contractor to proceed with Work of a Change Order in advance of final execution by all parties in accordance with Section 11.9.

11.1.1 Owner, without invalidating the Contract and without approval of Contractor's Surety, may order changes in the Work within the general scope of the Contract consisting of additions, deletions or other revisions, and the Contract Sum and the Contract Time will be adjusted accordingly. All such changes in the Work shall be authorized by Change Order or ULCO, and shall be performed under the applicable conditions of the Contract Documents. If such changes cause an increase or decrease in Contractor's cost of, or time required for, performance of the Contract, an equitable adjustment shall be made and confirmed in writing in a Change Order or a ULCO.

11.1.2 Owner and Contractor acknowledge and agree that the Specifications and Drawings may not be complete or free from errors, omissions and imperfections and that they may require changes or additions in order for the Work to be completed to the satisfaction of Owner. Therefore, any minor errors, omissions or imperfections in the Specifications or Drawings, or any changes in or additions to the Specifications or Drawings to correct minor errors or omissions or to the Work ordered by Owner shall not constitute or give rise to any claim, demand or cause of action of any nature whatsoever in favor of Contractor, whether for breach of Contract, or otherwise. However, should the nature of the errors or omissions necessitate substantial changes in the Work such that a Change Order is appropriate, Owner shall be liable to Contractor for the sum stated to be due Contractor in any Change Order approved and signed by both parties. The sum established in any Change Order, together with any extension of time contained in said Change Order, shall constitute full compensation to Contractor for all costs, expenses and damages to Contractor for the changes in the Work described in the Change Order, as permitted under Tex.

Gov't Code, Chapter 2260.

11.1.3 Procedures for administration of Change Orders shall be established by Owner and stated in the Owner's Special Conditions, or elsewhere in the Contract Documents.

11.1.4 No verbal order, verbal statement, or verbal direction of Owner or his duly appointed representative shall be treated as a change under this article or entitle Contractor to an adjustment.

11.1.5 Contractor agrees that Owner or any of its duly authorized representatives shall have access and the right to examine any directly pertinent books, documents, papers, and records of Contractor. Further, Contractor agrees to include in all its subcontracts a provision to the effect that Subcontractor agrees that Owner or any of its duly authorized representatives shall have access to and the right to examine any directly pertinent books, documents, papers and records of such Subcontractor relating to any claim arising from the Contract, whether or not the Subcontractor is a party to the claim. The period of access and examination described herein which relates to appeals under the Disputes article of the Contract, litigation, or the settlement of claims arising out of the performance of the Contract shall continue until final disposition of such claims, appeals or litigation.

11.2 Unit Prices. If unit prices are stated in the Contract Documents or subsequently agreed upon and if the quantities originally contemplated in setting the unit prices are so changed in a Proposed Change Order that application of the agreed unit prices to the quantities of work proposed will cause substantial inequity to Owner or Contractor, the applicable unit prices shall be equitably adjusted as provided in the Owner's Special Conditions or as agreed to by the parties and incorporated into a Change Order.

11.3 Claims for Additional Costs.

11.3.1 If Contractor wishes to make a claim for an increase in the Contract Sum not related to a requested change, it shall give Owner and A/E written notice thereof within twenty-one (21) days after the occurrence of the event or discovery of any conditions giving rise to such claim. Contractor must notify Owner and A/E before proceeding to execute any Work considered to add additional cost or time, except in an emergency endangering life or property in which case Contractor shall act in accordance with Subsection 7.2.1., and failure to provide the required notice will invalidate any subsequent notice or claim for additional cost or time for the Work. If Owner and Contractor cannot agree on the amount of the adjustment in the Contract Sum, it shall be determined as set forth under Article 15. Any change in the Contract Sum resulting from such claim shall be authorized by a Change Order or a ULCO.

11.3.2 If Contractor claims that additional cost is involved because of, but not limited to, 1) any written interpretation of the Contract Documents, 2) any order by Owner to stop the Work pursuant to Article 14 where Contractor was not at fault, or 3) any written order for a minor change in the Work issued pursuant to Section 11.4, Contractor shall make such claim as provided in Subsection 11.3.1.

11.3.3 Should Contractor or his Subcontractors fail to call attention of A/E to discrepancies or omissions in the Contract Documents, but claim additional costs for corrective Work after Contract award, Owner may assume intent to circumvent competitive bidding for necessary corrective Work. In such case, Owner may choose to let a separate Contract for the corrective Work, or issue a ULCO to require performance by Contractor. Claims for time extensions or for extra cost resulting from delayed notice of patent Contract Document discrepancies or omissions will not be considered by Owner.

11.4 Minor Changes. A/E, with concurrence of ODR, will have authority to order minor changes in the Work not involving an adjustment in the Contract Sum or an extension of the Contract Time. Such changes shall be effected by written order which Contractor shall carry out promptly and record on the Record

Documents.

11.5 Concealed Site Conditions. Contractor is responsible for visiting the Site and being familiar with local conditions such as the location, accessibility, and general character of the Site and/or building. If, in the performance of the Contract, subsurface, latent, or concealed conditions at the Site are found to be materially different from the information included in the Contract Documents, or if unknown conditions of an unusual nature are disclosed differing materially from the conditions usually inherent in Work of the character shown and specified, ODR and A/E shall be notified in writing of such conditions before they are disturbed. Upon such notice, or upon its own observation of such conditions, A/E, with the approval of ODR, will promptly make such changes in the Drawings and Specifications as they deem necessary to conform to the different conditions, and any increase or decrease in the cost of the Work, or in the time within which the Work is to be completed, resulting from such changes will be adjusted by Change Order, subject to the prior approval of ODR.

11.6 Extension of Time. All changes to the Contract Time shall be made as a consequence of requests as required under Section 9.6, and as documented by Change Order as provided under Section 11.1.

11.7 Administration of Change Order Requests. All changes in the Contract shall be administered in accordance with procedures approved by Owner, and when required, make use of such electronic information management system(s) as Owner may employ.

11.7.1 Routine changes in the construction Contract shall be formally initiated by A/E by means of a PCO form detailing requirements of the proposed change for pricing by Contractor. This action may be preceded by communications between Contractor, A/E and ODR concerning the need and nature of the change, but such communications shall not constitute a basis for beginning the proposed Work by Contractor. Except for emergency conditions described below, approval of Contractor's cost proposal by A/E and ODR will be required for authorization to proceed with the Work being changed. Owner will not be responsible for the cost of Work changed without prior approval and Contractor may be required to remove Work so installed.

11.7.2 All proposed costs for change order Work must be supported by itemized accounting of material, equipment and associated itemized installation costs in sufficient detail, following the outline and organization of the established Schedule of Values, to permit analysis by A/E and ODR using current estimating guides and/or practices. Photocopies of Subcontractor and vendor proposals shall be furnished unless specifically waived by ODR. Contractor shall provide written response to a change request within twenty-one (21) days of receipt.

11.7.3 Any unexpected circumstance which necessitates an immediate change in order to avoid a delay in progress of the Work may be expedited by verbal communication and authorization between Contractor and Owner, with written confirmation following within twenty-four (24) hours. A limited scope not-to-exceed estimate of cost and time will be requested prior to authorizing Work to proceed. Should the estimate be impractical for any reason, ODR may authorize the use of detailed cost records of such work to establish and confirm the actual costs and time for documentation in a formal Change Order.

11.7.4 Emergency changes to save life or property may be initiated by Contractor alone (see Section 7.3) with the claimed cost and/or time of such work to be fully documented as to necessity and detail of the reported costs and/or time.

11.7.5 The method of incorporating approved Change Orders into the parameters of the accepted Schedule of Values must be coordinated and administered in a manner acceptable to ODR.

11.8 Pricing Change Order Work. The amounts that Contractor and/or its Subcontractor adds to a Change Order for profit and overhead will also be considered by Owner before approval is given. The amounts established hereinafter are the maximums that are acceptable to Owner.

11.8.1 For Work performed by its forces, Contractor will be allowed its actual costs paid for materials, the total amount of its actual wages paid for labor, plus its actual cost paid for ~~of~~ State and Federal payroll taxes and for ~~of~~ worker's compensation and comprehensive general liability insurance, plus its actual additional bond and builders risk insurance cost if the change results in an increase in the premium paid by Contractor. To the total of the above costs, Contractor will be allowed to add a percentage as noted below to cover overhead and profit combined. Overhead shall be considered to include insurance other than mentioned above, field and office supervisors and assistants, including safety and scheduling personnel, use of small tools, incidental job burdens and general Home Office expenses, and no separate allowance will be made therefore.

Allowable percentages for overhead and profit on changes will not exceed 15 percent if the total of self-performed work is less than or equal to $10,000, 10 percent if the total of self-performed work is between $10,000 and $20,000 and 7.5 percent if the total of self-performed work is over $20,000, for any specific change priced.

11.8.2 For subcontracted Work each affected Subcontractor shall figure its costs, overhead and profit as described above for Contractor's Work, all Subcontractor costs shall be combined, and to that total Subcontractor cost Contractor will be allowed to add a maximum mark-up of ten (10) percent if the total of all subcontracted work is less than or equal to $10,000, seven and half (7.5) percent if the total of all subcontracted work is between $10,000 and $20,000 and five (5) percent if the total of all subcontractor work is over $20,000.

11.8.3 On changes involving both additions and deletions, percentages for overhead and profit will be allowed only on the net addition. Owner does not accept and will not pay for additional Contract cost identified as indirect or consequential damages or as damages caused by delay.

11.8.4 For Contracts based on a Guaranteed Maximum Price (GMP), the Construction Manager-at-Risk or Design Builder shall NOT be entitled to a percentage mark-up on any Change Order Work unless the Change Order increases the Guaranteed Maximum Price.

11.9 Unilateral Change Order (ULCO). Owner may issue a written ULCO directing a change in the Work prior to reaching agreement with Contractor on the adjustment, if any, in the Contract price and/or the Contract Time.

11.9.1 Owner and Contractor shall negotiate for appropriate adjustments, as applicable, to the Contract Sum or the Contract Time arising out of a ULCO. As the changed Work is performed, Contractor shall submit its costs for such Work with its Application for Payment beginning with the next Application for Payment within thirty (30) days of the issuance of the ULCO. The Parties reserve their rights to dispute the ULCO amount, subject to Article 15.

11.10 Finality of Changes—Contractor. Upon execution of a Change Order and /or a ULCO by Owner, Contractor and A/E, all costs and time issues claimed by Contractor regarding that change are final and not subject to increase.

11.11 Audit of Changes—Owner. All Changes Orders are subject to audit by Owner or its representative at any time in accordance with Article 17.4 and Change Order amounts may be adjusted lower as a result of such audit.

Article 12. Project Completion and Acceptance

12.1 Closing Inspections.

12.1.1 Substantial Completion Inspection. When Contractor considers the entire Work or part thereof Substantially Complete, it shall notify ODR in writing that the Work will be ready for

Substantial Completion inspection on a specific date. Contractor shall include with this notice Contractor's Punchlist to indicate that it has previously inspected all the Work associated with the request for inspection, noting items it has corrected and included all remaining work items with date scheduled for completion or correction prior to final inspection. The failure to include any items on this list does not alter the responsibility of Contractor to complete all Work in accordance with the Contract Documents. If any of the items on this list prevents the Project from being used as intended, Contractor shall not request a Substantial Completion Inspection. Owner and its representatives will review the list of items and schedule the requested inspection, or inform Contractor in writing that such an inspection is premature because the Work is not sufficiently advanced or conditions are not as represented on Contractor's list.

12.1.1.1 Prior to the Substantial Completion inspection, Contractor shall furnish a copy of its marked-up Record Documents and a preliminary copy of each instructional manual, maintenance and operating manual, parts catalog, wiring diagrams, spare parts, specified written warranties, and like publications or parts for all installed equipment, systems, and like items as described in the Contract Documents. Delivery of these items is a prerequisite for requesting the Substantial Completion inspection.

12.1.1.2 On the date requested by Contractor, or as mutually agreed upon pending the status of the Open Items List, A/E, ODR, Contractor, and other Owner representatives as determined by Owner will jointly attend the Substantial Completion inspection, which shall be conducted by ODR or their delegate. If ODR concurs with the determination of Contractor and A/E that the Work is Substantially Complete, ODR will issue a Certificate of Substantial Completion to be signed by A/E, Owner, and Contractor establishing the date of Substantial Completion and identifying responsibilities for security, insurance and maintenance. A/E will provide with this certificate a list of Punchlist items (the pre-final Punchlist) for completion prior to final inspection. This list may include items in addition to those on Contractor's Punchlist, which the inspection team deems necessary to correct or complete prior to final inspection. If Owner occupies the Project upon determination of Substantial Completion, Contractor shall complete all corrective Work at the convenience of Owner, without disruption to Owner's use of the Project for its intended purposes.

12.1.2 Final Inspection. Contractor shall complete the list of items identified on the pre-final Punchlist prior to requesting a final inspection. Unless otherwise specified, or otherwise agreed in writing by the parties as documented on the Certificate of Substantial Completion, Contractor shall complete and/or correct all Work within thirty (30) days of the Substantial Completion date. Upon completion of the pre-final Punchlist work, Contractor shall give written notice to ODR and A/E that the Work will be ready for final inspection on a specific date. Contractor shall accompany this notice with a copy of the updated pre-final Punchlist indicating resolution of all items. On the date specified or as soon thereafter as is practicable, ODR, A/E and Contractor will inspect the Work. A/E will submit to Contractor a final Punchlist of open items that the inspection team requires corrected or completed before final acceptance of the Work.

12.1.2.1 Correct or complete all items on the final Punchlist before requesting Final Payment. Unless otherwise agreed to in writing by the parties, complete this work within seven (7) days of receiving the final Punchlist. Upon completion of the final Punchlist, notify A/E and ODR in writing stating the disposition of each final Punchlist item. A/E, Owner, and Contractor shall promptly inspect the completed items. When the final Punchlist is complete, and the Contract is fully satisfied according to the Contract Documents ODR will issue a certificate establishing the date of Final Completion. Completion of all Work is a condition precedent to Contractor's right to receive Final Payment.

12.1.3 Annotation. Any Certificate issued under this Article may be annotated to indicate that it is not

applicable to specified portions of the Work, or that it is subject to any limitation as determined by Owner.

12.1.4 Purpose of Inspection. Inspection is for determining the completion of the Work, and does not relieve Contractor of its overall responsibility for completing the Work in a good and competent fashion, in compliance with the Contract. Work accepted with incomplete Punchlist items or failure of Owner or other parties to identify Work that does not comply with the Contract Documents or is defective in operation or workmanship does not constitute a waiver of Owner's rights under the Contract or relieve Contractor of its responsibility for performance or warranties.

12.1.5 Additional Inspections.

12.1.5.1 If Owner's inspection team determines that the Work is not substantially complete at the Substantial Completion inspection, ODR or A/E will give Contractor written notice listing cause(s) of the rejection. Contractor will set a time for completion of incomplete or defective work acceptable to ODR. Contractor shall complete or correct all work so designated prior to requesting a second Substantial Completion inspection.

12.1.5.2 If Owner's inspection team determines that the Work is not complete at the final inspection, ODR or A/E will give Contractor written notice listing the cause(s) of the rejection. Contractor will set a time for completion of incomplete or defective work acceptable to ODR. Contractor shall complete or correct all Work so designated prior to again requesting a final inspection.

12.1.5.3 The Contract contemplates three (3) comprehensive inspections: the Substantial Completion inspection, the Final Completion inspection, and the inspection of completed final Punchlist items. The cost to Owner of additional inspections resulting from the Work not being ready for one or more of these inspections is the responsibility of Contractor. Owner may issue a ULCO deducting these costs from Final Payment. Upon Contractor's written request, Owner will furnish documentation of any costs so deducted. Work added to the Contract by Change Order after Substantial Completion inspection is not corrective Work for purposes of determining timely completion, or assessing the cost of additional inspections.

12.1.6 Phased Completion. The Contract may provide, or Project conditions may warrant, as determined by ODR, that designated elements or parts of the Work be completed in phases. Where phased completion is required or specifically agreed to by the parties, the provisions of the Contract related to closing inspections, occupancy, and acceptance apply independently to each designated element or part of the Work. For all other purposes, unless otherwise agreed by the parties in writing, Substantial Completion of the Work as a whole is the date on which the last element or part of the Work completed receives a Substantial Completion certificate. Final Completion of the Work as a whole is the date on which the last element or part of the Work completed receives a Final Completion certificate or notice.

12.2 Owner's Right of Occupancy. Owner may occupy or use all or any portion of the Work following Substantial Completion, or at any earlier stage of completion. Should Owner wish to use or occupy the Work, or part thereof, prior to Substantial Completion, ODR will notify Contractor in writing and identify responsibilities for security, insurance and maintenance Work performed on the premises by third parties on Owner's behalf does not constitute occupation or use of the Work by Owner for purposes of this Article. All Work performed by Contractor after occupancy, whether in part or in whole, shall be at the convenience of Owner so as to not disrupt Owner's use of, or access to occupied areas of the Project.

12.3 Acceptance and Payment

12.3.1 Request for Final Payment. Following the certified completion of all work, including all final Punchlist items, cleanup, and the delivery of record documents, Contractor shall submit a certified Application for Final Payment and include all sums held as retainage and forward to A/E and ODR for review and approval.

12.3.2 Final Payment Documentation. Contractor shall submit, prior to or with the Application for Final Payment, final copies of all Close-Out documents, maintenance and operating instructions, guarantees and warranties, certificates, Record Documents and all other items required by the Contract. Contractor shall submit evidence of return of access keys and cards, evidence of delivery to Owner of attic stock, spare parts, and other specified materials. Contractor shall submit consent of surety to Final Payment form and an affidavit that all payrolls, bills for materials and equipment, subcontracted work and other indebtedness connected with the Work, except as specifically noted, are paid, will be paid, after payment from Owner or otherwise satisfied within the period of time required by Tex. Gov't Code, Chapter 2251. Contractor shall furnish documentation establishing payment or satisfaction of all such obligations, such as receipts, releases and waivers of claims and liens arising out of the Contract. Contractor may not subsequently submit a claim on behalf of Subcontractor or vendor unless Contractor's affidavit notes that claim as an exception.

12.3.3 Architect/Engineer Approval. A/E will review a submitted Application for Final Payment promptly but in no event later than ten (10) days after its receipt. Prior to the expiration of this deadline, A/E will either: 1) return the Application for Final Payment to Contractor with corrections for action and resubmission; or 2) accept it, note their approval, and send to Owner.

12.3.4 Offsets and Deductions. Owner may deduct from the Final Payment all sums due from Contractor. If the Certificate of Final Completion notes any Work remaining, incomplete, or defects not remedied, Owner may deduct the cost of remedying such deficiencies from the Final Payment. On such deductions, Owner will identify each deduction, the amount, and the explanation of the deduction on or by the twenty-first (21st) day after Owner's receipt of an approved Application for Final Payment. Such offsets and deductions shall be incorporated via a final Change Order, including a ULCO as may be applicable.

12.3.5 Final Payment Due. Final Payment is due and payable by Owner, subject to all allowable offsets and deductions, on the thirtieth (30th) day following Owner's approval of the Application for Payment. If Contractor disputes any amount deducted by Owner, Contractor shall give notice of the dispute on or before the thirtieth (30th) day following receipt of Final Payment. Failure to do so will bar any subsequent claim for payment of amounts deducted.

12.3.6 Effect of Final Payment. Final Payment constitutes a waiver of all claims by Owner, relating to the condition of the Work except those arising from:

12.3.6.1 Faulty or defective Work appearing after Substantial Completion (latent defects);

12.3.6.2 Failure of the Work to comply with the requirements of the Contract Documents;

12.3.6.3 Terms of any warranties required by the Contract, or implied by law; or

12.3.6.4 Claims arising from personal injury or property damage to third parties.

12.3.7 Waiver of Claims. Final payment constitutes a waiver of all claims and liens by Contractor except those specifically identified in writing and submitted to ODR prior to the application for Final Payment.

12.3.8 Effect on Warranty. Regardless of approval and issuance of Final Payment, the Contract is not deemed fully performed by Contractor and closed until the expiration of all warranty periods.

Article 13. Warranty and Guarantee

13.1 Contractor's General Warranty and Guarantee. Contractor warrants to Owner that all Work is executed in accordance with the Contract, complete in all parts and in accordance with approved practices and customs, and of the required finish and workmanship. Contractor further warrants that unless otherwise specified, all materials and equipment incorporated in the Work under the Contract are new. Owner may, at its option, agree in writing to waive any failure of the Work to conform to the Contract, and to accept a reduction in the Contract price for the cost of repair or diminution in value of the Work by reason of such defect. Absent such a written agreement, Contractor's obligation to perform and complete the Work in accordance with the Contract Documents is absolute and is not waived by any inspection or observation by Owner, A/E or others, by making any progress payment or final payment, by the use or occupancy of the Work or any portion thereof by Owner, at any time, or by any repair or correction of such defect made by Owner.

13.2 Warranty Period. Except as may be otherwise specified or agreed, Contractor shall repair all defects in materials, equipment, or workmanship appearing within one year from the date of Substantial Completion of the Work. If Substantial Completion occurs by phase, then the warranty period for ~~that~~ the Work performed for each phase begins on the date of Substantial Completion of that phase, or as otherwise stipulated on the Certificate of Substantial Completion for the particular phase.

13.3 Limits on Warranty. Contractor's warranty and guarantee hereunder excludes defects or damage caused by:

13.3.1 Modification or improper maintenance or operation by persons other than Contractor, Subcontractors, or any other individual or entity for whom Contractor is not responsible, unless Owner is compelled to undertake maintenance or operation due to the neglect of Contractor.

13.3.2 Normal wear and tear under normal usage after acceptance of the Work by Owner.

13.4 Events Not Affecting Warranty. Contractor's obligation to perform and complete the Work in a good and workmanlike manner in accordance with the Contract Documents is absolute. None of the following will constitute an acceptance of Work that is not in accordance with the Contract Documents or relieve the Contractor from its obligation to perform the Work in accordance with the Contract Documents:

13.4.1 Observations by Owner and/or A/E;

13.4.2 Recommendation to pay any progress or final payment by A/E;

13.4.3 The issuance of a certificate of Substantial Completion or any payment by Owner to Contractor under the Contract Documents;

13.4.4 Use or occupancy of the Work or any part thereof by Owner**;**

13.4.5 Any acceptance by Owner or any failure to do so;

13.4.6 Any review of a Shop Drawing or sample submittal; or

13.4.7 Any inspection, test or approval by others.

13.5 Separate Warranties. If a particular piece of equipment or component of the Work for which the Contract requires a separate warranty is placed in continuous service before Substantial Completion, the warranty period for that equipment or component will not begin until Substantial Completion, regardless of any warranty agreements in place between suppliers and/or Subcontractors and Contractor. ODR will certify the date of service commencement in the Substantial Completion certificate.

13.5.1 In addition to Contractor's warranty and duty to repair, Contractor expressly assumes all warranty obligations required under the Contract for specific building components, systems and equipment.

13.5.2 Contractor may satisfy any such obligation by obtaining and assigning to Owner a complying warranty from a manufacturer, supplier, or Subcontractor. Where an assigned warranty is tendered and accepted by Owner which does not fully comply with the requirements of the Contract, Contractor remains liable to Owner on all elements of the required warranty not provided by the assigned warranty.

13.6 Correction of Defects. Upon receipt of written notice from Owner, or any agent of Owner designated as responsible for management of the warranty period, of the discovery of a defect, Contractor shall promptly remedy the defect(s), and provide written notice to Owner and designated agent indicating action taken. In case of emergency where delay would cause serious risk of loss or damage to Owner, or if Contractor fails to remedy within thirty (30) days, or within another period agreed to in writing, Owner may correct the defect and be reimbursed the cost of remedying the defect from Contractor or its surety.

Article 14. Suspension and Termination

14.1 Suspension of Work for Cause. Owner may, at any time without prior notice, suspend all or any part of the Work if, after reasonable observation and/or investigation, Owner determines it is necessary to do so to prevent or correct any condition of the Work which constitutes an immediate safety hazard or which may reasonably be expected to impair the integrity, usefulness or longevity of the Work when completed.

14.1.1 Owner will give Contractor a written notice of suspension for cause, setting forth the reason for the suspension and identifying the Work suspended. Upon receipt of such notice, Contractor shall immediately stop the Work so identified. As soon as practicable following the issuance of such a notice, Owner will initiate and complete a further investigation of the circumstances giving rise to the suspension, and issue a written determination of the findings.

14.1.2 If it is confirmed that the cause was within the control of Contractor, Contractor will not be entitled to an extension of time for delay resulting from the suspension. If the cause is determined not to have been within the control of Contractor, and the suspension has prevented Contractor from completing the Work within the Contract Time, the suspension is an excusable delay and a time extension will be granted through a Change Order.

14.1.3 Suspension of Work under this provision will be no longer than is reasonably necessary to remedy the conditions giving rise to the suspension.

14.2 Suspension of Work for Owner's Convenience. Upon seven (7) days written notice to Contractor, Owner may at any time without breach of the Contract suspend all or any portion of the Work for a period of up to sixty (60) days for its own convenience. Owner will give Contractor a written notice of suspension for convenience, which sets forth the number of suspension days for which the Work, or any portion of it, and the date on which the suspension of Work will cease. When such a suspension prevents Contractor from completing the Work within the Contract Time, it is an excusable delay. A notice of suspension for convenience may be modified by Owner at any time on seven (7) days written notice to Contractor. If Owner suspends the Work for its convenience for more than sixty (60) consecutive days, Contractor may elect to terminate the Contract pursuant to the provisions of the Contract.

14.3 Termination by Owner for Cause.

14.3.1 Upon thirty (30) days written notice to Contractor and its surety, Owner may, without prejudice to any right or remedy, terminate the Contract and take possession of the Site and of all materials, equipment, tools, construction equipment, and machinery thereon owned by Contractor under any of the following circumstances:

14.3.1.1 Persistent or repeated failure or refusal, except during complete or partial suspensions of work authorized under the Contract, to supply enough properly skilled workmen or proper materials;

14.3.1.2 Persistent disregard of laws, ordinances, rules, regulations or orders of any public authority having jurisdiction, including ODR;

14.3.1.3 Persistent failure to prosecute the Work in accordance with the Contract, and to ensure its completion within the time, or any approved extension thereof, specified in the Contract;

14.3.1.4 Failure to remedy defective work condemned by ODR;

14.3.1.5 Failure to pay Subcontractors, laborers, and material suppliers pursuant to Tex. Gov't Code, Chapter 2251;

14.3.1.6 Persistent endangerment to the safety of labor or of the Work;

14.3.1.7 Failure to supply or maintain statutory bonds or to maintain required insurance, pursuant to the Contract;

14.3.1.8 Any material breach of the Contract; or

14.3.1.9 Contractor's insolvency, bankruptcy, or demonstrated financial inability to perform the Work.

14.3.2 Failure by Owner to exercise the right to terminate in any instance is not a waiver of the right to do so in any other instance.

14.3.3 Upon receipt of a termination notice, the Contractor or its Surety has thirty (30) days to cure the reasons for the termination or demonstrate to the satisfaction of the Owner that it is prepared to remedy to the condition(s) upon which the notice of termination was based with diligence and promptness. If the Owner is satisfied that the Contractor or its Surety can remedy the reasons for the termination and complete the Work as required, the notice of termination shall be rescinded in writing by the Owner and the Work shall continue without an extension of time.

14.3.4 If at the conclusion of the thirty (30) day cure period the Contractor or its Surety is unable to demonstrate to the satisfaction of the Owner its ability to remedy the reasons for termination, the Owner may immediately terminate the employment of the Contractor, make alternative arrangements for completion of the Work and deduct the cost of completion from the unpaid Contract Sum.

14.3.4.1 Owners cost to complete the Work includes, but is not limited to, fees for additional services by A/E and other consultants, and additional contract administration costs.

14.3.4.2 Owner will make no further payment to Contractor or its surety unless the costs to complete the Work are less than the Contract balance, then the difference shall be paid to Contractor or its surety. If such costs exceed the unpaid balance, Contractor or its surety will pay the difference to Owner.

14.3.4.3 This obligation for payment survives the termination of the Contract.

14.3.4.4 Owner reserves the right in termination for cause to take assignment of all the Contracts between Contractor and its Subcontractors, vendors, and suppliers. ODR will promptly notify Contractor of the contracts Owner elects to assume. Upon

receipt of such notice, Contractor shall promptly take all steps necessary to effect such assignment.

14.4 Conversion to Termination for Convenience. In the event that any termination of Contractor for cause under Section 14.3 is later determined to have been improper, the termination shall automatically convert to a termination for convenience under Section 14.5 and Contractor's recovery for termination shall be strictly limited to the payments allowable under Section 14.5.

14.5 Termination for Convenience of Owner. Owner reserves the right, without breach, to terminate the Contract prior to, or during the performance of the Work, for any reason. Upon such an occurrence, the following shall apply:

14.5.1 Owner will notify Contractor and A/E in writing specifying the reason for and the effective date of the Contract termination. The notice may also contain instructions necessary for the protection, storage or decommissioning of incomplete work or systems, and for safety.

14.5.2 Upon receipt of the notice of termination, Contractor shall immediately proceed with the following obligations, regardless of any dispute in determining or adjusting any amounts due at that point in the Contract:

14.5.2.1 Stop all work.

14.5.2.2 Place no further subcontracts or orders for materials or services.

14.5.2.3 Terminate all subcontracts for convenience.

14.5.2.4 Cancel all materials and equipment orders as applicable.

14.5.2.5 Take appropriate action that is necessary to protect and preserve all property related to the Contract which is in the possession of Contractor.

14.5.3 When the Contract is terminated for Owner's convenience, Contractor may recover from Owner payment for all Work executed. Contractor may not claim lost profits or lost business opportunities.

14.6 Termination By Contractor. If the Work is stopped for a period of ninety (90) days under an order of any court or other public authority having jurisdiction, or as a result of an act of government, such as a declaration of a national emergency making materials unavailable, through no act or fault of Contractor or Subcontractor or their agents or employees or any other persons performing any of the Work under a contract with Contractor, then Contractor may, upon thirty (30) additional days written notice to ODR, terminate the Contract and recover from Owner payment for all Work executed, but not lost profits or lost business opportunities. If the cause of the Work stoppage is removed prior to the end of the thirty (30) day notice period, Contractor may not terminate the Contract.

14.7 Settlement on Termination. When the Contract is terminated for any reason, at any time prior to one hundred eighty (180) days after the effective date of termination, Contractor shall submit a final termination settlement proposal to Owner based upon recoverable costs as provided under the Contract. If Contractor fails to submit the proposal within the time allowed, Owner may unilaterally determine the amount due to Contractor because of the termination and pay the determined amount to Contractor.

Article 15. Dispute Resolution

15.1 Unresolved Contractor Disputes. To the extent that it is applicable, the dispute resolution process provided for in Tex. Gov't Code, Chapter 2260, shall be used by Contractor to resolve any claim for breach of Contract made by Contractor that is not resolved under procedures described in these Uniform General Conditions or Owner's Special Conditions of the Contract.

15.2 Alternative Dispute Resolution Process. Owner may establish a dispute resolution process to be utilized in advance of that outlined in Tex. Gov't Code, Chapter 2260.

15.3 Nothing herein shall hinder, prevent, or be construed as a waiver of Owner's right to seek redress on any disputed matter in a court of competent jurisdiction.

15.4 In any litigation between the Owner and the Contractor arising from this Contract or this Project, neither party will be entitled to an award of legal fees or costs in any judgment regardless which one is deemed the prevailing party.

15.5 Nothing herein shall waive or be construed as a waiver of the State's sovereign immunity.

Article 16. Certification of No Asbestos Containing Material or Work

16.1 Contractor shall insure that Texas Department of State Health Services licensed individuals, consultants or companies are used for any required asbestos work including asbestos inspection, asbestos abatement plans/specifications, asbestos abatement, asbestos project management and third-party asbestos monitoring.

16.2 Contractor shall provide a notarized certification to Owner that all equipment and materials used in fulfillment of its Contract responsibilities are non-Asbestos Containing Building Materials (ACBM). This certification must be provided no later than Contractor's application for Final Payment.

16.3 The Contractor shall insure compliance with the following acts from all of his subcontractors and assigns:

- Asbestos Hazard Emergency Response Act (AHERA—40 CFR 763-99 (7));
- National Emission Standards for Hazardous Air Pollutants (NESHAP—EPA 40 CFR 61, Subpart M—National Emission Standard for Asbestos;
- Texas Asbestos Health Protection Rules (TAHPR—Tex. Admin. Code Title 25, Part 1, Ch. 295C, Asbestos Health Protection

Article 17. Miscellaneous

17.1 Owner's Special Conditions. When the Work contemplated by Owner is of such a character that the foregoing Uniform General Conditions of the Contract cannot adequately cover necessary and additional contractual relationships, the Contract may include Owner's Special Conditions that relate to the Project. In the event of a conflict between the UTUGCs and the Owner's Special Conditions, the Owner's Special Conditions will govern.

17.2 Federally Funded Projects. On Federally funded projects, Owner may waive, suspend or modify any Article in these Uniform General Conditions which conflicts with any Federal statue, rule, regulation or procedure, where such waiver, suspension or modification is essential to receipt by Owner of such Federal funds for the Project. In the case of any Project wholly financed by Federal funds, any standards required by the enabling Federal statute, or any Federal rules, regulations or procedures adopted pursuant thereto, shall be controlling.

17.3 Internet-based Project Management Systems. At its option, Owner may administer its design and construction management through an Internet-based management system. In such cases, Contractor shall conduct communication through this media and perform all Project related functions utilizing this database system. This includes correspondence, submittals, Requests for Information, vouchers or payment requests and processing, amendment, Change Orders and other administrative activities.

17.3.1 Accessibility and Administration.

17.3.1.1 When used, Owner will make the software accessible via the Internet to all Project

team members.

17.3.1.2 Owner shall administer the software.

17.3.2 Training. When used, Owner shall provide training to the Project team members.

17.4 Right to Audit.

17.4.1 Contractor understands that acceptance of funds under this Contract acts as acceptance of the authority of the State Auditor's Office, Owner, any successor agency and their representatives, including independent auditors, to conduct an audit or investigation in connection with those funds. Contractor further agrees to cooperate fully with any party conducting the audit or investigation, including providing all records requested.

17.4.2 Contractor shall maintain and retain supporting fiscal and any other documents relevant to showing that any payments under this Contract funds were expended in accordance with the terms of this Contact, the requirements of Owner, and with the laws and regulations of the State of Texas including, but not limited to, requirements of the Comptroller of the State of Texas and the State Auditor. Contractor shall maintain all such documents and other records relating to this Contract and Owner's property for a period of four (4) years after the date of submission of a request for Final Payment or until a resolution of all billing questions, whichever is later. Contractor shall make available at reasonable times and upon reasonable notice and for reasonable periods all documents and other information related to the Work of this Contract.

17.4.3 Contractor shall ensure that this clause concerning the authority to audit funds received indirectly by subcontractors through the Contractor and the requirement to cooperate is included in any subcontract it awards.

17.5 179 D Benefit Allocation. Owner may decide to seek the allocation of certain tax benefits pursuant to Section 179D of the Internal Revenue Code of 1986, as amended, (the "Code") through its Agreement with Contractor

If the Owner and the Internal Revenue Service (IRS) determine that the Contractor is eligible to receive the 179D deduction allocation as a "Designer" for the purposes of Section 179D of the Code or that Contractor could otherwise profit financially from the monetization of the benefit (separately and collectively, the "Rebate"), Contractor hereby agrees to allocate to the Owner a portion of the Rebate in an amount to be determined and contracted for on mutually agreeable terms when the value of the Rebate becomes ascertainable, net of associated costs realized by the Owner and Project Architect. At its sole discretion, the Owner shall determine whether to receive its portion of the Rebate in cash, discounted Contractor fees or both.

Owner reserves the right to retain a third-party consultant (the "Consultant") to manage and administer the process of obtaining and monetizing the Rebate derived from the Project(s).

Contractor agrees to cooperate in all reasonable respects with the Consultant's efforts to obtain and monetize any such Rebates derived from the Project(s) on behalf of the Owner. Certification of eligibility and negotiation of the Rebates should be facilitated by the Owner's 179D Consultant.

17.6 Force Majeure. Neither Owner nor Contractor will be liable or responsible to the other for any loss or damage or for any delays or failure to perform due to causes beyond its reasonable control including acts of God, strikes, epidemics, war, riots, flood, fire, sabotage, or any other circumstances of like character.

17.7 Confidentiality and Safeguarding of Owner Records; Press Releases; Public Information. Under the Contract, Contractor may (1) create, (2) receive from or on behalf of Owner, or (3) have access to, Owner records or record systems (collectively, "Owner Records"). Contractor represents, warrants, and agrees that it will: (1) hold all Owner Records in strict confidence and will not use or disclose Owner Records except as (a) permitted or required by the Contract, (b) required by Applicable Laws, or (c) otherwise

authorized by Owner in writing; (2) safeguard Owner Records according to reasonable administrative, physical and technical standards that are no less rigorous than the standards by which Contractor protects its own confidential information; and (3) comply with the Owner's rules, policies, and procedures regarding access to and use of Owner's computer systems. At the request of Owner, Contractor agrees to provide a written summary of the procedures Contractor uses to safeguard and maintain the confidentiality of Owner Records.

17.7.1 Notice of Impermissible Use. If an impermissible use or disclosure of any Owner Records occurs, Contractor will provide written notice to University within one (1) business day after Contractor's discovery of that use or disclosure. Contractor will promptly provide Owner with all information requested by University regarding the impermissible use or disclosure.

17.7.2 Return of University Records. Contractor agrees that within thirty (30) days after the expiration or termination of the Contract, for any reason, all Owner Records created or received from or on behalf of University will be (1) returned to Owner, with no copies retained by Contractor; or (2) if return is not feasible, destroyed following twenty (20) days written notice to the Owner. Contractor will confirm in writing the destruction of any Owner Records.

17.7.3 Disclosure. If Contractor discloses any Owner Records to a subcontractor or agent, Contractor will require the subcontractor or agent to comply with the same restrictions and obligations as are imposed on Contractor by this Section.

17.7.4 Press Releases. Except as required by the Contract, Contractor will not make any press releases, public statements, or advertisement referring to the Project or the engagement of Contractor as an independent contractor of Owner in connection with the Project or release any information relative to the Project for publication, advertisement or any other purpose without the prior written approval of Owner.

17.7.5 Public Information. Owner strictly adheres to all statutes, court decisions and the opinions of the Texas Attorney General with respect to disclosure of public information under the *Texas Public Information Act* ("TPIA"), Chapter 552, *Texas Government Code*. In accordance with Section 552.002 of TPIA and Section 2252.907, *Texas Government Code*, and at no additional charge to Owner, Contractor will make any information created or exchanged with Owner pursuant to this Contract that is not otherwise exempt from disclosure under TPIA available in a format reasonably requested by Owner that is accessible by the public.

17.8 Domestic Iron and Steel Requirement. Pursuant to Sections 2252.201-2252.205 of the Government Code, Contractor shall require that any iron or steel product produced through a manufacturing process and used in the Project is produced in the United States will require that the bid documents provided to all bidders and the contract include this same requirement.

End of U.T. System Uniform General Conditions

EXHIBIT B

OWNER'S DIVISION 00 AND DIVISION 01 SPECIFICATIONS

Section 00 25 00 Attachment A Attachment B Attachment C	Owner's Special Conditions Prevailing Wage Determination Facilities Planned Utility Outage Policy Project Sign Layout
Section 00 73 16	Project Insurance (OCIP)
Section 01 31 00	Project Administration
Section 01 32 00	Project Planning and Scheduling
Section 01 35 16	Alteration Project Procedures
Section 01 35 23	Project Safety (OCIP)
Section 01 35 25	Owner Safety Requirements
Section 01 45 00	Project Quality Control
Section 01 57 23	Temporary Storm Water Pollution Control
Section 01 57 25	Dust Control Plan
Section 01 77 00	Project Close-out Procedures
Section 01 78 39	Project Record Documents
Section 01 78 46	Maintenance Materials
Section 01 79 00	Demonstration and Training
Section 01 89 23	Site HVAC Utilities Performance Requirements
Section 01 91 00	General Commissioning Requirements

SECTION 00 25 00 – OWNER'S SPECIAL CONDITIONS

PART 1 - GENERAL

1.01 RELATED DOCUMENTS

A. Drawings and general provisions of the Contract, including General Conditions and Division 01 Specification Sections, apply to this Section.

B. Specifications throughout all Divisions of the Project Manual are directly applicable to this Section, and this Section is directly applicable to them.

C. Contractor's attention is specifically directed, but not limited, to the Uniform General and Supplementary General Conditions for University of Texas System Building Construction Contracts (UTUGC) for other requirements.

D. Attachment "A" (To Owner's Special Conditions) – Minimum Wage Rate Determination. Pursuant to the UTUGC, the attached schedule identifies the Prevailing Wage Rate determination as applicable to the Project location.

E. Attachment "B" (To Owner's Special Conditions) – Facilities Planned Utility Outages Policy.

F. Attachment "C" (To Owner's Special Conditions) - Project Sign Layout. [May not be applicable to all Projects].

G. Attachment "D" (To Owner's Special Conditions) - Bastrop Visitation and Tour Policy Statement and Medical Documentation Requirements. [Applicable to Bastrop Projects only].

1.02 SUMMARY

A. Terms and conditions set forth in this document are for Contractor only, and are valid regardless of the project delivery method. For Construction Manager at Risk or Design/Build, the final version of the document shall be confirmed by Owner, and included by the Construction Manager or Design/Build Contractor in the Guaranteed Maximum Price Proposal. For projects for which the construction phase is divided into multiple stages, these Owner's Special Conditions shall be reviewed, updated as warranted, and resubmitted with GMP Proposal associated with that stage of the construction work.

1.03 REFERENCE STANDARDS

A. The latest published edition of a reference shall be applicable to this Project unless identified by a specific edition date.

B. All reference amendments adopted prior to the effective date of this Contract shall be applicable to this Project.

C. All materials, installation and workmanship shall comply with all applicable requirements and standards.

D. Texas Medical Center Architectural Standards and Texas Medical Center Stormwater Management Design Guidelines are applicable to all Projects located within the Texas Medical Center.

E. Owner's underwriter requirements are applicable to all Projects.

1.04 DEFINITIONS

A. The term "Owner's Project Manager" as used throughout the Contract Documents means an individual authorized by Owner to administer the Project.

B. Outage - A temporary disruption of normal operation or use of utilities, sidewalks, parking areas, driveways or facility access.

C. Planned Utility Outage - An event that can be foreseen and has a plan of action in place to accomplish specific tasks during a utility outage.

D. Utility - Any service provided by an outside source or manufactured in house (gas, water, electricity, fire suppression water, telecommunications, data systems, building automation systems, fire alarm systems, etc.) which facilitates building operations.

E. The terms "outage" and "shutdown" are used interchangeably throughout the Contract Documents.

F. Work Day - A day in which work is planned, excluding weekends and holidays.

G. The terms "work day" and "business day" are used interchangeably throughout the Contract Documents.

H. Normal working hours are considered as work being performed between 6:00 A.M. and 6:00 P.M. Monday through Friday, excluding holidays.

I. The terms "normal hours" and "regular hours" are used interchangeably throughout the Contract Documents.

J. Weather Day – A "weather day" is a day on which Contractor's current schedule indicates Work is to be done, and on which inclement weather occurs and resultant site conditions or inaccessibility to the site prevent Contractor from performing five hours of Work associated with the Project's critical activities during normal working hours.

1.05 OWNER'S RIGHT OF OCCUPANCY

A. Owner may occupy or use all or any portion of the Work following Substantial Completion, or at any earlier stage of completion. Should Owner wish to use or occupy the Work, or part thereof, prior to Substantial Completion, Owner's Project Manager will notify Contractor in writing and identify responsibilities for security, maintenance, and insurance.

B. Work performed on the premises by third parties on Owner's behalf does not constitute occupation or use of the Work by Owner for purposes of this Article.

C. All Work performed by Contractor after occupancy, whether in part or in whole, shall be at the convenience of Owner so as to not disrupt Owner's use of, or access to occupied areas of the project.

D. Contractor shall follow the Planned Utility Outage Procedure specified within this section when performing Work affecting any occupied facility.

1.06 MINIMUM WAGE RATE DETERMINATION

A. Contractor shall comply with all requirements of Texas Government Code Chapter 2258, Prevailing Wage Rates.

B. Wage rates identified in Attachment “A” (To Owner’s Special Conditions) are titled “Prevailing Wage Determination, dated December 31, 2009.

C. Owner may verify wage rate compliance in the field by interviewing workers. Contractor shall assist the Construction Inspector (CI) with this task, including providing translation for non-English speaking workers.

1.07 WEATHER DAYS

A. Weather days are excusable delays. When weather conditions at the site prevent work from proceeding, immediately notify Owner’s Project Manager for confirmation of the conditions. At the end of each calendar month, submit to Owner’s Project Manager a list of Weather Days occurring in that month along with documentation of the impact on critical activities. Based on confirmation by Owner’s Project Manager, any time extension granted will be issued by Change Order. If Contractor and Owner cannot agree on the time extension, Owner may issue a Unilateral Change Order for fair and reasonable time extension.

1.08 SEPARATE CONTRACTS

A. As provided in the UTUGC, Owner may award other contracts for other portions of the Project. Additional separate contracts may include information technology and communications equipment installation, commissioning, and security system equipment installation and commissioning.

PART 2 - PRODUCTS

2.01 GENERAL

A. All materials shall meet or exceed all applicable referenced standards, federal, state and local requirements, and conform to codes and ordinances of authorities having jurisdiction.

2.02 ALTERNATES – **NOT USED**

2.03 OWNER’S SPECIAL CASH ALLOWANCES – **NOT USED**

2.04 OWNER-PROVIDED BUILDER’S RISK

A. Owner intends to provide builder’s risk insurance for this project. Refer to Article 17 of the Agreement for additional information.

B. Construction Manager’s and each Subcontractor’s attention is hereby directed to Specification Section 00 73 16, *Project Insurance (OCIP)*, for more detailed requirements.

2.05 TEMPORARY FIELD OFFICE STRUCTURES, FURNISHINGS AND EQUIPMENT

A. Contractor shall coordinate and direct the Work of the Project from the Site.

B. Contractor shall provide and maintain at least one (1) temporary field office that is adequately staffed, furnished, and equipped.

C. All arrangements for temporary field offices shall be **submitted to Owner for approval prior to set-up**. Costs for temporary field office(s) shall be included in Contractor's Schedule of Values Breakdown and included with Contractor's regular monthly Progress Payment. Contractor shall coordinate with the Owner for furniture needs. Owner has attic stock furnishings that can be utilized by Contractor for the field office setup.

D. Temporary field office(s) shall be secure, weather-tight, well-lighted, air-conditioned, heated, and shall include provisions for telephones, copier, facsimile machines, internet connection services, conference area(s), functioning toilet facilities, and maintenance of all Project files.

1. Contractor shall provide weekly janitorial services for all temporary field office(s) including, but not limited to, supplying and servicing of toilet facilities.

E. Temporary field office(s) shall have adequate and safe entries, including steps with railings and landings or stoops as required, and shall provide hard surface walkways to connect the field office structures to one another and to site entry or exit.

F. Conference areas shall include at least one (1) primary area suitable for up to fifteen (15) persons to participate in Project progress and coordination meetings. The walls of this conference area are to serve as display surfaces for maintaining current prints of Work Progress Schedules and work placement plans.

G. Contractor shall provide and maintain temporary field office(s) until Final Completion, unless Owner expressly agrees otherwise, and shall remove temporary field office(s) only after obtaining concurrence from Owner.

H. Contractor shall provide and maintain at least one (1) new (not refurbished) temporary field office for Owner, as approved by Owner, for a period from the Notice to Proceed for Construction to Final Completion, unless Owner expressly agrees otherwise, and is only to be removed with concurrence of Owner.

I. Contractor shall provide field office(s) and storage shed/trailer accommodations as necessary for the major Subcontractor(s) to adequately perform their respective work.

J. All storage sheds/trailers shall be secure and weather-tight for the storage of tools and all materials, which may be damaged by the weather. All storage-shed floors shall be raised at least six inches above finished grade.

2.06 TOILET FACILITIES

A. In addition to toilet facilities required within construction trailers, Contractor shall provide toilet facilities for workers at the Site, shall post notices, and take such precautions as may be necessary. Refer to Section 01 35 23 - Project Safety, for additional requirements.

B. Contractor shall provide toilet facilities from Notice to Proceed until Final Completion that comply with OSHA regulations and as required herein. Toilet facilities shall comply with all applicable State and local regulations. Quantity, type, and location of facilities shall be subject to acceptance by Owner.

C. Contractor shall service, clean, and sanitize toilet facilities at least daily and as frequently as necessary to maintain them in a safe, clean, and sanitary condition. Contractor shall maintain at the Site, a record of the servicing, cleaning, and sanitizing of the facilities for the duration of the Project.

D. The use of toilet facilities installed under this Project and/or existing campus facilities is not allowed unless prior written approval has been obtained from Owner.

If Owner authorizes the use of specific campus toilet facilities, Contractor shall assure all persons employed on the Project use only authorized toilet facilities. Contractor shall post notices and take such precautions as may be necessary to assure compliance.

E. Toilet Facilities: Portable field toilet facilities shall conform to ANSI Z4.3 and shall comply with the following:

1. There shall be a toilet paper holder and an adequate supply of toilet paper. If the facility is intended for use by female workers, there shall be a disposal receptacle for sanitary napkins.

2. The toilet facility shall afford the user privacy and protection from weather and from falling objects.

3. There shall be a self-closing door that can be locked from inside the toilet facility.

4. The toilet facility shall be illuminated by natural or artificial light and adequately ventilated.

5. A sign shall indicate if the toilet facility is intended for use by males only or by females only.

6. Toilet facilities shall be located so as to be conveniently accessible to employees working on the Site, but not so close to the Work location as to cause a nuisance to those employees or any adjacent areas.

F. Where the Project extends over multiple floor levels, toilet facilities shall be located at least at each fifth floor so that workers do not have to walk more than two floors to reach the facilities.

2.07 PROJECT FENCING

A. Contractor and Subcontractors shall confine their activities to the Site and in no way obstruct any other part of the campus or utilize any campus facilities for any purpose.

1. Upon mobilization, Contractor shall build a substantial wire mesh fence (or other type fence) as directed by Owner, at least six (6) feet high as shown on the site plan, completely surrounding the Site. Posts shall be placed not more than eight (8) feet apart and securely set in the ground. Wire mesh shall be tightly stretched over the supports.

2. The Site fencing shall include emergency service and trucking gates in locations shown on the site plan. The gates shall be hung with heavy strap hinges and hasps for locking. Contractor shall properly maintain fences and gates shall be properly maintained until Substantial Completion, and only removed with concurrence from Owner.

2.08 PROJECT COMMUNICATIONS PLAN

A. Depending upon the project, Owner may develop a Project Communications Plan to inform Owner's faculty, employees, patients, visitors, and others concerning construction activities affecting them. Contractor shall participate and support this effort as required by Owner. Typical support by Contractor may include attendance at communications meetings, preparation of graphic and narrative construction impact updates, and the furnishing of targeted signage.

2.09 PROJECT SIGNAGE

A. For new construction, Contractor shall provide signage in accordance with the Project Communications Plan and construct and erect one (1) Project sign on the Site in a location designated by Owner. The sign shall be constructed as instructed by Owner. Refer to Attachment "B" (To Owner's Special Conditions).

B. Contractor shall submit a one-quarter-scale shop drawing of the sign, including all lettering, to Owner for approval prior to installation. The sign shall remain the property of Owner, and upon Final Completion, Contractor shall remove the sign and deliver it to a location designated by Owner.

C. For renovation projects, signage shall be in accordance with the Project Communications Plan or as directed by Owner.

D. All hazard warning signage shall be OSHA 29 CFR Part 1926 compliant. All signs shall be prominently displayed at all entrances to the Site. Postings must be constructed of a durable material that will resist wear and damage.

E. Additional Contractor or Subcontractor signs or advertisements shall not be erected without Owner's written approval.

2.10 TEMPORARY WATER

A. Contractor shall provide temporary lines for all water required during the Project and shall make arrangements with Owner's Administrative Facilities and Campus Operations Department for water service. This shall include all means of conveying and the necessary metering devices. In lieu of temporary connections, with Owner's approval, Contractor may make permanent connections and such may serve for the construction period.

B. In the event water is not available at the Site from Owner's existing distribution system, Contractor shall negotiate with the local distributor for water and pay all fees and rates required by the local water utility.

2.11 TEMPORARY POWER AND LIGHTING

A. Contractor shall make arrangements with Owner or the local utility company for temporary construction power. If power is available only through Owner's system, Contractor shall make arrangements for and provide metering equipment. Contractor may energize the permanent power system in the building only when approved by Owner.

B. Contractor shall provide adequate lighting about the Site for security, inspections of excavations, night shift work should such occur, and shall also provide adequate temporary interior lighting throughout the building enclosure to facilitate quality workmanship and appropriate inspection conditions.

C. Contractor shall ensure, and shall use emergency power equipment and connections if necessary to ensure, adequate lighting for egress and life safety.

2.12 TEMPORARY MECHANICAL SERVICES

A. If temporary heating, cooling, ventilation or humidity control equipment is required for protection of the Work or for implementation of indoor air quality measures, Contractor shall provide Owner-approved equipment and proper operation such that no Work shall be damaged or life safety compromised.

B. All equipment and filters shall be maintained in good operation and all filters and controls shall be changed as a result of damage or expiration to ensure acceptable air quality. If necessary, all equipment must have current certifications.

C. After the permanent mechanical equipment has been installed and connected to the local chilled water and steam distribution systems, the equipment may be operated by Contractor to heat or cool the building if acceptable to Owner. Contractor must flush and clean all new mechanical piping systems before connecting to local systems.

D. During operation of the mechanical equipment, prior to achieving Substantial Completion, Contractor shall keep the mechanical equipment in good operating condition, properly maintained, including cleaning and changing of all filters. New, non-construction filters shall be installed prior to Owner's acceptance of the mechanical equipment. The warranty period shall start for the respective equipment as delineated in the UTUGC.

2.13 REMOVAL OF TEMPORARY FACILITY

A. When a temporary facility is no longer needed for the proper conduct of the Work, Contractor shall completely remove it from the Project and shall repair or replace any material, equipment, or finished surface damaged in doing so.

2.14 PROJECT PARKING

A. Contractor is responsible for securing adequate parking for Contractor's employees. Parking of Contractor's vehicles at the Site shall be as approved by Owner. Contractor shall maintain at least two (2) marked parking spaces at the Site for Owner's representatives.

PART 3 - EXECUTION

3.01 PARTNERING

A. Owner desires to create a cohesive team for this project, to include all primary parties. Contractor and its primary Subcontractors shall join Owner and the rest of the Project Team in project "Partnering" as a means of achieving success. The Partnering process is entirely voluntary and Owner and Contractor shall equally share all costs with no impact to the Construction Contract price. The results of the workshop are not legally binding, but do represent a commitment by the parties to work together cooperatively toward common goals.

3.02 CONTRACTOR SITE ACCESS AND LIMITS OF CONSTRUCTION

A. Upon authorization to mobilize, Contractor shall submit a plan layout showing location of field offices, size and arrangement of spaces, fencing, site control points, and utility tie-in locations for Owner review.

B. All Project personnel shall confine and limit their work and use of the Site to those areas within the defined limits of construction. All public and Owner rules, laws and requirements shall be obeyed and enforced by Contractor. No tools, construction vehicles, or construction material other than those in transit, shall be permitted beyond the Site limits of construction, including Owner's existing mechanical, plumbing, and electrical rooms, equipment rooms, and storage rooms.

C. All campus roads, drives, and fire lanes as well as all sidewalks and pedestrian routes, other than those specifically indicated to be in Contractor's area of control, must be kept open at all times. Contractor shall proactively schedule and obtain security clearance for all significant material deliveries, vehicle traffic, street closures, cranes, concrete trucks, etc., through and around the campus and Site.

3.03 PROJECT SURVEYING

A. Contractor shall employ an experienced and competent Professional Surveyor to establish at least three (3) separate permanent bench marks, to which easy access may be had during the progress of the Work, and from time to time to determine and verify the lines and grades. As the Work progresses establish easily accessible benchmarks at each level referenced to finish floor line.

1. Level or Transit: Contractor shall maintain an accurate level or transit at the site at all times. This instrument shall be used to verify lines, grades, etc., and shall be available at all times for use by the Architect/Engineer and Owner. A level shall be used to layout all Work and shall be used by operators skilled in the instrument's use.

2. Contractor shall erect and maintain substantial and braced batter boards at all corners of structures, set their location to provide proper working clearance and verify that they are level and at the proper grade.

3. As the Work progresses, Contractor shall lay out partitions on the floor in exact locations as a guide to all contractors and trades.

4. Before ordering any materials or doing any Work, Contractor or appropriate Subcontractor shall verify and be responsible for the correctness of all measurements. No extra charge or compensation shall be allowed on account of difference between actual dimensions and the measurements indicated on the drawings. Any differences, which may be found, shall be submitted to the Architect/Engineer for consideration before proceeding with the Work.

3.04 ON-GOING CAMPUS OPERATIONS

A. The Project is surrounded by and/or adjacent to continuously functioning campus facilities, including patient care, academic, and research efforts. Contractor shall make every effort to avoid disruptions to ongoing campus activities and to maintain a safe environment for patients, students, faculty, and staff in the areas adjacent to the Project.

B. Contractor shall obtain all Owner's in-house approvals and permits. Operation of utilities and building systems must not be interrupted except when scheduled and approved in advance through established channels. Contractor should be always mindful and proactive with regard to containment of noise, fumes, dust and debris.

3.05 CONTRACTOR'S RESPONSIBILITY OF THE PROJECT WORKFORCE

A. Contractor is responsible for the actions of the entire Project workforce, including, but not limited to, Subcontractors' and suppliers' employees, whenever they are on the campus. Contractor shall submit a plan for identifying and controlling all workers, and for management of personnel records, including payroll records. Identification badges for workers, busing of workers from remote parking lot(s), written and verbal reminders to workforce of appropriate behavior and avoidance of campus facilities, and publishing of established access and egress routes for vehicular and pedestrian traffic are required, as a minimum, in order to maintain control of the work force.

1. Unacceptable behavior on the part of a worker anywhere on campus, including parking lots, the Site, and the accessing route(s) through the Site and through the campus, or failure to obtain parking permits, or traffic violations while on campus may lead to cancellation of any Owner provided parking. Identifiable offending worker(s) shall be permanently removed from the Project.

2. Harassment of any person, whether a patient, student, faculty, staff, or visitor to the campus, is strictly forbidden. Harassment includes any action such as jeering, whistling, calling-out, staring, snickering, making rude or questionable comments, or similar behavior. Identifiable offending worker(s) will be removed from the Project.

3.06 SECURITY

A. Contractor is responsible for security of the Project. The University of Texas Police Department will not provide security for Contractor's areas unless under Project-specific agreement and terms of compensation.

B. Contractor shall secure the Site at nights and weekends, or when no work is being performed, to prevent the entry of unauthorized personnel. Locks shall be of an approved type and have special keying as required by Owner. Keys for all door locks shall be made available to The University of Texas Police Department. All doors accessing the construction site shall be properly latched and have closers to maintain closed doors at all times. All doors accessing the construction site shall have MD Anderson standard construction signage, provided by Owner's Project Manager, to ensure that only authorized construction personnel access the site.

C. Contractor shall not retain the services of outside guard or law enforcement services in connection with Work on campus without the specific prior written approval of the Chief of The University of Texas Police Department.

3.07 PROTECTION OF WORK

A. Contractor shall properly and effectively protect all materials and equipment furnished during and after installation. Building materials, Contractor's equipment, etc., may be stored on the premises, but the placing of it shall be within the construction fence. When any room in the building is used as a shop, store room, etc., Contractor shall be held responsible for any repairs, patching, or cleaning arising from such use. Contractor shall protect and be responsible for any damage to Contractor's Work or material, from the date of the agreement until the final payment is made, and shall make good without cost to Owner, any damage or loss that may occur during this period. Contractor shall handle all material as directed, so that the Architect/Engineer's representative may inspect it. All material affected by weather shall be covered and protected to keep it free from damage while being transported to the Site and while stored on the Site.

1. During the execution of the Work, open ends of all piping and conduit, and all openings in equipment shall be closed when Work is not in progress, and shall be capped and sealed prior to completion of final connections, so as to prevent the entrance of foreign matter.

2. All heating, ventilating, plumbing and electrical equipment shall be protected during the execution of the Work. All ductwork and equipment shall be sealed with heavy plastic and tape to prevent build-up of items such as dust, mold, and debris.

3. All ductwork and air handling mechanical equipment shall be wiped down with a damp cloth immediately before installation to ensure complete removal of accumulated dusts and foreign matter.

4. All plumbing fixtures shall be protected and covered so that no one can use them. All drains shall be covered until placed in service to prevent the entrance of foreign matter.

5. Contractor shall protect trees and shrubs within the Site assigned to be saved and maintained, with strong open slat fences at least six (6) feet high, completely surrounding them, all maintained in sound condition until Owner gives Contractor permission for removal. Contractor shall not remove, cut, or trim any trees or shrubs without Owner's written approval, unless specifically identified on the approved Construction Documents.

3.08 PLANNED UTILITY OUTAGE PROCEDURE

A. Contractor shall not activate or de-activate any campus system, or component of any such system, without express written direction from Owner.

B. Contractor shall schedule and obtain facilities approval for any necessary outage of campus utilities planning for a minimum of fifteen (15) work days in advance through Owner's Project Manager, using Owner provided "Contractor's Request for Utility Shutdown" form and process. All outages shall be performed outside the normal working hours or as determined by Owner.

3.09 NOISE CONTROL

A. Contractor shall coordinate equipment locations and timing or sequence of work operations so as to avoid conflict with Owner's continuing use of adjacent buildings and/or avoid any interference with Owner's scheduled meetings, events, or business activities.

3.10 TEMPORARY SHORING

A. Contractor shall provide all temporary shoring required for the installation of Work. Contractor assumes all responsibility for this work and shall repair any damage caused by improper supports or failure of shoring in any respect. Any provisions that are installed to assure the stability of adjacent structures, trees, roadways, or infrastructure, shall be in accordance with the plans provided by Contractor.

3.11 CUTTING, PATCHING, AND INSTALLATION OF SLEEVES

A. If cutting and/or patching of holes or openings is required for the execution of the Work, Contractor shall consult with the Architect/Engineer prior to the commencement of any cutting and/or patching. Contractor shall leave all chases, holes, or openings straight, true, and of proper size as may be necessary for the proper installation of Work.

1. No excessive cutting of the structure shall be permitted, nor shall any piers or other structural members be cut without the written approval of the Architect/Engineer. After such Work has been installed, Contractor shall carefully fit around, close up, repair, patch, and point-up as directed to the entire satisfaction of the Architect/Engineer.

2. All cutting and patching for utility penetrations shall be done carefully, with proper tools by qualified workers, without additional cost to Owner. Contractor shall build into the Work, as indicated on the Plans and/or Specifications, any and all items furnished by others. Cutting and repairing of work in place, as a result of negligence by Contractor, shall be paid for by the party at fault.

3. The Work performed within each Section of the Specifications, unless otherwise indicated in the Plans and/or Specifications, includes all cutting, patching, and digging for work in that trade section required for proper accommodations of work of other trades. Execute such work with competent workers skilled in trade required for restoration. Contractor shall arrange and pay for cutting and patching required for installation of Contractor's Work.

4. Contractor shall seal penetrations through all rated partitions, walls and floors with U.L. tested assemblies to provide and maintain a rating equal to or greater than the partition, wall or floor. In addition, Contractor shall seal penetrations through all floors to provide and maintain a watertight installation.

3.12 ASBESTOS ABATEMENT

A. In the event Contractor encounters material reasonably believed to be asbestos at the Site, Contractor shall immediately stop work in the area affected and report the condition to Owner. If in fact the material is asbestos and has not been abated, Contractor shall not resume the non-asbestos-related Work in the affected area until the asbestos has been abated.

B. The abatement action may be performed in any of three ways, as Owner may decide. Owner may perform the abatement by Owner's own forces, or Owner may contract with a third party to perform the abatement, or Contractor may perform the abatement by an appropriate means acceptable to Owner such as performing the Work through Contractor's own employees if they are appropriately certified or by hiring an abatement subcontractor.

C. If Contractor is to perform the abatement, Owner and Contractor will negotiate a change order in accordance with the contract terms relative to extra work. In such a case, Owner specifically agrees that the cost of any special comprehensive general liability insurance that may be required relative to the abatement Work will be considered a direct cost of the extra work, on which, like the other direct costs, Contractor will be allowed to add the applicable markup per the UTUGC.

3.13 CONTRACTOR LICENSURE

A. Contractor shall ensure that a Master Plumber licensed with the State of Texas directly supervises all plumbing Work. At least one plumber holding a State of Texas journeyman license shall be present at each Site during any plumbing Work.

B. Contractor shall ensure that Contractor's mechanical subcontractor is licensed with the State of Texas to install all HVAC Work.

C. Contractor shall ensure that a Master Electrician licensed with the State of Texas directly supervises all electrical Work. At least one electrician holding a State of Texas journeyman license shall be present at each Site involving Electrical Work.

3.14 SAFETY PRECAUTIONS AND PROGRAMS

A. MD Anderson Environmental Health and Safety (EH&S) has the authority to take intervening action in the event it deems patient, visitor, or staff of MD Anderson are in danger. Contractor shall adhere to requirements stated in Section 01 35 25 - Owner Safety Requirements.

B. Contractors shall familiarize themselves with, receive required training on, and abide by all policies and procedures of MD Anderson and any governmental body [i.e. NFPA, OSHA, EPA, TDLR (Texas Department of Licensing and Regulation), TCEQ (Texas Commission on Environmental Quality), etc.] having authority to control the manner and/or methods of completing the tasks contained in the Contract.

3.15 TEST, ADJUST, AND BALANCE

A. Owner may hire a Test, Adjust, and Balance firm. If Owner directly hires a Test, Adjust, and Balance firm, Contractor shall support the firm's efforts to perform work as required.

3.16 MISCELLANEOUS

A. All gas lines that are involved with the Project must have ends capped with proper cap and sealant, even if valves are locked off.

B. Contractor shall install temporary equipment in such a manner that finish work will not be damaged by smoke, falling mortar, concrete, or other causes. Location and arrangement of temporary equipment shall be subject to the approval of Owner's Project Manager.

C. Change Room Facilities:

1. Where workers are required to change clothes and wear special protective clothing to work with toxic or dangerous substances, an appropriate facility for decontamination, separate from other sanitary and washing accommodations shall be provided. In these cases, change room facilities shall be duplicated and storage shall be provided for protective clothing in one room and for personal clothing in the other.

2. Protective clothing and personal clothing shall not come into contact with each other or be stored in the same facilities. Protective clothing and work clothing, which may have become wet by the process of decontamination, must be stored in a separate, well-ventilated area.

3. Change rooms shall be gender separated and provided with inside and outside locking mechanisms.

3.17 SITE AND AREA MAINTENANCE

A. A thorough cleanup of the Site and the Site's surroundings is required no less than once per week or more often as directed by Owner. Contractor shall be responsible to ensure that the debris and trash resulting from site operations are removed from the building and the property on a daily basis. Solid debris, such as brick bats, mortar and plaster droppings, may not be dumped on the grounds about the Site. All combustible material including scrap from lumber, crating, excelsior, paper, and similar types of trash shall be removed from the building site on a daily basis. Trash shall not to be allowed to accumulate.

B. Contractor shall not allow food to be consumed or food wastes to accumulate at the Site in an effort to eliminate pests and insects.

C. Contractor shall be required to clean all streets of mud, dirt, dust, debris, and construction material produced during Contractor's construction activities on a daily basis. Contractor shall repair any damage to existing streets, parking, facilities, and any other area of the Site, including areas used for lay down or storage.

3.18 OPERATING AND MAINTENANCE MANUALS

A. Certain requirements of the UTUGC are supplemented by Section 01 77 00 – Project Closeout Procedures.

3.19 RECORD DOCUMENTS

A. Certain requirements of the UTUGC are supplemented by Section 01 78 39 – Project Record Documents.

3.20 SHOP DRAWINGS AND SUBMITTALS

A. Certain requirements of the UTUGC are supplemented by Section 01 31 00 – Project Administration.

END OF SECTION 00 25 00

ATTACHMENT "A"
(to Owner's Special Conditions)
MINIMUM WAGE RATE DETERMINATION

The University of Texas System is the contracting agency for this construction project. The following statute requires the contracting agency to specify the generally minimum rates of wages in contracts that are bid.

Government Code 2258
"Construction of Public Works in State and
Municipal or Political Subdivisions; Prevailing
Wage Rates to be maintained"
and
The Uniform General Conditions
for University of Texas System Building Construction Contracts

Pursuant to the requirements of this statute, we have determined that the following rates of wages are paid to various classifications of workers in the locality of this project.

Total hourly compensations to each worker must equal or exceed the minimum wage rates stated in the following attachment. Contributions by a worker toward health, pension, vacation, and the like are part of the worker's pay; contributions by the employer are not. Any dollar amounts shown in columns for health, pension, and vacation may be paid either in cash or in kind. Workers in classifications where rates are not identified shall be paid not less than the general minimum rate of "laborer" for the various classifications of work therein listed.

All hours of work over 40 hours per week are overtime and will be compensated at the rate of 1 and ½ times the regular wage.

Trainees/helpers, where not otherwise specified above, may be compensated at a rate determined mutually by the worker and employer, commensurate with the experience and skill of the worker but a rate not less than 60% of the journeyman's wage or less than the Laborers (General) rate. At no time shall a journeyman supervise more than two of apprentices, trainees or helpers. All apprentices/trainees/helpers shall be under the direct supervision of a journeyman working as a crew.

ATTACHMENT A
PREVAILING WAGE DETERMINATION
HOUSTON/GALVESTON AREA

The University of Texas System
Office of Facilities Planning and Construction

Date: June 30, 2015
Construction Type: Building
Area: Houston-Galveston

Building Construction Trade Classification	Prevailing Wage Rate
Carpenter	$15.00
Concrete Finisher	$15.75
Drywall/Ceiling Installer	$14.50
Electrician	$17.00
Elevator Mechanic	$30.04
Fire Proofing Installer	$15.00
Flooring Installer	$20.00
Glazier	$16.91
Heavy Equipment Operator	$16.00
Ironworker	$17.00
Laborer	$10.50
Light Equip Operator/Driver	$15.00
Mason/Bricklayer	$18.00
Painter	$14.25
Pipefitter	$17.72
Piping/Ductwork Insulator	$15.00
Plumber	$19.99
Roofer	$14.00
Sheetmetal Worker	$18.00
Sprinkler Fitter	$19.20
Tile Setter	$15.00
Waterproofer	$15.00

Notes:

1. Wages shown are for entry level, minimum wages for each classification and do not include fringe benefits.

2. Unlisted classifications needed for work not included within the scope of the classifications listed may not be added after award. The job classifications are not inclusive of all possible trades on the construction project.

3. It is the responsibility of the contractor to classify the worker in accordance with the published classifications and demonstrate that workers are paid commensurate with determined rates.

THE UNIVERSITY OF TEXAS
MD Anderson Cancer Center
Making Cancer History®

UTMDACC INSTITUTIONAL POLICY # ADM1131

FACILITIES PLANNED UTILITY OUTAGES POLICY

PURPOSE

The purpose of the policy is to define roles and responsibilities for requesting, coordinating, scheduling, and executing Planned Utility Outages.

POLICY STATEMENT

It is the policy of The University of Texas MD Anderson Cancer Center (MD Anderson) to establish and maintain a consistent process for requesting, coordinating, and executing Planned Utility Outages.

SCOPE

This policy applies to all faculty, trainees/students, and other members of MD Anderson's workforce and addresses MD Anderson-owned campus utilities systems and Utility systems in rented or leased property under the responsibility of MD Anderson (*e.g.,* life safety, fire alarm systems).

Compliance with this policy is the responsibility of all faculty, trainees/students, and other members of MD Anderson's workforce.

TARGET AUDIENCE

The target audience for this policy includes, but is not limited to, all faculty, trainees/students, and other members of MD Anderson's workforce, including Facilities Management (FM) Project Managers, FM Operations and Maintenance (O&M) Staff, Contractors, and Stakeholders who request a Scheduled Utility Outage for:

- New construction.
- Renovation.
- Maintenance.

DEFINITIONS

Business Day: First full day of outage starts the clock for the timeline.

Contractor/Vendor: An individual or company hired to perform tasks on MD Anderson campuses but who does not receive wages directly from MD Anderson payroll.

Customer: Any faculty member, trainee/student, or other member of MD Anderson's workforce or any Contractor who may be affected by the Utility outage.

Energy Source: Any source of electrical, mechanical, hydraulic, pneumatic, thermal, or other energy.

Facilities Work Notification: A notification associated with Utility work or work in an area that customer operations will not be impacted by. Customers will notice fire alarm strobes and audible alarms.

FM Director: Facilities staff member responsible for managing a property/building and approving Utility outages affecting its operations, excluding fire detection and fire suppression outages.

FM Onsite Outage Manager: Facilities personnel responsible for managing the Planned Utility Outage execution. This person must be listed in the official outage e-mail notification.

FM Project Manager: Facilities personnel who manage construction/renovation projects.

FOC Outage Coordination Group: Facilities Management personnel responsible for guiding MD Anderson-approved personnel through the procedures outlined in this policy.

Hours of Operation: Outage coordinators will process Outage Requests from 6:30 a.m. - 3:30 p.m.

Large Project: A project that is estimated to have a significant number of outages during the course of the project.

Mission Area: Groups within Facilities Management that conducts technical investigations in clinical, research and administrative facilities spaces.

Outage Coordinator: Coordinates the FOC Outage Coordination Group.

Outage Request: A form that is used to collect pertinent information and to initiate the process for a planned/unplanned interruption of the normal/expected operation environment of the facility.

Outage Request System: A system that is used to collect and capture all data associated with the requisition and completion of a Planned/Unplanned Utility Outage.

Planned Utility Outage: A foreseen interruption of a Utility flow to an end user. Planned Utility Outages have a plan of action to accomplish specific tasks during the event and all parties have outlined end user affects.

Requestor: An MD Anderson workforce member or his/her approved designee who is authorized to input or generate Utility Outage Requests in the Utility outage system.

Scheduled Outage: An outage is considered "scheduled" whenever the outage coordinator sends the final e-mail notification of approval (e-mail includes the outage date/time and pertinent details).

Shop Response: An outage system document completed by the Technical Investigator that documents the impact and further defines the scope of the Utility outage.

Stakeholders: Facilities Management staff/clients/end users, including Contractors/Vendors, who have participated in the planning, implementation, and execution of a Utility outage or will be affected by the event.

Technical Investigator: A Facilities Management staff member who is responsible for investigating the impact of the Outage Request and preparing the Shop Response.

Unplanned Utility Outage: An unforeseen interruption that has occurred or is currently in progress relative to a Utility failure or building component breakdown. Unplanned outages are by nature urgent. There is no timeline compliance.

Utility: Any service provided by an outside source or manufactured in-house that facilitates building operations (*e.g.,* gas, water, electricity, fire suppression water, fire alarm systems).

Work Notification: An Outage Request that is downgraded that should not affect end users. Work Notifications could also function as a form of communication to inform end users and O&M of work going on in their areas.

PROCEDURE

1.0 Request Outage

1.1 The Requestor will submit a completed Outage Request form through the Outage Request System.

Note: Refer to the **Appendix A - Summary of Outage Schedule Procedure Timeline** for typical timelines for executing outages in all MD Anderson buildings based on the scope of the outage, as determined by the request description (initial level) and Shop Response (final level).

1.2 The Outage Coordinator will accept an Outage Request Form and ensure that it is forwarded to a Technical Investigator.

Note: A returned/rejected Outage Request Form must be re-submitted.

1.3 Mission Areas must generate a work order in the computerized maintenance management system (CMMS) and indicate “outage” as the Work Type, along with the most appropriate Asset Number for the associated equipment involved in the outage.

Note: Time and expenses must be assigned, as appropriate, to the work order.

1.4 Outage Requests received after 3:00 p.m. will be processed the next Business Day.

1.5 All unplanned outages must be captured in the outage database and have an associated work order.

1.6 All floor plans and drawings should be attached by Requestor if traffic flows are affected. Drawing will be required for Interim Life Safety Measures (ILSM) investigations.

2.0 Evaluate Outage

2.1 The Technical Investigator will determine the scope and impact of the Outage Request and make note if another craft / Shop Response is required for the outage in the Shop Response form.

2.2 The Technical Investigator will review historical outages for the affected equipment before the field investigation and will validate current conditions.

2.3 The Technical Investigator will complete and submit the Shop Response in the Outage Request System.

2.4 Environmental Health and Safety (EH&S) will review and respond to all Outage Requests that may impact life safety systems (*e.g.,* sprinkler, fire alarm, egress paths) and perform an ILSM evaluation.

2.5 The Outage Coordinator will perform an initial review for the terms “fire,” “emergency,” “egress,” and “life safety systems.” If any of these terms are present, the Outage Request will be forwarded to EH&S. The final ILSM assessment and plan will be determined by EH&S.

2.6 Project management is encouraged to provide dedicated contract staff for Large Projects to investigate (*e.g.,* Shop Responses) to expedite outages.

2.7 Work Notifications will be handled as follows:

A. The Outage Request will be turned into a Work Notification if the potential for impact to stakeholders or building tenants is non-existent.

B. The mission area’s Technical Investigator will complete an assessment of impacts on the Customer and building before indicating “No Impact” as a response to the Outage Coordinator.

C. If the Work Notification requires an interruption of Utility service, an outage will be implemented, per the proper procedure, to reduce risk to the Stakeholders and operations.

Examples of Utility Work Notifications include but are not limited to:

- Hot Taps (e.*g.,* domestic water).
- Turning off Energy Source to equipment that is not in service.
- “Hot” Electrical Work (*e.g.,* installing breakers or bus plugs in a hot panel or riser).
- Utilities that have redundant sources (*e.g.,* domestic water tanks, pumps, heat exchangers).
- Testing of systems (*e.g.,* fire detection systems, fire pump tests, fire alarm function testing).
- Load shed testing.
- Uninterrupted Power Supply (UPS) and equipment on UPS.
- Corridors.
- Driveways.

2.8 The Shop Response must include the possible impact description as well as a timeframe for restoration of Utility or work area. End users and O&M must be made aware of the possible impact in case of failure of redundant system/equipment. End user(s) and O&M must have some say of the date and time it may take place.

2.9 Lockout/tag-out and/or live work must be indicated in a check box on the Shop Response form.

3.0 Coordinate Outage

3.1 The Outage Coordinator will review the Shop Response(s) and establish the final level of the outage as well as the date and time for the outage after communicating and coordinating with the personnel impacted by the outage and consulting with group requesting the outage.

3.2 The Outage Coordinator will obtain approval from the FM Property Manager / Director for the final scheduled date and time of the outage.

Note: EH&S will approve fire alarms and fire sprinkler systems.

3.3 The Outage Coordinator will send the final Facility Outage Notification via e-mail of the approved outage to Stakeholders and Customers.

Note: This Facility Outage Notification e-mail makes the outage an officially Scheduled Utility Outage. The FM Onsite Outage Manager and their one up, FM PM and Contractor PM must be listed with proper contact information if applicable.

3.4 The Requestor will notify Contractors/Vendors when the outage schedule is official and will provide them with all the pertinent information.

For a complex outage, it is recommended that the Requestor and Contractor do a pre-outage walk-through to confirm that the outage will occur as scheduled.

3.5 The Outage Coordinator(s), Mission Area, and Stakeholders will meet, as needed, to discuss outages, review requested and Scheduled Utility Outages, and review the status of all Shop Response requests.

3.6 The Outage Coordinator schedules and executes a Planned Utility Outage.

3.7 FM and/or designated Contractor personnel will execute the outage.

3.8 The FM Director, and/or his/her designee, will approve the cancellation of the outage prior to the execution of the outage or the extension of the outage if appropriate.

3.9 The FM Onsite Outage Manager will notify the Facility Operations Center (FOC) (Monitoring Services) via radio or e-mail if the work has been completed.

3.10 The FOC or the Outage Coordinator will notify Stakeholders if an outage has been cancelled or extended.

3.11 The FOC will log completed and cancelled outages in the Outage Request system.

3.12 Outage coordinator will schedule outage only after all EH&S actions are completed. See Utility Outage Process Flow.

3.13 Fire and life Safety outages:

ILSM Shop Responses will not be required if the words “commission,” “inspection,” or “testing” are part of the description in the Outage Request. A new ILSM Shop Response will be required if the date and or time changes for the outage.

3.14 Pre-construction meetings should be held with O&M and Outage Coordination ASAP to assure that any predetermined outages list be communicated so that these outages may fall within Outage Scheduling Procedure Timeline.

3.15 A project event that affects Facility operations or an event that was not forecasted but still must be completed immediately to keep the project moving towards completion requires an

Outage Request. Some of these outages may be requested on short notice, but will be tracked and reflected in the monthly metrics report. (See **Appendix A - Summary of Outage Schedule Procedure Timeline**.)

4.0 Cancellations

4.1 If situations require the outage to be cancelled or rescheduled, the FM Project Manager / FM Director / FM on-site manager and/or their designee are responsible for cancelling an outage after it has been approved and before it is executed.

4.2 The FOC and Outage Coordinators will communicate cancellations as follows:

A. During normal Hours of Operation:

Outage Coordinator issues a cancellation notice under the direction of the FM Project Manager / FM Director or on-site manager one-up.

B. After normal Hours of Operation:

The FOC issues a cancellation notice under the direction of the FM Project Manager / FM Director / on-site manager one up.

Note: If outage is executed by a Contractor and the PM is not available, the Contractor should call the FOC with the outage number so the FOC may contact the affected parties.

C. All Stakeholders will be notified of the cancellation.

4.3 Reasons for cancellations:

A. Outage scope of work change after request has been submitted.

B. Incorrect information found on the original request. Location/Utility etc.

C. Operational need to cancel the outage.

D. Date or time change.

E. Weather.

Outage cancellation approval must be given by a one-up staff member, so the loss of time and preparation are considered for each outage.

4.4 ILSM-related Outages:

If a change in scope, date, time, Contractor, etc. is needed before the outage notification is e-mailed, the Outage Coordinator:

A. In the existing software:

- Makes changes to existing outage.
- Informs all who submitted Shop Response of the changes and asks if their Shop Response is still valid.
- Requests new ILSM (24-hour turn around).

B. In new software:

- Cancels existing outage.
- Informs all who submitted Shop Responses and asks if existing Shop Response is still valid. If so, copies and pastes form old outage to new outage. If not, requests new Shop Responses.
- Notifies FLSPM of original ILSM and requests new ILSM (24-hour turn around).

If a change in scope, date, time, Contractor, etc. is needed after the outage notification is e-mailed and:

C. Change was made by Contractor (*e.g.,* no show, late, wrong equipment):

The outage is cancelled, and a new outage must be requested according to policy timeframes as related to outage complexity.

D. Change was made by MDACC personnel (*e.g.,* O&M unavailable due to emergency):

The outage is cancelled, and a new outage must be requested with a three-day turnaround time.

4.5 Outage extensions:

Outage extensions must be verbally communicated to the FOC/Outage coordinators by the appropriate mission area or department authorized outage approver. The FOC/Outage coordinators will then notify all groups associated with this outage (via e-mail).

5.0 Unplanned Utility Outages

5.1 Requests and Shop Responses are requested immediately or soon after (when appropriate).

5.2 Life safety measures must be considered very early in this process, as soon as the FOC/Outage coordinators are contacted, so that they can send out an official notification to building tenants and EH&S for ILSM.

5.3 All unplanned outages must have a work order associated with them. Samples of unplanned outages include, but are not limited to:

A. A city-related Utility failure that affects MDACC facility(ies).

B. An unforeseen equipment failure that affects one or more building systems.

ATTACHMENTS/LINKS

Appendix A - Summary of Outage Schedule Procedure Timeline (Attachment # ATT1769).

Utility Outage Process Flow.

RELATED POLICIES

Interim Life Safety Measures Policy (UTMDACC Institutional Policy # ADM0210).

Lockout/Tagout of Energized Equipment Policy (UTMDACC Institutional Policy # ADM0229).

JOINT COMMISSION STANDARDS / NATIONAL PATIENT SAFETY GOALS

EC.02.05.01;
"The hospital manages risks associated with Utility systems." *Comprehensive Accreditation Manual for Hospitals (CAMH),* 2015.

LS.01.02.01;
The hospital protects occupants during periods when the Life Safety Code is not met or during periods of construction." *Comprehensive Accreditation Manual for Hospitals (CAMH),* 2015.

OTHER RELATED ACCREDITATION / REGULATORY STANDARDS

None.

REFERENCES

None.

POLICY APPROVAL

Approved With Revisions Date: 12/01/2015
Approved Without Revisions Date:
Implementation Date: 12/01/2015
Version: 12.0

RESPONSIBLE DEPARTMENT(S)

Environmental Health & Safety

Appendix A

SUMMARY OF OUTAGE SCHEDULING PROCEDURE TIMELINE

REF, PCPF, AFCO, FPDC, IT/Telecomm

This document illustrates a summary of the flow of action and a *typical* timeframe for executing outages in buildings with critical research, patient care, or administrative functions based on the level and scope of the outage.

1. Request Outage → **2. Evaluate Outage** → **3. Coordinate Outage** → **4. Schedule and Execute Outage** → **Complete Post Outage Activities**

Level 1 – Impacts ranging from "No effects to normal operations", to less than one-half of a building floor. Level 2 – Impacts ranging from one-half of a building floor to less than one-half of a building. Level 3 – Impacts ranging from one-half of a building, up to an entire / multiple buildings.		**LEVEL 1**	**LEVEL 2**	**LEVEL 3**
Step 1. REQUEST OUTAGE	**WHO TAKES ACTION**	**BUSINESS DAYS FOR MOST OUTAGES.**		
Complete, submit Utilities Outage Shutdown request.	Requestor	0	0	0
Accept outage, or return outage to requestor.	AFCO Outage Coordinator	1	1	1
Step 2. EVALUATE OUTAGE: Multiple crafts and possibly multiple Departments.				
Complete shop response. The shop response is used by the outage coordinator to determine the scope of outage impact.	Technical Investigator #1	2	3	5
Complete shop response. The shop response is used by the outage coordinator to determine the scope of outage impact.	Technical Investigator # 2	1	2	4
Complete shop response ILSM. The shop response is used by the outage coordinator to determine the scope of outage impact.		1	2	2
Complete shop response by the IT Information Technology. The shop response is used by the outage coordinator to determine the scope of outage impact.		1	2	2
Assign outage level based on the outage impact as determined in the shop response.	AFCO Outage Coordinator	0	0	0
Step 3. COORDINATE OUTAGE				
Determine preliminary outage scheduled date using shop response and negotiate preliminary outage date with key stakeholders.	AFCO Outage Coordinator	3	2	3
Additional time may be required to: 1) obtain a consensus from key stakeholders who do not agree with requested outage date; 2) escalate to the FM property manager / director and/or FM AVP; and 3) receive final approval from FM property manager / director.				
Step 4. SCHEDULE AND EXECUTE OUTAGE				
Notify all impacted personnel of approved outages via email with lead time for preparation of the outage. Conduct walk through of impacted area within 48 hours of outage, if feasible. Execute the outage.	AFCO Outage Coordinator, Requestor, Contractor or FM Onsite Outage Manager	1	3	3
ELAPSED BUSINESS DAYS for STEP 1 - REQUEST OUTAGE TO STEP 4 - SCHEDULE AND EXECUTION UTILITY OUTAGE. Note: *See step # 3 as additional time may be required if key stakeholders require a 7-10 day notice if their area is affected.*		10	15	20
COMPLETE POST OUTAGE ACTIVITIES				
* Monitoring Services is notified about early, extended, cancelled and/or completed outages by FM onsite manager. * Monitoring Services notifies via email all impacted customers and key stakeholders about early, extended, and/or cancelled outages. * Monitoring Services updates shift log with outage complete after FM onsite manager notifies FOC-Monitoring Services.	FM Onsite Outage Manager, Monitoring Services			

ATTACHMENT "C"
(to Owner's Special Conditions)
PROJECT SIGN LAYOUT

NAME OF PROJECT — 2 1/2" Univers LT Std - 75 Black*

ARCHITECT/ENGINEER — 2" Univers LT Std - 65 Bold*
Name of Firm — 2" Univers LT Std - 45 Light*

GENERAL CONTRACTOR — 2" Univers LT Std - 65 Bold*
Name of Contractor — 2" Univers LT Std - 45 Light*

THE UNIVERSITY OF TEXAS SYSTEM — 1 1/4" Univers LT Std - 65 Bold

DEPARTMENT OF FACILITIES PLANNING, DESIGN & CONSTRUCTION — 1 1/4" Univers LT Std - 65 Bold

* Adjust letter size as required for length

Submit a one-quarter scale shop drawing of the sign complete with all lettering to the owner for approval before construction. The sign shall be constructed of 3/4" thick A-C Grade exterior plywood. The sign shall receive two coats of an approved white semi-gloss exterior enamel on all surfaces before lettering. The owner will designate the colors for the lettering on the shop drawing.

SECTION 00 73 16 - PROJECT INSURANCE REQUIREMENTS

PART 1 - GENERAL

1.1. DEFINTIONS

1.1.1. The term "OCIP", as used throughout the Contract Documents, shall refer to the Owner Controlled Insurance Program.

1.1.2. The term "OCIP Administrator", as used throughout the Contract Documents, shall refer to those employees of the firm that acts as Owner's Insurance broker whose duties include, but are not limited to, confirming Contractor and Subcontractor enrollments, tracking monthly payroll reports, ordering final payroll audits, and reporting program costs to Owner.

1.1.3. The term "OCIP Loss Control Representative", as used throughout the Contract documents, shall refer to those employees and representatives of the firm that acts as Owner's Insurance broker who conduct Site safety services, track insurance claims, and issue reports concerning Contractor management of safety and insurance claims.

1.1.4. The term "MWrap", as used throughout the Contract documents, shall refer to the OCIP Administrator's online portal which shall be utilized by Contractor and all enrolled Subcontractors to submit documentation relative to the OCIP.

1.2. PURPOSE

1.2.1. The purpose is to have one (1) major insurance program in place to address those risks associated with Workers' Compensation and Employer's Liability, and General Liability which will exist on Owner's property during construction. Owner expects the majority of employers performing construction work under this Contract to enroll in the OCIP.

1.2.2. Owner shall provide, at its own expense, specific insurance policies and coverage for Contractor and for all enrolled Subcontractors on the Project, as described in Article 2.1 and 2.2 of this Section 00 73 16.

1.2.3. Contractor and all enrolled Subcontractors shall provide all other insurance coverages, including those described in Article 2.3 of this Section 00 73 16 and as necessary or required to address all other risks for the Project.

1.2.4. **Contractor and all enrolled Subcontractors shall disregard those Articles of the Uniform General Conditions for University of Texas Building Construction Contracts (UTUGCs) that are in conflict with this Section 00 73 16 and shall recognize and agree to the requirements described in this Section 00 73 16.**

1.2.5. **The Subcontractors and all other parties to the Contract that are not enrolled shall furnish proof of insurance in accord with the UTUGCs.**

1.3. RELATED DOCUMENTS

1.3.1. In addition to specific references indicated herein, Contractor's attention is directed, but not limited, to the following Sections and documents, which include additional administrative requirements:

1.3.1.1. Current Edition of the Uniform General Conditions for University of Texas Building Construction Contracts (UTUGCs).

1.3.1.2. Owner's Special Conditions, Specification Section 00 25 00.

1.3.1.3. Project Safety (OCIP), Specification Section 01 25 23.

1.3.1.4. Attachment A to this Section 00 73 16 – Project Insurance Manual.

1.3.1.5. Attachment B to this Section 00 73 16 – ROCIP Policy.

PART 2 – PRODUCTS

2.1 INSURANCE COVERAGE FURNISHED BY OWNER (OCIP): The following insurance shall be furnished to Contractor and all enrolled Subcontractors in separately issued coverage. A copy of the Project Insurance Manual is provided as Attachment A.

2.1.1 Workers' Compensation and Employer's Liability

2.1.1.1 Carrier and contact information as provided in the Project Insurance Manual.

2.1.1.2 Policies will be issued on an annual basis until Substantial Completion of the Project.

2.1.1.3 Coverage A - Statutory Benefits: Liability imposed by the Workers' Compensation and/or Occupational Disease statute of the State of Texas and any other State or governmental authority having jurisdiction over or related to the work performed on the Project.

2.1.1.4 Coverage B - Employer's Liability Limits:

2.1.1.4.1 $1,000,000.00 bodily injury per accident/employee;

2.1.1.4.2 $1,000,000.00 bodily injury per disease/employee;

2.1.1.4.3 $1,000,000.00 policy limit by disease.

2.1.1.5 Extensions of Coverage

2.1.1.5.1 Other States Endorsement(s)

2.1.1.5.2 Voluntary Compensation, if exposure exists may be added

2.1.1.5.3 United States Longshoreman's & Harborworker's Act, may be added if needed

2.1.1.5.4 Ninety (90) day Notice of Cancellation from the Insurance Provider, except 10 days for non-payment of premium

2.1.1.5.5 Amendment of Notice of Occurrence

2.1.2 Commercial General Liability (Primary and Excess)

2.1.2.1 Carrier and contact information as provided in the Project Insurance Manual.

2.1.2.2 Certificates of Insurance will be issued naming each Contractor as a named insured upon enrollment.

2.1.2.3 Limits:

2.1.2.3.1 $2,000,000.00 Each Occurrence/all insured

2.1.2.3.2 $2,000,000.00 Personal Injury and Advertising Injury limit

2.1.2.3.3 $5,000,000.00 Completed Operations aggregate/all insured

2.1.2.3.4 $5,000,000.00 General Aggregate/all insured (Annual Aggregate Per Project)

2.1.2.3.5 $10,000.00 Medical Expense Limit

2.1.2.3.6 $250,000.00 Fire Legal Liability

2.1.2.4 Policy Form:

2.1.2.4.1 Insurance Service Office "Occurrence" form – CG 00 01 (12/07)

2.1.2.5 Extensions of Coverage:

2.1.2.5.1 Incidental Medical Malpractice Liability

2.1.2.5.2 Completed Operations Liability coverage for a period of ten (10) years after substantial completion notification by Owner.

2.1.2.5.3 Waiver of Subrogation Endorsement, if required by written contract

2.1.2.5.4 Ninety (90) day Notice of Cancellation from the Insurance Provider, except 10 days for non-payment of premium

2.1.2.5.5 Engineers, Architects or Surveyors Professional Liability Exclusions

2.1.2.5.6 Extended Ongoing Operations coverage for repair work for a period of two (2) years after Substantial Completion.

2.1.2.6 Excess Liability Coverage:

2.1.2.6.1 As following form over Employer's Liability and Commercial General Liability, $100,000,000.00 of excess insurance has been obtained by Owner for the benefit of Owner, Contractor and all enrolled Subcontractors of every tier.

2.1.2.6.2 Carrier and contact information as provided in the Project Insurance Manual

2.1.3 Deductible:

2.1.3.1 Insurance policy deductibles under the OCIP program are paid by Owner

2.1.3.2 Issue of Certificates:

2.1.3.2.1 The OCIP Administrator and/or Insurance Carriers will issue separate Certificates of Insurance for Workers' Compensation, Comprehensive General Liability and Excess Liability to Contractor and each enrolled Subcontractor. Copies of holder policies will be issued following receipt of written request from the OCIP Certificate holders to the OCIP Administrator and copied to the ODR.

2.2 INSURANCE COVERAGE FURNISHED BY OWNER (BUILDER'S RISK) - COVERAGE AND DEDUCTIBLE DESCRIPTION:

2.2.1 Owner intends to provide builder's risk insurance for this project. Refer to the Agreement for the Project for additional information.

2.2.2 Contractor and all Subcontractors shall disregard Article 5.2.2.1.5 through 5.2.2.1.5.10 and 10.5.2 of the UTUGCs and shall recognize and agree to the requirements described in this Section 00 73 16.

2.2.3 Owner will purchase and maintain in force builder's risk insurance on the Work. The insurance will apply on a replacement cost basis with no coinsurance provision.

2.2.4 This insurance will name as insureds Owner, Contractor, and all Subcontractors and sub-subcontractors in the Work but only to the extent of their financial interest in the Work.

2.2.5 Builder's risk insurance will be on an "all risk" or equivalent policy form and will include insurance against fire and extended coverage perils, theft, vandalism, malicious mischief, collapse, earthquake, flood, windstorm, boiler and machinery/mechanical breakdown, testing and startup, and terrorism.

2.2.6 The builder's risk insurance will be specific as to coverage and will be primary to any permanent insurance or self-insurance that may be maintained on the property by Owner.

2.2.7 The builder's risk insurance will include a waiver of subrogation in favor of Owner, Contractor, and all Subcontractors and sub-subcontractors in the work.

2.2.8 Upon request, Owner will provide to Contractor a certificate of insurance that provides evidence of builder's risk insurance.

2.2.9 In the event of an insured loss caused by the action or inaction of Contractor, any Subcontractor or sub-subcontractor, or by anyone directly or indirectly employed by any of them, or by anyone for whose acts any of them may be liable, Contractor will be responsible for, and reimburse to Owner, any applicable deductible under the builder's risk insurance policy, which may be up to $50,000. Any costs associated with Contractor's responsibility for the applicable deductible will not be considered Cost of Work.

2.2.10 Any loss insured under Owner's builder's risk insurance will be adjusted by Owner as fiduciary and made payable to Owner as fiduciary for the insureds, as their interests may appear. Contractor shall track and submit all claim expenses on a time and materials basis unless previously agreed to in writing by Owner. Any mark-up expenses included as part of the claim expenses will be subject to the percentage maximums specified in the initial agreement. Contractor shall pay Subcontractors their just shares of insurance proceeds received by Contractor, and by appropriate agreements, written where legally required for validity, shall require Subcontractors to make payments to their sub-subcontractors in a similar manner. Contractor will be required to provide a Release of Lien to Owner for any insurance proceeds received by Contractor.

2.2.11 Owner's builder's risk insurance will not cover Contractor's, Subcontractors' and sub-subcontractors' construction machinery, equipment and tools used in the performance of the Work. It will be Contractor's, Subcontractors' and sub-subcontractors' responsibility to insure their construction machinery, equipment and tools. Contractors, Subcontractors and sub-subcontractors shall waive all rights of subrogation and recovery against and in favor of Owner for any loss, claim or expense, including, but not limited to, partial or total damage or theft.

2.2.12 Contractor shall assist Owner in obtaining and maintaining builder's risk insurance by providing, in a timely manner, project-related information required by an insurance carrier when requested by Owner or Owner's insurance broker.

2.2.13 Contractor, in coordination with Owner's project manager, must report every claim within twenty-four (24) hours, or no later than the close of business on the next business day, after discovery of a loss or potential loss in accordance with the Builder's Risk Claims Guide, which will be provided once coverage for the Project is bound. Failure to immediately report a loss or potential loss may result in the issuance of a reservation of rights letter by insurers which could prejudice any potential insurance related recovery. Contractor may be liable for any damages that are not covered by insurance due to late notice of a loss or potential loss.

2.3 INSURANCE POLICIES AND AMOUNTS OF COVERAGE FURNISHED BY CONTRACTOR AND ENROLLED SUBCONTRACTORS: All Project insurance not identified in Article 2.1 and 2.2 above shall be provided by Contractor and all enrolled Subcontractors to meet or exceed terms and amounts of coverage as per requirements of the UTUGCs. Liability coverages shall include the following (as applicable to the Work):

2.3.1 Business Automobile Liability Owned/Leased

2.3.2 Equipment (covering total value of owned/rented equipment)

2.3.3 Workers' Compensation/Employers' Liability (**for work not covered by OCIP.**)

2.3.4 General Liability (**Off Site Only**)

2.3.5 Professional Liability Insurance (Errors and Omissions)

2.3.5.1 In the event any Contract specifications require a contractor to provide professional services, such as, but not limited to, architectural, engineering, construction management, surveying, design, etc., a Certificate of Insurance must be provided prior to commencing work evidencing such coverage with a limit of not less than $1,000,000.00. Any material change in limits, coverage or loss of aggregate limit due to outstanding claims must be reported to Owner within thirty (30) days of any such event.

2.3.6 Aviation Insurance - $10,000,000.00 (as applicable)

2.3.6.1 In the event any fixed-wing or rotary aircraft are used in connection with the Project and/or in the execution of the Work, a minimum of $10,000,000 of Aviation Liability Insurance must be maintained with the following requirements: Owner must be named as an "additional insured" and a waiver of hull damage must be provided in favor of Owner.

2.3.6.2 If any aircraft is to be used to perform lifts at the Site, a "slung cargo" endorsement must be included to cover the full replacement value of any equipment or material being lifted. All such lifts must be coordinated with Owner for approval prior to lift execution.

2.3.7 Environmental and Asbestos Abatement Insurance - $5,000,000.00 per claim (as applicable)

2.3.7.1 If this Agreement involves environmentally sensitive operations (such as the removal of asbestos, the removal/replacement of underground tanks or operations involving toxic chemicals, heavy metals and/or carcinogenic substances), Contractor and/or involved Subcontractors shall submit proof of full coverage for such exposures subject requirements and obtain approval of Owner prior to commencement of such operations. Subcontractors that are directly and actively involved in the performance of work associated with environmentally sensitive operations will be excluded from the OCIP. If Environmental Coverage is written on a Claims Made basis, five years Completed Operations shall be included.

2.3.8 Maritime Insurance - Hull, Protection and Indemnity (including crew) - $10,000,000.00 (as applicable)

2.3.8.1 In the event any watercraft is used in connection with the Project, Contractor and/or involved Subcontractor shall submit proof of a "Hull and Protection and Indemnity Policy". The amount of insurance on the Hull shall be sufficient to cover the watercraft, its equipment and all additional equipment aboard during the time it is in use on the Project. Protection and Indemnity shall have limits of liability of no less than $10,000,000.00 including coverage of the construction activity for which the watercraft is used. Master and Crew coverage shall include General Maritime Liability, Jones Act and Wages, Transportation, Maintenance and Care.

2.3.9 Waiver of Subrogation

2.3.9.1 To meet the requirements of Article 2.3, all policies shall contain a Waiver of Subrogation in favor of the Board of Regents of The University of Texas System, their respective agents, consultants, servants and employees of each and all other indemnities.

2.3.10 Names of Additional Insured

2.3.10.1 To meet the requirements of Article 2.3, for each of the preceding coverages, excepting Workers Compensation, all policies shall endorse the Board of Regents of The University of Texas System, its respective agents, consultants, servants and employees of each and all other indemnities as "Additional Insured".

2.3.11 Waiver of Property Damage and Right of Recovery

2.3.11.1 To meet the requirements of the UTUGCs, all policies shall contain written agreement to waive Contractor's and each enrolled Subcontractor's right for recovery of physical damage or loss to their respective properties against each

other for damages, losses or claims arising out of or in connection with this Project and this Agreement. This written waiver shall also extend to the benefit of the Board of Regents of The University of Texas System, its respective agents, consultants, servants and employees. This waiver of the right of recovery for property damage shall be binding upon any property (real or personal), builder's risk, automobile, aircraft, watercraft, tools or equipment insurer as respects any subrogation rights that such insurer may possess by virtue of any payments of damage or loss.

2.4 CONTRACTOR ASSURANCE OF SAVINGS

2.4.1 Contractor and all enrolled Subcontractors shall agree, warrant, and represent that any proposal(s) for construction services exclude all costs associated with Owner furnished insurance coverage as specified in Article 2.1 and 2.2 of this Section 00 73 16.

2.4.2 Contractor and all enrolled Subcontractors shall agree to be subject to audits for payroll, work hours and insurance costs by the respective insurance companies providing coverage under the OCIP. The purpose of such audits is to validate insurance premiums and compare wages and other OCIP costs. Contractor and all Subcontractors shall agree to furnish payroll and other information in the forms and formats as requested by the OCIP Administrator in the Project Insurance Manual and as required via MWrap. Further, Contractor and all Subcontractors agree to cooperate fully with any and all audits by supplying the required information in the manner required and as expeditiously as possible. If proprietary information is involved, Contractor and all enrolled Subcontractors will be allowed to guard the material while it is being reviewed by Owner or any of its agents.

2.4.3 Contractor and enrolled Subcontractors agree, warrant, and represent that costs for all Change Orders as described in the UTUGCs, shall exclude any cost for the insurance provided by Owner.

2.5 EXCLUSION FROM OCIP ENROLLMENT: Prior to commencement of any Work at the Site and until completion and acceptance of Work, Subcontractors that are allowed by Owner to be excluded from enrollment in the OCIP shall maintain, at their sole expense, insurance coverage as per the UTUGCs and Article 2.3 of this Section 00 73 16.

2.5.1 Automatic Exclusion

2.5.1.1 Temporary workforce agencies (unless approved per Article 3.1.5), consultants, vendors, suppliers, material dealers, and delivery service companies shall not be considered as a Contractor or Subcontractor and therefore automatically shall be excluded from enrollment in the OCIP. Contractor shall confirm that the companies in these categories produce copies of proof of proper insurance for the risk exposures that each one will create or experience while on the Site.

2.5.1.2 Subcontractors performing environmentally sensitive or highly hazardous work will be required to furnish proof of special coverage in adequate amounts for

Aviation Insurance, Environmental and Asbestos Abatement Insurance, Maritime Insurance and any other policies of such nature.

2.5.1.2.1 Before performing any work, the Subcontractor shall provide to Contractor and the OCIP Administrator, a Certificate of Insurance that matches the requirements described in the UTUGCs and Article 2.3 of this Section 00 73 16.

2.5.1.3 Excluded Subcontractor(s) shall adhere to all project safety requirements and take all necessary precautions to protect all other persons in the vicinity from the risk exposures that the excluded Subcontractor may create while performing work on the Project.

2.5.2 Discretionary Exclusion

2.5.2.1 Contractor may issue a written request on behalf of a Subcontractor or sub-subcontractor of any tier for a discretionary exclusion from enrollment in the OCIP. To be considered, the Subcontractor or sub-subcontractor must be bound to a scope of Work that anticipates a total labor value of less than $5,000.00. A Certificate of Insurance with coverage amounts and language as required by the UTUGCs and Article 2.3 of this Section 00 73 16 shall be furnished to the OCIP Administrator. The OCIP Administrator, in concurrence with the ODR, will review issues such as prior enrollment, scope of work and associated risk. Based on this evaluation, exclusion may or may not be granted.

2.5.3 Excluded Subcontractors

2.5.3.1 Excluded Subcontractors shall submit Certificates of Insurance for Owner acceptance for adequacy of protection and <u>for the satisfactory character of the Insurer</u> prior to performing any work on the Project. Each certificate must have a thirty (30) day prior written notice of cancellation showing the Board of Regents of The University of Texas System as the Certificate Holder.

2.5.3.2 In the event of failure of the excluded Subcontractor to furnish and maintain said insurance and to furnish satisfactory evidence thereof, Owner and/or Contractor shall have the right to take out and maintain coverage for all parties on behalf of the excluded Subcontractor who agrees to furnish all necessary information to bind such coverage and to allow deduction for the cost thereof immediately upon presentation of an invoice.

2.6 GOVERNING CONDITIONS

2.6.1 Owner's payment of premiums for the insurance described in this Section 00 73 16 shall in no way be interpreted as relieving Contractor and/or any enrolled Subcontractor of any responsibility of liability under this Agreement.

2.6.2 The amount and types of insurance coverage required herein shall not be construed to be a limitation of liability on the part of Contractor or any of its Subcontractors.

2.7 ELECTIVE INSURANCE FURNISHED BY A CONTRACTOR

2.7.1 Contractor, any enrolled Subcontractor and any enrolled sub-subcontractor of any tier may elect to maintain a supplementary insurance policy(ies) to extend the coverage terms and/ or conditions that are described in this Section. The cost of any policy(ies) shall be at the sole expense of Contractor, Subcontractor or sub-subcontractor and shall not be reimbursed by Owner.

PART 3 – EXECUTION

3.1 OCIP ENROLLMENT PROCESS

3.1.1 Contractor shall provide all prospective subcontractors with the information in this Section 00 73 16, not later than the 10th day before Contractor enters into a contract with the prospective subcontractor. Contractor shall provide written acknowledgement from each Subcontractor to the OCIP Administrator of enrollment and issuance of OCIP "Certificate of Insurance".

3.1.2 Contractor and all enrolled Subcontractors shall submit all insurance, underwriting, payroll, rating or loss history information as required by Owner to the OCIP Administrator for enrollment and issuance of OCIP "Certificates of Insurance" via MWrap. The OCIP Administrator shall provide MWrap Contractor Portal Instructions which shall guide Contractor and its Subcontractors in accessing and using MWrap. Online forms, and other requested documentation, shall be completed within ten (10) working days of contract award unless work under the contract is commencing within this ten day period which shall cause the Subcontractor to expedite his enrollment via MWrap. No contractor shall perform any work on the Project until it is recognized as having been enrolled in or excluded from the OCIP by the OCIP Administrator.

3.1.3 Contractor and enrolling Subcontractors shall provide all information necessary to bind coverage under the OCIP. The OCIP Administrator will notify Contractor and respective Subcontractor when an application has been approved and coverage afforded.

3.1.4 OCIP enrollment will not be complete and work shall not commence until the OCIP Administrator has issued the OCIP "Certificates of Insurance" to the applicant.

3.1.5 Contractor, Subcontractor(s) and sub-subcontractors of any tier that perform operations on the Site and such other persons or entities as Owner may designate as enrolled parties, who perform direct labor at the Site or sites incidental to the Work are considered enrolled parties. **Temporary labor services and leasing companies are to be included as Subcontractor(s) only at the approval of Owner.** Contractor, Subcontractor(s), and sub-subcontractors of any tier must have submitted all necessary

enrollment forms and have been accepted into the OCIP as evidenced by a confirmation of enrollment letter and issuance of OCIP "Certificates of Insurance".

3.1.6 Participation in the OCIP is mandatory for Contractor and all Subcontractors and sub-subcontractors of any tier unless excluded by Owner or as outlined in Article 2.5 of this Section 00 73 16. **However, enrollment is not automatic.** Work will not be permitted at the Site until Contractor, Subcontractor and a sub-subcontractor of any tier, is properly enrolled in the OCIP.

3.1.7 **OCIP Coverage applies only to work performed at the Site by the enrolled parties.** Enrolled parties must provide their own insurance for off-site activities including, but not limited to, work at their permanent shops, fabrication or manufacturing of building products, materials or supplies.

3.2 PROJECT ADMINISTRATION AND FORMS

3.2.1 Contractor shall be responsible to manage and ensure the transmission of all administrative and safety documentation, including Subcontractor insurance and payroll information, as required and directed by Owner.

3.2.2 Contractor and all enrolled Subcontractors and sub-subcontractors shall include those administrative costs in the Contract Sum (CCL) or Guaranteed Maximum Price (GMP) that are necessary to properly comply with the Contract Documents.

3.3 OCIP DOCUMENTATION COMPLIANCE

3.3.1 Failure by Contractor and/or any Subcontractor and/or any sub-subcontractor to submit documentation and forms as directed by Owner, or the OCIP Administrator, as described in Article 3.1 and 3.2 of this Section 00 73 16 and in the Project Insurance Manual may result in an Owner-issued deductive Change Order to Contractor for each delinquent document. Contractor will be held accountable for all costs and schedule impacts associated with this action.

3.3.2 Persistent failures by Contractor and/or any enrolled Subcontractors and/or sub-subcontractors may result in a "stop work" order by Owner. Contractor will be held accountable for all costs and schedule impacts associated with this action.

3.3.3 **Payroll Reporting—**for insurance and program purposes, Contractor shall keep and maintain an accurate record of payroll for operations at the Site. Contractor shall ensure all enrolled subcontractors and sub-subcontractors furnish full and accurate payroll information and data via MWrap and in accordance with the requirements of the OCIP program, as detailed in the Project Insurance Manual.

3.3.3.1 Payroll must be submitted by Contractor and all tiers of enrolled Subcontractors via MWrap at each of the following occurrences:

- Monthly on or by the 10th of each month, following the end of the previous month.

- Final: Due upon completion of sublet work or at Project Substantial Completion, whichever occurs first.

3.3.3.2 The payroll will identify the Site work-hours and payroll. Only the payroll for Contractor's and all enrolled Subcontractors' and sub-subcontractor's employees who perform duties at the Site should be included on the payroll report.

3.3.3.3 Enrolled Subcontractors and sub-subcontractors that did not perform any work at the Site in a given month must **still** submit a payroll form via MWrap showing zero (0) payroll and applicable completed contract value to date (if applicable) for the month**.**

3.3.3.4 **Contractor and enrolled Subcontractors and sub-subcontractors with payroll reporting delinquent beyond 30 days will receive a Payroll Reminder Letter requesting response of activity in accordance with each contract under coverage.**

3.3.3.5 The OCIP insurer is required to file experience data for each enrolled party with the appropriate rating authority. The loss experience of Contractor and enrolled Subcontractors and sub-subcontractors for Work performed on the Site may affect the experience modification factor of that Contractor or enrolled Subcontractor or sub-subcontractor.

3.3.3.6 Contractor and enrolled Subcontractors and sub-subcontractors should exclude payrolls reported for work performed under the OCIP from payrolls submitted to their primary insurer to avoid duplicate premium charges. The insurance policies written by your primary insurance provider may need to be endorsed or modified to assist in this process.

3.3.4 Incident Notification and Claims Management:

3.3.4.1 Workers Compensation claims are to be initiated immediately by the employer, and shall always be within twenty-four (24) hours or one (1) work day of the occurrence, **or immediately upon acknowledgement of an injury from an employee,** whichever is later. The mechanism for initiating such a claim shall be the completion and transmittal of a "First Report of Injury" form (DWC Form 1) to the OCIP insurance carrier. Late reporting has been proven to substantially escalate the cost of claims and may therefore result in action on the part of Owner to recover these avoidable costs from Contractor by applying the following charges:

3.3.4.1.1 $1,500.00 for reports that are 2 – 3 workdays beyond the date of occurrence

3.3.4.1.2 $5,000.00 for reports that are 4 – 30 workdays beyond the date of occurrence

3.3.4.1.3 $7,500.00 for reports that are 31 – 60 workdays beyond the date of occurrence

3.3.4.1.4 $10,000.00 for reports that are more than 60 days beyond the date of occurrence

3.3.4.2 General Liability claims are to be initiated immediately and shall be within twenty-four (24) hours or one (1) workday of the occurrence, whichever is later. The mechanism for initiating such a claim shall be the completion and transmittal of a Notice of Occurrence / Claim form to the designated OCIP administrative representative or as directed by Owner. Late reporting has been proven to substantially escalate the cost of claims and may therefore result in action on the part of Owner to recover these avoidable costs from Contractor by applying the following charges:

3.3.4.2.1 $1,500.00 for reports that are 2 – 3 workdays beyond the date of occurrence

3.3.4.2.2 $5,000.00 for reports that are more than 3 workdays beyond the date of occurrence

3.3.4.3 General Liability – Property Damage:

3.3.4.3.1 If Owner determines that Contractor failed to take proper precautions prior to an incident that results in a property damage claim against the General Liability coverage, Owner may recover from Contractor the first $5,000.00 of incurred cost against the claim.

3.4 WORKERS COMPENSATION PROCEEDINGS

3.4.1 Owner may require Contractor and/or the enrolled employer of an injured worker to provide knowledgeable representation at legally binding proceedings scheduled by the Texas Department of Insurance. The proceedings that affect the amount of compensation are “Benefit Review Conferences” and “Contested Case Hearings”. Failure to provide such representation may result in Owner issuance of a recovery charge to Contractor of $5,000.00 per proceeding.

3.5 EMPLOYEE RETURN TO WORK PLAN

3.5.1 Contractor and every Subcontractor shall develop an Employee Return to Work (“Light Duty”) Plan that allows and encourages medically restricted workers to resume employment as soon as a physician assigns limits. The Plan shall include the following elements:

3.5.1.1 A written policy with signed acknowledgement from a company executive that declares intent to provide proactive safety prevention measures, immediate and appropriate medical care, aggressive claims management, and rapid return to work as critical elements of a successful safety and loss control program.

3.5.1.2 Job descriptions that clearly identify and explain essential job functions and tasks required for each position. Minimum physical limits, motor skills, and endurance times shall be included.

3.5.1.3 Procedures and responsibilities shall help physicians understand the Plan, the employee's typical work assignments and activities, and available alternate assignments.

3.5.1.4 A commitment to the continuous employee education about the Plan, shall include monitoring of assignments, record keeping, and communications with physician(s) and injured worker(s), and tracking of compensation reports.

3.5.1.5 Full compliance with the Americans with Disabilities Act, Family Medical Leave Act, the Texas Worker's Compensation Act, and any other State or federal law.

3.5.2 Employment for Workers with Medical Restrictions ("Return to Work" or "Light Duty" policy):

3.5.2.1 Either the absence of a written policy or the presence of a written policy that lacks a responsible commitment to restoring medically restricted workers to gainful employment (considered to be at a similar work schedule and wage that was in effect at the time of the injury) may result in an assessment of a recovery charge by Owner to Contractor of $5,000.00 per finding.

3.5.2.2 If Owner determines that Contractor or any enrolled Subcontractor deliberately obstructs a reasonable request that is intended to restore an injured worker to gainful employment, Owner will assess a recovery charge against Contractor of $5,000.00 per claim per month until the worker is returned to employment. If Contractor or enrolled Subcontractor believes that the medical restrictions prohibit gainful employment, Contractor will be required to prove this to Owner's satisfaction.

3.5.2.3 Failure to pass or refusal to take any substance impairment screening will result in Owner requirement that the involved worker be removed from the Project and not be allowed to work on any Owner project.

3.5.2.4 The cost of all post-accident screening is the responsibility of the injured worker's employer.

3.6 EXPIRATION AND AVAILABILITY OF OCIP COVERAGE

3.6.1 Termination of OCIP Coverage

3.6.1.1 Except for Extended Completed Operations coverage or Extended Ongoing Operations coverage for Repair Work, the General Liability and Excess Liability insurance furnished by Owner under this Agreement will cease for Contractor and each enrolled Subcontractor at the earlier of OCIP program expiration or when work called for in the Contract Documents has been completed and accepted by Owner. Workers Compensation coverage will continue until the earlier of OCIP program expiration or when work called for in the Contract documents has been accepted as identified in the Certificate of Substantial Completion issued by Owner.

3.6.2 Availability and Cancellation

3.6.2.1 Subject to market availability, all insurance specified herein shall be maintained continuously until the scheduled completion/termination date. All insurance shall provide for Owner to take occupancy of the Work or any part thereof during the term of said insurance. If coverage is diminished or cannot be renewed due to market constraints and limitations, all insured Contractors will be notified within the ninety (90) day cancellation or non-renewal period as provided in the policies. Upon termination of Owner-provided insurance, Contractor and all enrolled Subcontractors shall be responsible for furnishing all insurance as described in the UTUGCs and Article 2.3 of this Section 00 73 16.

3.6.2.2 Owner-furnished insurance may also be discontinued in the event the Project is substantially delayed for an extended period of time, or the Project is permanently terminated for any cause.

END OF SECTION 00 73 16

ATTACHMENTS FOLLOW:

Attachment A – Project Insurance Manual
Attachment B – ROCIP Policy

ATTACHMENT A

PROJECT INSURANCE MANUAL

PROJECT INSURANCE MANUAL

THE UNIVERSITY OF TEXAS SYSTEM
PHASE VII

ROLLING OWNER CONTROLLED INSURANCE PROGRAM (ROCIP)

August, 2017

CONTENTS

1. Introduction 1
   - Enrolled Parties 2
   - Excluded Parties 2
   - Exempted Parties 2

2. Project (Name & Number) Contact Directory 3
   - ROCIP Administration 3
   - The University of Texas System 4
   - Project Safety Coordinator 4
   - Insurers 4

3. Description of ROCIP Coverages 5
   - Workers' Compensation and Employers' Liability 6
   - Commercial General Liability 7
   - Umbrella/Excess Liability 8
   - If The University of Texas System Elects Not to Continue the ROCIP 10

4. Contractor Responsibilities 11
   - Contractor Bids—ROCIP Provisions 11
   - Contractor Bids—Net Bids 11
   - Enrollment 13
   - Evidence of Insurance 14
   - Subcontract Award Notification 14
   - Cooperation 14
   - Payroll Reporting, Maintenance, and Audits 15
   - Notification of Change Orders 16
   - Notice of Work Completion—Close-out of Each Contract 16
   - Claims Reporting 17
   - Safety Procedures 17

5. Contractor-Provided Insurance Requirements 18
   - Required Endorsements 18
   - Insurance Requirements of Excluded Parties 20

6. ROCIP Enrollment Procedures and Forms 21

- Enrollment Process—Checklist of Required Submittals 21
- Sample Off-Site Certificate of Insurance 23

7. Claim Reporting/Posting Procedures 24
   - Workers' Compensation Posting Requirements 24
   - Workers' Compensation Claim Reporting 25
   - General Liability Claim Reporting 33
   - Professional Liability Claim Reporting 34
   - Automobile Claim Reporting 34
   - Other Claim Related Services 34

8. Questions Commonly Asked About A ROCIP 36

9. Meanings of Words and Phrases 39

1

Introduction

Welcome to this Rolling Owner Controlled Insurance Program

The University of Texas System has arranged insurance for this construction project under a Rolling Owner Controlled Insurance Program (ROCIP). A ROCIP is a single insurance program that insures the project, The University of Texas System, enrolled General Contractors and enrolled Subcontractors of any tier, along with their eligible employees and other designated parties for work performed at the project site. Please note, certain parties and their employees are excluded from the ROCIP as identified in this Manual.

This Manual is intended to provide general information as to the insurance afforded and/or required of enrolled parties, claims reporting, safety & loss control requirements, and the procedures to be followed in administering the program. All questions concerning the ROCIP requirements outlined in this Manual should be referred to the ROCIP administrator as indicated in Section 2, the Project Contact Directory.

The ROCIP for this project provides the following coverage for enrolled parties whose employees perform actual on-site labor at the Project Site:

- Workers' Compensation
- Employers Liability
- General Liability
- Completed Operations
- Excess Liability

The University of Texas System will pay insurance premiums for the ROCIP coverages outlined above. It is recommended that you place your current insurer on notice that you are participating in a ROCIP.

This manual:
- describes the general structure of the ROCIP;
- identifies the responsibilities of the various parties involved in the project;
- provides a basic description of ROCIP coverage;
- describes audit and administrative procedures;
- provides a Glossary or Commonly Used Words;
- provides Answers to Commonly Asked Questions; and
- will be updated as necessary.

This manual does not:
- provide coverage interpretations;
- provide complete information about coverage; or
- provide answers to specific claim questions.

Enrolled Parties

General Contractor(s) and Subcontractor(s) of any tier who perform operations on the Project Site and such other persons or entities as The University of Texas System may designate as enrolled parties, who perform direct labor at the Project Site or sites incidental to the Work. **Temporary labor services and leasing companies are to be included as Subcontractor(s) only at the approval of The University of Texas System.** Contractor(s) and Subcontractor(s) of any tier must have submitted all necessary enrollment requirements via the MWrap web portal and have been accepted into the ROCIP as evidenced by a confirmation of enrollment letter and Certificate of Insurance.

Participation in the ROCIP is mandatory for ALL Contractors and their Subcontractors of any tier unless excluded by The University of Texas System or as outlined later in this manual. **However, enrollment is not automatic**. Work will not be permitted at the Project Site until the Contractor and Subcontractor, regardless of tier, is **properly enrolled** in the ROCIP. A properly enrolled Contractor is one who has properly completed and submitted the necessary forms via the MWrap web portal and other documents as described in this Project Insurance Manual.

ROCIP Coverage applies only to work performed <u>at the Project Site</u> by the enrolled parties. Enrolled parties must provide their own insurance for off-site activities including, but not limited to, work at their permanent shops, fabrication or manufacturing of building products, materials or supplies.

The provisions herein for the ROCIP shall in no way be interpreted as relieving the enrolled parties of any responsibility under their contract with this program. All enrolled parties will be required to carry certain other insurance as outlined in contract documents (Article 5 Bonds and Insurance of the UGC, and 00 73 16 Project Insurance Requirements) and may carry, at their own expense, any additional insurance they deem necessary.

Excluded Parties

Off-site fabricators, vendors, suppliers, material dealers, janitorial services (not involved in construction site activities), delivery cranes, demolition, blasting, truckers (including trucking to the Project Site where delivery is the only scope of Work to be performed), asbestos abatement or other hazardous waste removal Contractor(s) and their respective Subcontractor(s) of any tier, and others whose sole function is to transport, pickup, deliver or carry materials, supplies, tools equipment, parts or other items to or from the Project Site, or who do not perform any actual on-site labor, and any other entity specifically determined by The University of Texas System to be excluded. Excluded parties will not be covered by insurance provided through the ROCIP.

Exempted Parties

It is the UT System's intent to enroll all Contractors and Subcontractors of any tier who perform on-site labor. The UT System, at its sole discretion, may grant exemptions to enrollment based on an individual contractor's work duration and scope of work. Exemption requests should include a completed notice of award (via MWrap), and written request sent to the ROCIP administrator (via e-mail) detailing scope of work to be performed onsite. Additionally, each request should include a certificate of insurance with a copy of all endorsements as required by contract.

2

PROJECT CONTACT DIRECTORY

ROCIP Administration	
Marsh USA Inc.	1717 Main Street; Suite 4400 Dallas, Texas 75201 214 303 8400 (main phone line)
• Client Executive	John Egan Phone #: 214 303 8125 Email: john.j.egan@marsh.com
• ROCIP Program Manager	Marcus Robins Phone #: 214 303 8445 Fax #: 888 501 9769 Email: marcus.robins@marsh.com Susan Baggett Phone #: 214 303 8209 Fax #: 888 501 9769 Email: susan.baggett@marsh.com
• ROCIP Administrator	Program Communication Fax #: 888 501 9769 Email: UT.ROCIPFaxes@marsh.com Luella Norman Phone #: 214 303 8208 Fax #: 888 501 9769 Email: UT.ROCIPFaxes@marsh.com Antoinette Bias Phone #: 713 276 8524 Fax #: 888 501 9769 Email: UT.ROCIPFaxes@marsh.com
• Claims Advisor	Kevin McClelland Phone #: 214 303 8330 Fax #: 214 303 8014 Email: kevin.mcclelland@marsh.com
• ROCIP Safety Manager	Tod Hollis Phone #: 214 303 8632 Email: tod.hollis@marsh.com

The University of Texas System

• Claims Coordinator	John Santos Via Phone #: 512 579 5029 Email: jsantos@utsystem.edu
• Risk Manager	Lisa Gunkel Via Phone #: 512 499 4534 Email: lgunkel@utsystem.edu
• OFPC Safety Analyst	Mark Schaeffer Via Phone #: 409 781 0069 Email: mschaeffer@utsystem.edu

Project Safety Coordinator

General Contractor –	Name: Via Phone #: Email:

Insurers

	Toll free claims reporting is: **1 877 928 4531—Non Ike Projects** Fax reporting is: 866 691 7068
Workers' Compensation Carrier	Zurich North American P.O. Box 619507 Dallas, Texas 75261
Lost Time	Desiree Martin Phone #: 214 866 1120 Email: desiree.martin@zurichna.com
Medical Only	Kathy Wallace Phone #: 214 866 1221 Email: kathy.wallace@zurichna.com
General Liability Carrier	Zurich North American P.O. Box 619507 Dallas, Texas 75261

3

Description of ROCIP Coverages

Participation in this ROCIP is mandatory but not automatic. The ROCIP will provide the enrolled party with insurance described in this section. This insurance will terminate on the date the work has been accepted by the University of Texas System as complete, or other period as described in the ROCIP policy, except for the extended completed operations coverage.

The following coverages are provided by the ROCIP:

- Workers' Compensation
- Employers' Liability
- General Liability
- Completed Operations
- Excess Liability

This Description of ROCIP Coverage has been prepared for the convenience of the enrolled parties and is not an exact and binding analysis of the coverages. This Description of ROCIP Coverage is for your use as a **reference only** and is not intended to be inclusive of all policy terms, conditions and exclusions. Even though care has been taken in the preparation of this Description of ROCIP Coverage, in the event there is a discrepancy, the original policies will prevail as the sole binding documents.

The following coverage summaries are provided for information purposes only. Certificates will be provided to all properly enrolled contractors of all tiers at date of enrollment. Policies will be forwarded **upon written request** of the Contractor or Subcontractors.

Workers' Compensation and Employers' Liability

NAMED INSURED:	BOARD OF REGENTS OF THE UNIVERSITY OF TEXAS SYSTEM and any affiliated or subsidiary entity existing of hereafter constituted as well as all **Contractors and Subcontractors** of every tier enrolled in the Rolling Owner Controlled Insurance Program at the specific location designated in Section II.
POLICY TERM:	08/01/2017 – 08/01/2023 Policies will be issued on an annual basis until project substantial completion.
COVERAGE:	**Coverage A**: Pays statutory benefits to the injured employee according to the Workers' Compensations Law of the State of Texas. Benefits include all reasonable medical expenses, rehabilitation expenses, and a percentage amount of lost wages. Coverage responds to injury, death and certain illness directly related to employment. **Coverage B**: Employers' Liability indemnifies the employer for legal actions taken by an employee against the employer for certain injuries or illnesses not covered by the statue or for alleged gross negligence in providing a reasonably safe work environment.
INSURER:	Zurich American Insurance Company (ZAIC)
MASTER POLICY #:	WC 0183286 - 00 Each Contractor will receive individual Workers' Compensation policy numbers for the duration of their work.
LIMITS:	Workers' Compensation: Statutory as per the State of Texas

Employers' Liability:	$1,000,000	Each Accident
	$1,000,000	Disease Each Employee
	$1,000,000	Disease Policy Limit

Endorsements, Exclusions & Conditions:

- Named Insured Schedule
- Designated Workplace Exclusion Endorsement
- Waiver of Rights of Recovery from Others
- 90 Day Notice of Cancellation
- 10 Day Notice of Cancellation (non-payment)
- Knowledge of Injury Endorsement
- Sole Agent Endorsement
- Notice of Occurrence
- Unintentional Errors & Omissions Endorsement
- Alternate Employer Endorsement

Commercial General Liability

NAMED INSURED:	BOARD OF REGENTS OF THE UNIVERSITY OF TEXAS SYSTEM and any affiliated or subsidiary entity existing of hereafter constituted as well as all **Contractors and Subcontractors** of every tier enrolled in the Rolling Owner Controlled Insurance Program at the specific location designated in Section II.
POLICY TERM:	08/01/2017 – 08/01/2023 Certificates of Insurance are to be issued naming each Contractor and Subcontractor as a named insured upon enrollment. Copies of policies are available upon written request issued to the Program Administrator.
COVERAGE:	Commercial General Liability (excluding Automobile and Professional Liability) in form providing coverage not less than a Commercial General Liability insurance policy, including hazards of explosion, collapse, underground, independent General Contractor(s), employees as additional insureds, and Completed Operations Liability coverage for a period of ten (10) years after substantial completion notification by The University of Texas System, with Extended Ongoing Operations Coverage for Repair Work for a period of two (2) years after Substantial Completion. Coverage will apply only to work performed at the Project Site. Such insurance will not include coverage for products liability for any product(s) manufactured, assembled, or otherwise worked upon away from the Project site for any enrolled party or excluded party performing such off-site work.
INSURER:	Zurich American Insurance Company
MASTER POLICY #:	GLO 0183287 - 00

LIMITS:

$5,000,000	General Aggregate Limit (other than Products/ Completed Operations)*
$5,000,000	Completed Operations Aggregate Limit
$2,000,000	Personal and Advertising Injury Limit
$2,000,000	Each Occurrence Limit
$250,000	Fire Damage Limit – Each Occurrence
$10,000	Medical Expense Limit – Each Person

*Per Project and subject to Annual Reinstatement of Limits

Endorsements, Exclusions & Conditions:

- Named Insured Schedule
- Additional Insured Endorsement
- In Witness Clause
- Commercial General Liability Coverage Form
- Disclosure of Important Information relating to Terrorism
- Limited Contractual Liability
- Joint Defense Endorsement
- Sole Agent for Insureds

- 90 day Notice of Cancellation
- Extended Completed Operations Designated Projects
- Designated Construction Projects General Aggregate
- Extended Ongoing Operations Coverage – Repair Work
- Unintentional Failure to Disclose
- Notice of Error in Claim Reporting
- Notice of Occurrence
- Fellow Employee Coverage – Designated Employee/Position
- Waiver of Transfer of Rights – as required by written contract
- Collection of Distribution of Material or Information in Violation of Law Exclusion
- Nuclear Energy Liability Exclusion
- Damage to the Project Exclusion
- Contractors Professional Liability Exclusion
- Lead Exclusion
- Fungi or Bacteria Exclusion
- Asbestos Exclusion Endorsement
- Silica Exclusion
- Total Pollution Exclusion with Building Heating Equip. and Hostile Fire Exception

Umbrella/Excess Liability

NAMED INSURED:	BOARD OF REGENTS OF THE UNIVERSITY OF TEXAS SYSTEM and any affiliated or subsidiary entity existing of hereafter constituted as well as all **Contractors and Subcontractors** of every tier enrolled in the Rolling Owner Controlled Insurance Program at the specific location designated in Section II.
POLICY TERM:	08/01/2017 – 08/01/2023 Certificates of Insurance are to be issued naming each Contractor and Subcontractor as a named insured upon enrollment. Copies of policies are available upon written request issued to the Program Administrator.
COVERAGE:	The policy provides increased limits of coverage excess of scheduled underlying policies, including General Liability, and Employers Liability. The policy pays on behalf of the insured for third-party claims for Personal Injury, Bodily Injury, Property Damage, Advertising and Product Losses.
INSURER:	Berkshire Hathaway Specialty Insurance
MASTER POLICY #:	47-XSF-304056-01
LIMITS:	$25,000,000 Each Occurrence $25,000,000 Aggregate $25,000,000 Products & Completed Operations
INSURER:	Indemnity Insurance Company of North America (excess of Berkshire Hathaway Specialty Insurance)

MASTER POLICY #:	XSM-G46798673 001	
LIMITS:	$25,000,000	Each Occurrence
	$25,000,000	Aggregate
	$25,000,000	Products & Completed Operations
INSURER:	Starr Indemnity & Liability Company (sits excess of Indemnity Insurance Company of North America)	
MASTER POLICY #:	1000023859	
INSURER:	The Ohio Casualty Insurance Company (sits excess of Indemnity Insurance Company of North America)	
MASTER POLICY #:	ECO2358071429	

(50M x 50M shared by Starr & Ohio Casualty Insurance Company Liberty)

LIMITS:	$50,000,000	Each Occurrence
	$50,000,000	Aggregate
	$50,000,000	Products & Completed Operations

TERMS & CONDITIONS: Subject to Lead and Underlying Layer Policy Terms.

Primary and Non-Contributing: Workers' Compensation and Employers Liability insurance is primary and non-contributing with respect to any persons (other than The University of Texas System's employees) covered by such insurance. Commercial General Liability, Umbrella/Excess and Builders Risk insurance is primary insurance and non-contributing with any other insurance carried by the enrolled parties.

Assignment: In consideration of The University of Texas System purchasing ROCIP insurance as outlined above, the enrolled parties will assign to The University of Texas System all return premiums, dividends and other monies due or to become due in connection with the insurance which The University of Texas System provides under the ROCIP, all of which will inure to the benefit of the ROCIP. The enrolled parties will execute such further documentation as may be required by The University of Texas System to effect this assignment.

Waiver of Subrogation Rights: Except for the amount of the deductibles as stated elsewhere in this contract, the enrolled parties each on their own behalf and on behalf of anyone claiming by, through or under them, whether by way of subrogation or otherwise, hereby waive any and all subrogation rights which they may now or hereafter have against each other and the parent, related and affiliated companies, the successors and assigns of each other, in connection with the performance of the Work to the extent such subrogation rights are not the result of any intentional wrongful act or omission of the party causing such loss and are covered losses under the insurance provided hereunder.

If The University of Texas System Elects Not to Continue the ROCIP

If The University of Texas System, for any reason, is unable to furnish coverage, elects to discontinue the ROCIP, modifies the limits of liability provided in the ROCIP, or requests that an enrolled party withdraw from the ROCIP, then, upon sixty (60) days written notice from The University of Texas System, the enrolled party specified by The University of Texas System in such notice, will obtain at The University of Texas System's expense and thereafter maintain during the performance of the Work, all (or a portion thereof as specified by The University of Texas System) of the insurance required to be provided by excluded parties and as otherwise required under the contract documents, and The University of Texas System will thereafter no longer be obligated to furnish all or a part of such insurance through the ROCIP. The form, content, limits of liability and cost of such insurance and the insurer issuing such insurance secured by the enrolled party pursuant to the provisions of this section will be subject to The University of Texas System's approval, which approval will not be unreasonably delayed or withheld.

Enrolled parties will be reimbursed for the cost of their insurance based on the cost of their practice programs in place at time of cancellation of the ROCIP.

4

Contractor Responsibilities

Throughout the course of the project, contractors will be responsible for reporting and maintenance of certain records as outlined in this section.

Contractors and Subcontractors are required to cooperate with The University of Texas System and its ROCIP administrator in all aspects of ROCIP operation and administration. Responsibilities of the Contractors and Subcontractors include:

- Including ROCIP provisions in all subcontracts as appropriate
- Enrolling in the ROCIP via the MWrap portal
- Providing timely evidence of insurance to the ROCIP administrator
- Notifying the ROCIP administrator of all subcontracts awarded
- Cooperating with the ROCIP administrator's requests for information
- Maintaining and reporting monthly payroll records and Audit Participation
- Notifying Administrator of Project Change Orders
- Contract Close Out
- Complying with insurance, claim and safety procedures
- Notifying the ROCIP administrator immediately of any insurance cancellation or non-renewal (Contractor-required insurance)

Contractor Bids—ROCIP Provisions

Failure of enrolled parties to enforce the enrollment of all Contractors and Subcontractor(s) of any tier does not relieve the enrolled parties of the financial responsibility for their insurance deductions. The University of Texas System, maintains the right to pursue insurance deductions for all Subcontractors of any tier through the first tier General Contractor(s).

Any fines assessed by a governmental entity as the result of late enrollment will be assessed against the responsible enrolled parties.

Contractor Bids—Net Bids

Contractor/Subcontractors eligible to enroll in the ROCIP shall bid their work net of insurance, excluding their onsite Workers' Compensation, Employer's Liability, General Liability and Umbrella/Excess Liability from its bid/contract price. Change orders must also be priced to exclude these costs.

Unless otherwise agreed, the enrolled entities are required to remove the total cost of first dollar Workers' Compensation, Employer's Liability, General Liability and Umbrella/Excess Liability regardless of the risk financing technique employed for its Workers' Compensation and General Liability exposures, including but not limited to insurance premiums, expected losses with any retention or deductible amount, loss handling expenses and administrative expenses.

The original contract sum will be based on the total estimated cost of the Work, **excluding** insurance costs.

Unless otherwise agreed to in the Agreement with Contractor, costs for overlapping insurance coverage maintained by the enrolled parties will not be reimbursable. All subsequent change orders will be submitted excluding insurance costs.

If the enrolled parties do not submit the required ROCIP enrollment information prior to beginning Work and a fine is assessed by any state regulatory body, the enrolled parties will be charged for the assessment prior to contract closeout.

Conflicts: In the event of a conflict, the provisions of the Contract Agreement will govern, then the provisions of the Project Insurance Manual.

Enrollment

Prior to the start of work at the Project Site, all Contractors and Subcontractors of any tier shall complete the Enrollment form via the MWrap web portal in order to bind coverage under the ROCIP.

All Contractors and Subcontractors must use Marsh's online "MWrap" system to enroll in the ROCIP, provide monthly payroll, and perform other important functions outlined in this Section.

Visit: https://MWrap.Marsh.com/contractorportal **to get started once you are awarded a contract.**

All forms referenced in this Section may be found on the MWrap portal. The ROCIP administrator shall provide instructions on how to access the MWrap portal.

UNDER NO CIRCUMSTANCES IS A CONTRACTOR AUTHORIZED TO BEGIN WORK ON SITE UNTIL MARSH HAS RECEIVED, PROCESSED, AND APPROVED THE REQUIRED ONLINE FORMS AND HAS ISSUED THE CONTRACTOR AND/OR SUBCONTRACTOR A CERTIFICATE OF INSURANCE EVIDENCING ROCIP COVERAGE IS IN PLACE.

The enrolled parties will complete and submit the online Enrollment form including uploading any required supporting documents to the ROCIP administrator, including evidence of their experience modification rating (EMR) as documented on the rate schedules of their current workers' compensation insurance program.

If General Contractor(s) will be subcontracting work out, a separate award should be issued via MWrap, and an Enrollment form must be completed by **each Subcontractor** of any tier and must be sent to the ROCIP administrator via the MWrap web portal.

In addition to the Enrollment form the enrolled parties shall provide The University of Texas System with a Certificate of Insurance, including endorsements, evidencing coverage outlined in Section 5, via MWrap (through the "Document" section of the portal). A sample certificate of insurance has been included in Section 6—of this manual.

The ROCIP administrator will provide a Certificate of Insurance evidencing ROCIP coverages naming the enrolled party as an insured. Where required by law, individual workers' compensation policies will be issued to the enrolled party.

NOTE: All questions regarding this procedure should be directed to the ROCIP administrator at Marsh as outlined in the Project Contact Directory.

Evidence of Insurance

Each Contractor and Subcontractor is required to provide the ROCIP administrator with appropriate evidence of insurance as outlined in Section 5 of this Manual—Contractor Insurance Requirements.

Subcontract Award Notification

Contractors and Subcontractors of any tier are not covered under the ROCIP until necessary enrollment information is properly completed and submitted to the ROCIP administrator, as described in the Enrollment section of this Manual.

ALL contract awards should be provided via MWrap. Contractor(s) or the appropriate Subcontractor will be responsible for reporting contracts awarded via the MWrap portal, which will prompt awarded Subcontractors to complete their respective Enrollment to the ROCIP.

Cooperation

The enrolled parties will:

1. Use the MWrap portal to submit all pertinent insurance information.
2. Furnish to The University of Texas System, its insurance representatives and/or to the ROCIP insurer, all information and documentation which the ROCIP may require in connection with the issuance of any policies, in such form and substance as The University of Texas System or its designee may require.
3. Furnish to The University of Texas System, its insurance representatives and/or the ROCIP insurer, on-site payroll reports on the forms as required and described in this Manual on a monthly basis for prior month (including months with no payroll).
4. Permit The University of Texas System, its insurance representatives and/or the ROCIP insurer to audit the enrolled parties books and records and provide documentation as may be required to assure accuracy of those payroll reports. The enrolled parties agree that their failure to submit documents as required may result in withholding progress payments until said payroll reports are received by The University of Texas System or its designee.
5. Promptly comply with the requirements, obligations and recommendations of The University of Texas System, its insurance representatives and/or ROCIP insurer so that the ROCIP may be properly administered and so that the insurance companies will continue to provide coverage under the ROCIP as specified in this the document. If the enrolled parties should fail to comply with any requirement, obligation or recommendation, The University of Texas System may withhold any payments due the enrolled parties until such time as they will have performed the requirements, obligations and recommendations as required by this Contract.
6. The enrolled parties will provide The University of Texas System or its insurance representatives with all information necessary for the issuance of said policies and will maintain and make available to the insurance companies payroll records and such other records relating to the Work as may be necessary for the proper computation of the insurance premiums.
7. The enrolled parties will cooperate with The University of Texas System with regard to administration and operation of the ROCIP. The enrolled parties' responsibilities will

include, but are not limited to: operations and insurance information; inclusion of ROCIP provisions in all subcontracts; notification to The University of Texas System's insurance representatives of all subcontracts awarded; maintenance and provision of monthly payroll records and other records as necessary for premium computation; compliance with applicable loss control (safety) and claims reporting procedures; maintenance of an OSHA Log to be provided monthly to The University of Texas System and/or their insurance representatives.

Any fines assessed for claims which are reported late are the responsibility of the Contractor and/or Subcontractor of any tier.

Payroll Reporting, Maintenance, and Audits

Payroll Reporting—for insurance and program purposes, each contractor agrees to keep and maintain an accurate record of payroll for operations at the Project Site. Contractors agree to furnish full and accurate payroll information and data in accordance with the requirements of The University of Texas ROCIP VII program to the ROCIP VII Administrator via the MWrap portal.

Payroll must be submitted via MWrap by each Contractor or Subcontractor at each of the following occurrences:

- Monthly on or by the 10th of each month, following the end of the previous month.
- Final: Due upon completion of sublet work or at Project Substantial Completion, whichever occurs first.

The payroll will identify the Project Site work-hours and payroll. Only the payroll of the Contractor's employees who perform duties at the Project Site should be included on the payroll report. This information will be used to provide the ROCIP insurer with information required to determine The University of Texas System's premium.

If you did not perform any work at the Project Site in a given month you must **still** submit your payroll form showing zero (0) payroll to date for the month.

Contractors with payroll reporting delinquencies will receive an auto generated notification from MWrap requesting response of activity in accordance with each contract under coverage.

The ROCIP insurer is required to file experience data for each enrolled party with the appropriate rating authority. The loss experience of the Contractor for Work performed on the Project Site may affect the experience modification factor of that Contractor.

To avoid paying premiums to your primary insurance provider on payroll associated with Work performed under the ROCIP, payroll reported as described above **should be excluded** from payrolls submitted to your primary insurer. In addition, there are a number of ways to endorse or modify your primary insurance to assist in this process. The workers' compensation policy issued to you and the certificate of insurance showing you as a named insured on the general liability policy may be used to provide evidence of your enrollment in the ROCIP to your primary insurer.

Payroll Maintenance—each enrolled party is required to maintain payroll records for the Project Site in accordance with the Basic Manual of Rules, Classifications, and Experience Rating Plan

for Workers' Compensation and Employers Liability Insurance. Such records allocate the payroll by Workers' Compensation classification(s) and shall exclude the excess or premium paid for overtime (i.e., only the straight time rate shall apply to overtime hours worked). Furthermore, such records shall limit the payroll for Executive Officers and Partners/Sole Proprietors to the limitations as stated in the state manual rules.

Payroll Audits—it is important that you properly classify payrolls, as these will be reported to the rating bureau for promulgation of future Experience Modifiers for your firm. All enrolled parties shall make available their books, vouchers, contracts, documents, and records, of any and all kinds, to the auditors of the ROCIP insurer or The University of Texas System's representatives at any reasonable time during the policy period, any extension, or during a final audit period as required by the insurance policies.

The Division of Workers' Compensation (DWC) a division of the Texas Department of Insurance (TDI), requires Zurich, the insurance carrier for The University of Texas System ROCIP Phase VII program, to report payrolls and losses incurred by insureds for onsite exposures which have occurred under the policies issued in a unit statistical report for calculation and publication of the contractor's experience modifier.

The audit reporting is conducted annually for each policy term by carriers per outlined requirements as described within Section 4 of the ROCIP Project Insurance Manual, Uniform General Conditions, and the Project Insurance Requirements (00 73 16).

Upon Contractors or Subcontractors Completion of Work or on policy expiration, The University of Texas System's insurance carriers have the right to audit payroll records. This audit will be completed within 60 days of receipt of all complete and accurate information from the Contractor.

Notification of Change Orders

Contractor(s) will notify Marsh (via MWrap), of any change orders issued to the 1st tier Contractors. 1st Tier Contractors will notify Marsh how that change order will be applied to their Subcontractors.

Change orders, field proceed orders, and/or construction change directives submitted by each enrolled parties shall ***exclude*** the cost of insurance.

Notice of Work Completion—Close-out of Each Contract

Contractor(s) will close-out each contract as the enrolled parties complete their work. No retention will be released until the close-out has been completed.

The enrolled parties must complete the "Closeout" via MWrap, for each contract that has been completed on the Project Site.

1. The ROCIP administrator will request "final" contract value from Awarding Contractor(s). If any payroll or documentation is missing, the ROCIP administrator will contact the enrolled party for the information and final contract cost for his Subcontractors.
2. If all payroll reported are in line, the ROCIP administrator will approve closeout form and the awarding Contractor and The University of Texas System will access closeout documentation via MWrap

3. The ROCIP insurer may audit the enrolled parties at time of close out.
4. Once close-out is complete, Awarding Contractor(s) will access (via MWrap) for closeout information of all enrolled parties involved.

The ROCIP administrator will verify all costs that appear to be out of line and discuss them with the awarding Contractors or the Subcontractor to determine if there were Subcontractors working that we were not properly notified or if there are high materials costs that can explain the discrepancies.

Once close out is reconciled, contractor will receive a communication from Marsh (via MWrap) advising how ROCIP coverage will respond beyond project substantial completion.

Claims Reporting

Each enrolled party shall follow the claims procedures as established by The University of Texas System. Enrolled parties agree to assist and cooperate in every manner possible in connection with the adjustment of all claims and demands in which The University of Texas System's insurer(s) is called on to adjust or defend. Refer to Section 7—Claims Reporting of this Manual.

Safety Procedures

Scope and Application

All Contractors and Subcontractors are required to comply with The University of Texas System Project Safety Requirements (01 35 23). These safety requirements are mandatory and will be strictly enforced. Non-compliance with this plan will be considered the same as non-compliance with any other contractual item.

The University of Texas System, at its discretion, will designate agents to act on its behalf in all matters relating to Work Site safety and health. The University of Texas System and its agents reserve and retain the right to stop work, remove Contractor and Subcontractor employees, and dismiss Contractors or Subcontractors when willful or repeated non-compliance with the Project Safety Requirements Manual occurs or when serious defective conditions or life threatening hazards and activities are identified.

Copies of the safety manual may be obtained from the **General Contractor** on each project.

5

Contractor-Provided Insurance Requirements

Insurance Requirements for Enrolled and Excluded Contractors

Refer to the complete Uniform General Conditions and the Project Insurance Spec in the Appendix of this manual.

Contractors and subcontractors are required to maintain coverage to protect against losses that occur away from the site or that are otherwise not covered under the ROCIP.

The ROCIP provides coverage for Work at the Project Site only

Insurance for the Work performed AWAY FROM THE PROJECT SITE by the enrolled parties include the following coverage:

- Workers' Compensation and Employers' Liability Insurance
- Commercial General Liability Insurance
- Commercial Automobile Liability Insurance (on and off project site)
- Umbrella/Excess Liability Insurance (if needed)
- Contractors Equipment Insurance (on and off project site)
- Aircraft Liability (if needed)

The enrolled parties will provide and maintain the types of insurance described below in a company or companies legally authorized to transact insurance business in the State of Texas. All insurers will be rated at least A-, VII or better in the current A.M. Best ratings or must be otherwise acceptable to The University of Texas System. The enrolled parties will maintain the specified insurance coverage until all obligations under this contract are satisfied.

The limits of liability shown for the insurance required of the enrolled parties are minimum limits only and are not intended to restrict the liability imposed on the enrolled parties for Work performed under their Contract.

Required Endorsements

Additional Insureds: Each policy required (except Worker's Compensation) will name as additional insured the Board of Regents of The University of Texas System its officials, directors, employees, representatives, agents, consultants, and volunteers of each and all other indemnitees as "Additional Insured."

Waiver of Subrogation. To meet the requirements of Article 2.2, of the Uniform General Conditions, all policies shall contain a Waiver of Subrogation in favor of the Board of Regents of The University of Texas System, their respective agents, consultants, servants and employees of each and all other indemnitees.

Waiver Of Property Damage and Right of Recovery. To meet the requirements of the Uniform General Conditions (UGC), all policies shall contain a written agreement to waive the Contractor's and each enrolled Subcontractor's right for recovery of physical damage or loss to their respective properties against each other for damages, losses or claims arising out of or in connection with this Project and this Contract. This written waiver shall also extend to the benefit of The Board of Regents of The University of Texas System, its respective agents, consultants, servants and employees. This waiver of the right of recovery for property damage shall be binding upon any property (real or personal), builders risk, automobile, aircraft watercraft, tools or equipment insurer as respects any subrogation rights that such insurer may possess by virtue of any payments of damage or loss.

Each enrolled party will pay all insurance premiums for such insurance, including any charges for required waivers of subrogation or the endorsement of additional insureds.

***Primary and Non-Contributing*:** All Insurance coverage listed above is required to be to be primary and non-contributory.

***Certificates of Insurance*:** The enrolled parties and excluded parties will provide certificates of insurance to The Board of Regents of The University of Texas System as evidence that policies specified in this section providing the required coverage, conditions, and limits are in full force and effect. Certificates of insurance can be uploaded via MWrap and addressed as follows:

The Board of Regents of the University of Texas System
c/o Marsh USA Inc (ROCIP Admin)
1717 Main Street; Suite 4400
Dallas, Texas 75201

***Notice of Cancellation*:** All insurance policies and certificates of insurance will include a requirement providing for thirty (30) days prior written notice to The University of Texas System of any cancellation or reduction of coverage. If any such notice is given, The University of Texas System will have the right to require that a substitute policy be obtained prior to said cancellation and appropriate evidence thereof be provided. Enrolled parties and excluded parties will immediately notify The University of Texas System and will cease operations on the occurrence of any such cancellation or reduction and will not resume operations until the required insurance is in force and new certificates of insurance have been filed with The University of Texas System.

Insurance Requirements of Excluded Parties

The insurance requirements as defined in the Project Insurance Requirements (00 73 16) and the UGC section 5.2 outline the coverage that should be in place for any given project.

6

ROCIP Enrollment Procedures and Forms

Award of Contract/Subcontract does not automatically enroll a Contractor/Subcontractor as a participant in the Rolling Owner Controlled Insurance Program (ROCIP). Each Contractor or Subcontractor must properly complete the online forms in the following checklist for Marsh to enroll in the ROCIP.

This section contains the forms needed for enrolling, reporting payroll, change orders and other administration of the ROCIP.

Enrollment Process—Checklist of Required Submittals

For assistance in completing these forms, please contact the ROCIP administrator identified in the Project Contact Directory. As previously noted, all Contractors and Subcontractors must use the ROCIP Administrator's online MWrap system to complete and submit these forms and documents.

☐ **Enrollment**
This form provides information that Marsh must receive in order to issue the Contractor/Subcontractor a Certificate of Insurance for ROCIP coverage. Marsh will forward the information to the ROCIP insurance company (the "carrier") for issue of an individual Workers' Compensation policy. Issue of a Certificate of Insurance must be completed prior to commencement of any Work.

☐ **Contractor/Subcontractor's Provided Certificate of Insurance (see sample)**
The ROCIP does not provide any of the insurance coverages that are exempted by —00 73 16 (Project Insurance Requirements) and the Uniform General Conditions within the front end documents to the Contract. As part of the enrollment process, The University of Texas System requires all participants to provide a certificate of insurance, together with any contractually required endorsements and meeting the requirements outlined in this Procedure.

☐ **Classification of Operations Pages— Contractor Provided Workers' Compensation**
To complete the enrollment process, companies must provide copies of Workers' Compensation "Declarations Page" and evidence of their current Experience Modification Rate (EMR) as detailed within the "Classification of Operations Pages" (Rate Schedules).

Contractor/Subcontractor shall submit all these requirements to Marsh for review via the MWrap portal. Upon acceptance, Marsh will furnish each enrolled Contractor/Subcontractor a certificate of insurance evidencing ROCIP coverage. Marsh will transmit additional copies to the Contractor and The University of Texas System. The Contractor/Subcontractor will then be authorized (for insurance obligations) to begin Work. **UNDER NO CIRCUMSTANCES SHALL ANY COMPANY BEGIN WORK UNTIL A PROPERLY EXECUTED INSURANCE CERTIFICATE HAS BEEN ISSUED TO AND ACCEPTED BY THE UNIVERSITY OF TEXAS SYSTEM (or by Marsh on behalf of The University of Texas System).**

The University of Texas System Rolling Owner Controlled Insurance Program (ROCIP)

AUDIT RIGHTS

In the event the undersigned Contractor or Subcontractor is awarded a contract, such party will permit THE UNIVERSITY OF TEXAS SYSTEM or its Representative to inspect the insurance policies, audit methods and rates used in determining any insurance premium deduction or credit proposed or accepted by THE UNIVERSITY OF TEXAS SYSTEM. Requests for inspection of any policies or payroll records will be made in writing ten (10) days in advance of any review, which will be conducted at the project site or an office near the site.

ASSIGNMENT

The undersigned Contractor or Subcontractor hereby assigns transfers and sets over absolutely unto THE UNIVERSITY OF TEXAS SYSTEM all right, title and interests to any and all returns of premium, dividends, discounts, or other adjustments including retrospective adjustments to THE UNIVERSITY OF TEXAS SYSTEM ROCIP. This assignment shall pertain to the ROCIP policies as now written, as subsequently modified, rewritten, or replaced by THE UNIVERSITY OF TEXAS SYSTEM ROCIP insurance company (s) including any additional amount of coverages as a result thereof. The undersigned Contractor or Subcontractor also assigns its rights of cancellation of all insurance policies provided, to the undersigned, by THE UNIVERSITY OF TEXAS SYSTEM. This assignment is only valid for those insurance policies that have their premiums paid by THE UNIVERSITY OF TEXAS SYSTEM.

COMPLIANCE

The undersigned Contractor or Subcontractor hereby agrees that all THE UNIVERSITY OF TEXAS SYSTEM ROCIP requirements will be met on a timely basis; including but not limited to: enrollment documents for Subcontractors, monthly payroll and work hour reports, policy maintenance and evidence of off-site coverage, loss control recommendations and requirements, and prompt claims reporting and management cooperation.

Signature: _____ Date: _____

Name (print): _____ Title: _____

Return forms to:

Marsh USA
Attn.: Marsh Administrator
Email: UT.ROCIPFaxes@marsh.com
Fax# : 888 501 9769

Sample Certificate of Insurance Required for Subcontractor

Sample Off-Site Certificate of Insurance	**Date Issued:**
PRODUCER [Name, Address & Telephone #]	This certificate is issued as a matter of information only and confers no rights upon the Certificate Holder. This Certificate does not amend, extend or alter the coverage afforded by the policies below.
INSURED **YOUR NAME AND ADDRESS**	COMPANIES AFFORDING COVERAGE with A- VII or Better Rated Carrier through AM Best
	COMPANY A
	COMPANY B
	COMPANY C
	COMPANY D

COVERAGES

This is to certify that the Policies listed below have been issued to the Named Insured above for the Policy Period indicated, notwithstanding any requirement, term or condition of any contract or other document with respect to which this certificate may be issued or may pertain, the insurance afforded by the policies described herein is subject to all the terms, exclusions and conditions of such policies. Limits shown may have been reduced by paid claims.

CO LTR	*TYPE OF INSURANCE*	POLICY NUMBER	POLICY EFFECTIVE DATE	POLICY EXPIRATION DATE	LIMITS	
	GENERAL LIABILITY				GENERAL AGGREGATE	$2,000,000
	X COMMERCIAL GENERAL LIABILITY		MUST COVER		PRODUCTS-COMP/OP AGG	$2,000,000
	CLAIMS MADE X OCCUR		THE DURATION OF CONTRACT		PERSONAL & ADV INJURY	$1,000,000
	OWNERS & CONTRACTORS PROTECTIVE				EACH OCCURRENCE	$1,000,000
					FIRE DAMAGE (Any one fire)	
					MED EXP (Any one Person)	
	AUTOMOBILE LIABILITY		MUST COVER		COMBINED SINGLE LIMIT	$1,000,000
	X ANY AUTO		THE DURATION OF CONTRACT			
	ALL OWNED AUTOS				BODILY INJURY (Per Person)	$
	SCHEDULED AUTOS					
	X HIRED AUTOS				BODILY INJURY (Per Accident)	$
	X NON-OWNED AUTOS					
					PROPERTY DAMAGE	$
	EXCESS LIABILITY				EACH OCCURRENCE	If needed
	X UMBRELLA FORM				AGGREGATE	
	OTHER THAN UMBRELLA FORM					
	WORKER'S COMPENSATION AND EMPLOYERS' LIABILITY OR LOCALLY PRESCRIBED EQUIVALENT IN THE STATE OF TEXAS		MUST COVER THE DURATION OF CONTRACT		X WC STATU-TORY LIMITS	
					EL EACH ACCIDENT	$1,000,000
					EL DISEASE—POLICY LIMIT	$1,000,000
					EL DISEASE—EA EMPLOYEE	$1,000,000
					EACH OCCURRENCE	

DESCRIPTION OF OPERATIONS/ LOCATIONS/ VEHICLES/ SPECIAL ITEMS (LIMITS MAY BE SUBJECT TO RETENTIONS)
The insured shall name Board of Regents of The University of Texas System and others as required by contract, as **Additional Insured** and such coverage afforded as additional insureds shall apply as Primary Insurance. A **Waiver of Subrogation** in favor of "Board of Regents of The University of Texas System, the architect, their subsidiaries, related and/or affiliated companies of each and their respective officials, directors, employees, representatives, agents and volunteers, and assigns of each, and any others shall be provided by the insured.

CERTIFICATE HOLDER	
Board of Regents of The University of Texas System c/o ROCIP administrator @ Marsh USA 1717 Main St.; Suite 4400 Dallas, Texas 75201	CANCELLATION. Should any of the above described policies be cancelled before the expiration date thereof, notice will be delivered in accordance with the policy provisions. AUTHORIZED SIGNATURE:

THIS CERTIFICATE MUST BE SIGNED BY AN AUTHORIZED REPRESENTATIVE, AGENT OR BROKER

7

Claim Reporting/Posting Procedures

This section describes basic procedures for posting requirements and reporting various types of claims: workers' compensation, employers' liability, general liability, and completed ops

All Contractors and Subcontractors will strictly adhere to specific guidelines for the reporting of all industrial incidents involving their own employees and their Subcontractor's employees.

All Contractors and Subcontractors are to instruct their employees to **IMMEDIATELY** report all incidents, injuries and damages from the Project Site to the **Project Safety Coordinator (PSC).**

All Contractors and Subcontractors are to provide, upon request, any additional information regarding the incident and to cooperate fully in all incidents and claim-related investigations.

The Texas Workers' Compensation Act and Rules require the employer to post and or complete certain forms. These forms are discussed below with samples of appropriate forms, and decision maps included in Appendix, Section 3 of this manual.

Any fines assessed for claims which are reported late are the responsibility of the Contractor.

Workers' Compensation Posting Requirements

Notice 6: Notice To Employees Concerning Workers' Compensation in Texas

Per Rule 110.101 (e) (1) of the Texas Department of Insurance, Division of Workers' Compensation, DWC Notice 6 is required to advise your employees that you have workers' compensation insurance through a commercial insurance company and to advise your employees of the Texas Department of Insurance, Division of Workers' Compensation's toll free number to obtain additional information about their workers' compensation rights.

Notices in English, Spanish and any other language common to the employer's employee population must be posted, and:

1. Prominently displayed in the employer's personnel office, if any;
2. Located about the workplace in such a way that each employee is likely to see the notice on a regular basis;
3. Printed with a title in at least 26 point bold type, subject in at least 18 point bold type, and in text in at least 16 point normal type; and
4. Contain the exact words as prescribed in Rule 110.101 (e) (1).

The following notice(s) meet the above requirements. Failure to post or to provide notice as required in the rule is a violation of the Act and Division rules. The violator may be subject to administrative penalties.

Notice 8: Required Workers' Compensation Coverage

Pursuant to Workers' Compensation Rule 110.101 (d)(7), a Contractor engaged in a building or construction project for a governmental entity is required to post a notice on each project site informing all persons providing services on the project that they are required to be covered by workers' compensation insurance. The notice required by this does not satisfy other posting requirements imposed by the Texas Workers' Compensation Act or other Workers' Compensation Rules. This notice must meet Worker's Compensation Rule 110.101.

Workers' Compensation Claim Reporting

- Each employer is initially responsible for providing first aid to their injured employee, followed by notification to the General Contractor Project Safety Coordinator (PSC).
- The General Contractor's Project Safety Coordinator (PSC) will complete the top portion of the Medical Authorization To-Treat form and ask the injured employee to acknowledge that a post-accident drug test will be performed.
- The Project Safety Coordinator (PSC) will accompany the injured worker to the medical clinic for initial treatment.
- The Medical Authorization To-Treat form will be presented to the medical clinic.
- Upon return to the work site each injured worker will be provided with **"Notice of Injured Employee Rights and Responsibilities" by the Project Safety Coordinator (PSC)**
- Following the injured workers' visit to the clinic both the Project Safety Coordinator (PSC) and employer should be updated on the injured employee's work status.
- The employer of the injured worker will assist in the completion of the required First Report of Injury (FROI) incident report. The ROCIP VII Form CL-1 Workers' Compensation Loss form collects all necessary information required to populate the State's First Report of Injury Form (DWC Form 1) and eases the reporting of the claim via Zurich's early notification system.
- The Project Safety Coordinator (PSC) will call Zurich's Claim Call Center to report the loss. Call 877-928-4531.
- Should the need arise to provide the injured worker with a Bona Fide job offer letter, a sample letter is included in this manual.

All WC Claims notices should be submitted to: **Zurich North American**

Submit all medical bills to Zurich; P.O. Box 968023; Schaumburg, IL 60196-8023, excluding Drug Screen bills, which are the responsibility of the injured worker's employer for payment.

Upon completion of reporting the workers' comp claim telephonically, a first report of injury form (DWC Form 1) from the claim in-take center of Zurich will be mailed to you for your records. Retain this copy along with the OCIP documentation regarding this incident until the claim is resolved/closed.

For assistance with WC claim issues contact:

Kevin McClelland, Claims Advisor	John Santos, Claims Coordinator
Marsh USA	The University of Texas System
1717 Main Street, Suite 4400	220 West Seventh Street
Dallas, TX 75201	Austin, TX 78701
Email: kevin.mcclelland@marsh.com	Email: Jsantos@utsystem.edu
Phone: 214-303-8330	Phone: 512-579-5029
Fax: 214-303-8014	Fax: 512-499-4524

In the event of any claim resulting in an emergency for:

- ANY injury that can be expected to result in offsite medical treatment.
- ANY property or equipment damage that is expected to result in an insurance claim.

Contact must be made to at least one of the following:

Mark L. Schaeffer—OFPC	409-781-0069
Kevin McClelland—Marsh	214-303-8330
John Santos—UT System	512-579-5029

ANY event resulting in multiple injuries, anticipated hospitalization of injured worker(s), or removal from site by an ambulance—PERSONAL CONTACT MUST BE MADE; DO NOT LEAVE A MESSAGE.

Refer to the Decision Map (found in Appendix 3) for severity level of work related injuries.

THE UNIVERSITY OF TEXAS ROCIP PROGRAM
Workers' Compensation Claim Management Checklist

Internal Investigation

- Identify facts of the information for reporting to Zurich.
  - Who • What • When • Where • Why • How

Subrogation

- Identify and preserve evidence.
- Identify Third Parties who may be responsible for accident.
- Report information to Zurich.

Report Claim

- **Report immediately**
- Complete the Workers' Compensation Claim Form (DWC Form 1).
- Call Zurich's Call Center—877- 928- 4531 (non-Ike) 877- 856- 1825 (Ike Recovery projects)
- Provide the injured employee with "Notice of Injured employee Rights and Responsibilities in the Texas Workers' Compensation System."

On Questionable Claims

- **Report immediately**—when appropriate, use the word ***alleged*** in your description.
- Immediately call Marsh Claims Consultant and express your concerns regarding the claim.

Medical Care for Employee

- If medical treatment is needed, advice the Employee of the appropriate medical care facility for work related injuries. (Note: Emergency Rooms should only be used for treatment if the medical clinic is closed, or if the injury is considered severe or life threatening).
- Complete the "Authorization for Medical Treatment' form (ROCIP Form # CL-2) and give to injured worker. (Note: some sections need to be completed by the employer and others by the injured employee).
- Contractor or Subcontractor shall contact the medical care facility and advise that injured The University of Texas System (UTS) ROCIP worker is in route.
- A mandatory post-accident drug and alcohol screen will be performed at the medical facility at the Contractor's expense.

Continued Involvement in Management of the Claim

- Maintain communication with the Employee.
- Advise Zurich of any information that changes the direction of the claim.
- Be aware of the Employee's current medical condition.
- Review the DWC Form 73 (Texas Workers' Compensation Work Status Report) from the medical provider, noting any restrictions that might have been placed on the employee.

Return to Work

- Refer to the Return to Work Policy outlined in 01 35 23 Project Safety Requirements (Section 8) or equivalent site safety manual approved for this project.
- Coordinate modified duty with Zurich adjuster, employer and employee.
- Provide temporary modified duty when parameters and duration of restrictions are known.
- Complete the Bona Fide Offer of Employment form (ROCIP form #CL-4).

- Offer light/modified duty when a treating physician allows an injured worker to return to any type of employment that will not violate the specified restriction(s).
- Attach a copy of the DWC Form 73 (Texas Workers' Compensation Work Status Report) provided by the treating physician to the Bona Fide Offer of Employment Letter.
  - Letter must include:
    - Detailed physical description of work (i.e. allowable standing, sitting, etc.) consistent with the employee's abilities, knowledge and skill
    - Must offer training if necessary.
- Letter is presumed valid if provided in writing
- Have the employee sign in the presence of a witness; or, mail the letter along with the DWC Form 73, via certified mail, to the employee
  - Should the injured employee decline the Bona Fide Offer, Temporary Income Benefits may be stopped.
  - Send a copy of the letter, witness statement or postal receipt to Zurich.
- Need further assistance, contact Zurich.

- Complete a Supplemental Report of Injury form—DWC form 6
  - Within three days of the employee returning to work
  - Within three days when the employee, after returning to work, has additional day or days of disability because of the injury;
  - Within 10 days after the end of each pay period in which the employee has a change in earnings as a result of the injury during the time the employee is entitled to temporary income benefits.
  - Within 10 days after the employee resigns or is terminated.

Billing

- All Medical bills/invoices should be sent to Zurich.
- Drug Testing bills are to be paid by the employer of the injured worker.

Loss Runs

- Contact, Cheri Perches Zurich Account Manager at 713-787-7828 or via email at Cheri.Perches@zurichna.com
- A Contractor may only request and receive loss information on the Contractor's own employees.

For Questions Regarding Workers' Compensation or Zurich Issues

- Contact Kevin McClelland, Marsh**,** at 214-303-8330
- Contact John Santos, The University of Texas System Office of Risk Management, at 512-579-5029

RETURN TO WORK (RTW) POLICY
NOTE: This Return To Work Policy and the executed acknowledgement must be submitted to and will be maintained by the Controlling Contractor at the project site. No work may commence until this document is accepted.

_____ will conduct its construction activities safely and in accord with all prevailing safety rules and regulations.

In the event that an occupational injury occurs on this Project and renders an employee unable to perform normal duties, this company will commit its resources to the following:

- Modified duty assignments will be made available to any employee injured on this project who receives a physician's release with medical restrictions.
- The modified duty assignment will take place at the project site if possible.
- In order to comply with restrictions established by the treating physician's instructions, the assignment offered to the injured employee may include clerical work, material inventory, site cleanup, site layout, equipment maintenance, or any other task that will not exceed the prescribed restrictions.
- Any employee with an occupationally restrictive injury will receive a written "Bona Fide Offer of Employment" letter. The document will acknowledge the company's intent to furnish duty assignments based on the treating physician's instructions. This document will either be executed by the employee in the presence of a supervisory employee or it will be sent to the employee by Certified/Return Receipt Mail.
- The injured employee will be monitored for improvement and returned to full duty status as quickly as the treating physician allows.
- All injuries that occur on this Project will be reported immediately to the Controlling Contractor's superintendent and/or safety coordinator. The immediate supervisor for the injured employee will obtain an "Authorization for Medical Treatment" from the Controlling Contractor before leaving the site for treatment by a medical professional.
- A responsible company representative (immediate supervisor) will transport any injured employee to the medical treatment facility. This representative will ensure that the treating physician receives a copy of this RTW policy and becomes aware of the company's intent to provide modified duties as required to meet any medical restrictions.
- In the event that an injured employee has to be transported by ambulance to an emergency medical treatment facility, a responsible company representative (immediate supervisor) will accompany (or follow) the injured employee and ensure that the treating physician receives a copy of this RTW policy and becomes aware of the company's intent to provide modified duties as required to meet any medial restrictions.
- A post incident drug test will be administered by the Owner's designated medical treatment facility. The Controlling Contractor will be notified of the results by a company representative only in the event of a confirmed positive drug test.
- An employee that is currently working under medical restrictions will NOT be terminated from employment until the Controlling Contractor and the insurance claims adjuster are consulted with and all agree that the action is justified.

CONTRACTOR ACKNOWLEDGEMENT

As a duly authorized representative of _____,
I hereby acknowledge, agree to, and submit the attached Return to Work Policy.

Name (print): _____

Signature: _____

Title: _____

Date: _____

This acknowledgement and a copy of the written Return To Work Policy must be submitted to the Controlling Contractor and will be maintained at the project by the Controlling Contractor. This company understands that no work at the Project may commence until this document is executed, submitted, and accepted by the Controlling Contractor.

Refer to the Project Safety Requirements

DRUG AND ALCOHOL POLICY

This project is a drug and alcohol free job site. The Contractor and all Subcontractors will maintain a drug and alcohol free environment on this project.

Each Contractor is responsible to ensure that its (sub) Contractors test their employees prior to reporting to work on the job site in order to maintain a drug and alcohol free job site as outlined in the Project Safety Specifications.

This policy is to be used in conjunction with the Subcontractor's own drug and alcohol program and in accordance with the contract.

In addition, each employee involved in an accident will be required to submit to a post-accident drug test that will be paid for by the Contractor.

The Contractor and all Subcontractors will obtain and maintain on file a signed "Notification and Consent—Employee Acknowledgement" (ROCIP form #13) for each employee prior to that employee commencing work on the job site.

ROCIP Form #13

NOTIFICATION AND CONSENT
EMPLOYEE ACKNOWLEDGMENT

I understand that a condition of my initial and continued assignment to The University of Texas System ROCIP job site is compliance with The University of Texas System ROCIP Drug and Alcohol Free Job site policy. The policy was developed to ensure that all of The University of Texas System ROCIP job sites are drug and alcohol free, and I hereby give my consent to, and authorize, any screening or medical procedures necessary to determine the presence and/or level of alcohol or drugs in my system. I further give my consent to the testing authority to confidentially release information regarding the results of the tests to an authorized representative of my employer or the Project Safety Coordinator assigned to the specific University of Texas ROCIP project you are working on. I realize that my refusal to sign this form constitutes a violation of The University of Texas System ROCIP policy, and for that refusal, I cannot be assigned to The University of Texas System ROCIP job site.

During my assignment to The University of Texas System ROCIP job site:

1. I hereby acknowledge and consent to abide by The University of Texas System ROCIP Drug and Alcohol Free Job site policy; and,
2. I consent to post-incident, reasonable suspicion, and random drug and alcohol screenings.

Signature	Social Security No.
Print Name	Date
Employer	Project Name
Witness	Print Witness Name

(Employer collects and maintain for all employees who will be working on-site.)

General Liability Claim Reporting

Commercial General Liability (GL) provides coverage for claims arising out of the project work at the Project Site or for personal injury, bodily injury and property damage to others by one's negligence. The GL coverage does not apply to property in your care, custody and control. GL coverage may apply when damage is done to property such as other adjacent buildings, cars, etc. or bodily injury to students, institutional staff, patients or visitors.

Such insurance will not include coverage for products liability for any product(s) manufactured, assembled, or otherwise worked upon away from the Project Site for any enrolled party or excluded party performing such off-site work.

General Liability premises coverage is provided for contractors returning to a "completed" job for repair or warranty work for a period of 2 years after substantial completion. Simultaneously the Extended Completed Operations is triggered when substantial completion has been issued. This Extended Completed Operations coverage is by statue of repose not to exceed 10 years.

Should a loss occur, and the parties believe it stems from the work that has been completed and accepted by UTS, the parties should immediately notify The University of Texas System Office of Risk Management and/or Marsh. The Institution or General Contractor should not undertake repairs until such notification has occurred and either The University of Texas System Office of Risk Management or Marsh's Claims Advocate has responded. The Institution and applicable parties should do what is necessary to mitigate damages. Refer to the Completed Operations Flow Chart at the end of this section.

Personal injury or property damage sustained by a third party constitutes a reportable event.

Whenever this occurs, the Contractor and Subcontractors will:

- Provide first aid if necessary.
- Notify the Project Safety Coordinator (PSC).
- Complete an incident report. Take pictures of any property damage. Obtain witness statements.
- Notify via phone the Marsh Claims Advocate and The University of Texas System Claims Coordinator of the incident and follow the call by emailing a copy of the incident report, pictures, witness statements, any bills incurred to-date. The Marsh Claims Consultant will undertake reporting of the claim to the carrier.

The General Liability claim representative will provide periodic claim status reports to the enrolled parties and the University of Texas System.

The Project Safety Coordinator (PSC) or their representative will assist in the investigation of the incident. However, the enrolled parties shall remain responsible for providing thorough information on all third party injuries or property damage claims and ensuring the claims have been promptly reported to the Project Safety Coordinator (PSC).

Professional Liability Claim Reporting

No coverage is provided for professional liability under the ROCIP. It is the sole responsibility of each Contractor and Subcontractor to report accidents involving their professional liability to their own insurers. Notice must be immediately reported to the Project Safety Coordinator (PSC) once a Contractor is made aware of any Professional Liability incident.

The Contractor will:

- Take measures necessary to preserve damaged property and to protect property from further damage.
- Immediately notify the Project Safety Coordinator (PSC).
- Establish accounts for recording the cost associated with the events as it affects property used in the Work.

Automobile Claim Reporting

No coverage is provided for automobile accidents under the ROCIP. It is the sole responsibility of each Contractor and Subcontractor to report accidents involving their automobiles to their own insurers.

HOWEVER, all accidents occurring in or around the job site must be reported to the Project Safety Coordinator (PSC). These accidents will be investigated with regard to any liability arising out of the Project construction activities that could result in future claims (i.e. due to the conditions of the roads, etc.) Each Contractor and Subcontractor shall cooperate in the investigation of all automobile accidents.

Other Claim Related Services

Detailed Claim Listings

Detailed claim listings are available upon request by contacting the Zurich Account Manager, Cheri Perches at 713-787-7828.

Claim Review

Claim reviews will be conducted quarterly, or as needed. Reviews will include The University of Texas System Office of Risk Management, The University of Texas Project Management, Insurer Representatives, and Marsh.

Lawsuits and Citations

All lawsuits (i.e. summons and complaint, citation and/or petition) filed against the entities insured by this program should be immediately forwarded on the date of receipt

by express overnight mail to the attention of the following individuals:

Kevin McClelland, Claims Advisor
Marsh USA
1717 Main Street, Suite 4400
Dallas, TX 75201
Email: kevin.mcclelland@marsh.com
Phone: 214-303-8330
Fax: 214-303-8014

John Santos, Claims Coordinator
The University of Texas System
220 West Seventh Street
Austin, TX 78701
Email: jsantos@utsystem.edu
Phone: 512-579-5029
Fax: 512-499-4524

Remember to keep a copy of all information sent for your files.

Marsh will assist in reporting the claim to the appropriate insurance carriers as related to the program and will work with the insurance carrier to assign Defense Counsel if needed.

DELAYS IN REPORTING COULD RESULT IN DEFAULT JUDGMENT AGAINST THE UTS ROCIP PROGRAM AND OR YOU.

8

Questions Commonly Asked About A ROCIP

a. What are the major reason(s) for The University of Texas System having a ROCIP?

There are several reasons The University of Texas System has decided to implement a ROCIP program, these include reducing the cost and redundancy of insurance coverages associated with construction.

To establish greater stability in insurance coverage for The University of Texas System and enrolled parties, by engaging a major insurer whose financial stability suggests that it will still be there to cover claims when and if they occur.

To unify and centralize the insurance resources available to support job-site safety, claim management and quality control inspections. The ROCIP will concentrate a greater amount of money for these important services.

Finally, to alleviate the adversarial relationship between enrolled parties and The University of Texas System at the time of a completed operations claim, allowing the claim to be defended and settled in a proactive manner, reducing claim costs for all enrolled parties.

b. As an enrolled party, how will this affect my costs?

The net cost effect should be about even. Under an ROCIP, your insurers will exclude coverage for risks insured by the ROCIP, thus reducing your insurance premiums by the amount your insurers would have otherwise charged you for the job.

While you could lose dividend values (if you have a workers' compensation dividend plan), dividends are not guaranteed and presumably not figured into bids.

In addition, by enrolling in the ROCIP, you will be the beneficiary of a highly focused safety and claims management plan that should result in better than average loss experience. To the extent this safety and claims management program has a positive influence on your loss experience; it could result in an improved experience modifier for you in future years.

c. How can I be sure my insurer will not charge me premium for ROCIP-enrolled work?

To ensure this does not happen, you need to notify your insurer(s) that you are participating in a ROCIP and provide them a description of the work and coverages being provided. This information can be shared through your agent or directly to the insurer.

Next, it will be important for you to keep accurate books to show what payroll is allocated to ROCIP Project(s). This will allow workers' compensation auditors from both your own insurer and the ROCIP insurer to audit the payroll accurately.

The same procedures will apply to the general liability insurance, though the basis of your premium charge may not be payroll -- it could be receipts or some other measure of exposure.

If you have questions about these issues during the bidding or as work proceeds, your broker, agent or underwriter should be able to help identify the distinction. If not, Marsh will be very happy to assist you in identifying the issues and, if needed, facilitating communication with your insurers.

d. Will Project safety requirements impair work efficiency?

All enrolled parties are expected to comply with the Safety Manual and all regulatory requirements. If your company is committed to safety, work efficiency should not be affected. Unsafe practices will not be tolerated and may be cause for dismissal from the project. Assistance is available should a question or concern arise regarding safe operating practices.

e. How will "Claims Management?" help me?

Claims Management will oversee a thorough investigation of every serious accident. The causes will be clearly understood, to the extent they can be known, and will allow for proper preparation of defense against possible future litigation.

The relevant statistical outcome of actual loss experience will be shared with the enrolled parties, thus identifying patterns and causation that would otherwise not be seen. That will add strength to your loss prevention efforts.

Claim cost containment programs will be used, which reduces claim costs. From a historical and statistical perspective, a strong, integrated safety and claims management plan, produces better than average loss experience in most ROCIP projects across the country. That benefits every enrolled party.

f. Is there completed operations coverage beyond the completion of my work?

Yes, there is a completed operations extension period built into the ROCIP.

g. Will the ROCIP hurt my chances of getting or keeping competitive insurance rates?

Of itself, the ROCIP will not hurt your chances of getting or keeping competitive insurance rates. However, if a major portion of your work is in insured under ROCIP's, it may reduce the size of your reported non-ROCIP sales and payroll, thus reducing schedule and/or other rating credits.

That being said, your success in safety will have a lot to do with your attractiveness as a workers' compensation account in the future. To the extent the ROCIP's safety and claims management program has a positive influence on your loss experience, it could result in an improved experience modifier for you in future years.

h. What about my WC modifier? How will ROCIP losses affect it?

ROCIP losses and payroll experience will be reported to the Workers' Compensation Insurance Rating Bureau the same way your regular insurer reports your other loss and payroll data. If the ROCIP safety and loss containment efforts are meaningful for your operation, the loss ratio should be slightly better for ROCIP losses, thus reducing your future modifier.

Meanings of Words and Phrases

The following list of words and phrases include an explanation of meanings. However, they may be defined differently in other documents, and in that case, the definitions given in such documents will take precedence with respect to such documents.

Certificate of Insurance
An Accord document providing evidence of the existence of coverage for a particular insurance policy or policies.

ROCIP Administrator
Representatives of Marsh USA Inc.

Contract
A written agreement between The University of Texas System and Contractor(s) for specific Work OR an agreement between Contractor(s) and any tier of Subcontractor.

Contractor
The person, firm, joint venture, corporation or other party that has entered into a Contract with The University of Texas System to perform Work at the Project Site. The overall project Contractor is also referred to as “construction manager.” A Contractor is the party to a contract who is charged with the total construction and who enters into subcontracts for such work as electrical, plumbing, etc.

Contractor Enrollment
Enrollment is the beginning of a number of documents that must be completed for the Contractor to participate in the ROCIP. The documentation is defined at a Project level and will vary from Project to Project. Generally, the package will include contact information, location of records, general information regarding the Contractor and loss control program and may include an insurance premium worksheet.

Insureds
The University of Texas System and specifically enrolled Insured Parties. Insureds will also be other parties that The University of Texas System is required under contract to add as additional insureds.

Insurer
The ROCIP insurer(s) issuing a policy for coverages under the ROCIP.

Off-Site Insurance Certificate
Evidence of the Contractor’s Off-Site Insurance as stipulated in the contract documents for Automobile, Off-Site Workers’ Compensation, Off-Site General Liability. Evidence of an Excess/Umbrella Liability policy may be required to satisfy the contract limit requirements for the above coverages.

Project Site
"Project Site" shall mean those areas designated in writing by The University of Texas System for performance of the Work and such additional areas as may be designated in writing by The University of Texas System for Contractor's use in performance of the Work. Subject to the notification and other requirements for off-site locations, the term "Site" shall also include (a) property used for bonded storage of material for the Project approved by The University of Texas System, and (b) areas where activities incidental to the Project are being performed by General Contractor or Subcontractors covered by the worker's compensation policy included in the ROCIP, but excluding any permanent locations of Contractor or such covered Subcontractors.

The University of Texas System
The University of Texas System and any affiliated, subsidiary or associated companies as now exist or may hereafter be constituted or acquired. In addition, any corporations, partnerships, joint ventures, individuals or companies over which any of the above exercises financial or management control, as now exist or may hereafter be constituted or acquired.

Subcontractor
The person, firm, joint venture, corporation or other party that has entered into an Agreement with the General Contractor to perform Work at the Project Site.

An entity that is performing work under contract for a higher tier Contractor. Subcontractor must have a signed agreement to proceed with the Work.

Work
Operations as fully described in the Agreement, performed at or emanating directly from the Project Site.

Vendor/Supplier
A person or entity that supplies materials or equipment for work, including that fabricated to a special design, but who does not perform labor at the site.

REVISION LOG

The following is provided for convenience to the Owner, Architect/Engineer and Contractor to track changes between annual document issuances and is not to be considered by any party to be contractual or 100% complete.

Date	**Paragraph Revised**
12/1/15	Compliance with SB 1081, removal of Safety Spec and Safety Forms, clarification on when coverage ends.
10/10/17	Update to describe ROCIP VII coverage. Administration process revised to describe new MWrap enrollment process.

Marsh USA Inc.
Comerica Bank Tower
1717 Main Street, Suite 4400
Dallas, TX 75201-7357
+1 214 303 8000

ATTACHMENT B

ROCIP POLICY

ZURICH

Texas Accident Prevention Services Notice

Pursuant to Texas Labor Code §411.066, Zurich North America is required to notify its policyholders that accident prevention services are available from Zurich North America at no additional charge. These services may include surveys, recommendations, training programs, consultations, analyses of accident causes, industrial hygiene, and industrial health services. Zurich North America is also required to provide return-to-work coordination services as required by Texas Labor Code §413.021 and to notify you of the availability of the return-to-work reimbursement program for employers under Texas Labor Code §413.022. If you would like more information, contact Zurich North America at 1-800-982-5964, or risk.engineering@zurichna.com for accident prevention services or 1-800-982-5964, and risk.engineering@zurichna.com for return-to-work coordination services. For information about these requirements call the Texas Department of Insurance, Division of Workers' Compensation (TDI-DWC) at 1-800-687-7080 or for information about the return-to-work reimbursement program for employers call the TDI-DWC at (512) 804-5000. If Zurich North America fails to respond to your request for accident prevention services or return-to-work coordination services, you may file a complaint with the TDI-DWC in writing at http://www.tdi.texas.gov or by mail to Texas Department of Insurance, Division of Workers' Compensation, MS-8, at 7551 Metro Center Drive, Austin, Texas 78744-1645.

Disclosure Statement

ZURICH®

It is our pleasure to present the enclosed policy to you
for presentation to your customer.

INSTRUCTION TO AGENT OR BROKER:

WE REQUIRE THAT YOU TRANSMIT THE ATTACHED/ENCLOSED DISCLOSURE STATEMENT TO THE CUSTOMER WITH THE POLICY.

Once again, thank you for your interest, and we look forward to meeting your needs and those of your customers.

Disclosure Statement

ZURICH®

NOTICE OF DISCLOSURE FOR AGENT & BROKER COMPENSATION

If you want to learn more about the compensation Zurich pays agents and brokers visit:

http://www.zurichnaproducercompensation.com

or call the following toll-free number: (866) 903-1192.

This Notice is provided on behalf of Zurich American Insurance Company

and its underwriting subsidiaries.

WORKERS COMPENSATION AND EMPLOYERS LIABILITY INSURANCE POLICY – INFORMATION PAGE

Insurance for this coverage part provided by:
ZURICH AMERICAN INSURANCE COMPANY

Servicing Office:
SOUTHEAST - ORLANDO
495 N. KELLER RD
SUITE 500
MAITLAND, FL 32751

1. Policy Number WC 0183286-01 Renewal of Number WC 0183286-00

Named Insured and Mailing Address
THE BOARD OF REGENTS OF THE
(SEE NAMED INSURED ENDORSEMENT)
210 W 7TH ST
AUSTIN TX 78701

Producer and Mailing Address
MARSH USA INC
1717 MAIN ST STE 4400
COMERICA BANK TOWER
DALLAS TX 75201-7343

Producer Code 36140-000

Other workplaces not shown above: See Schedule of Locations
FEIN: 17-4600023
NCCI Company No. 10863 ☐ New ☒ Renewal ☐ Rewrite of Prior Policy No. WC 0183286-00
This information page, with policy provisions and endorsements, if any, completes this policy.
Insured is: CORPORATION

2. Policy Period: From: 08-01-2018 to 08-01-2019 at 12:01 A. M. Standard Time at insured's mailing address.
Insured's Identification number(s): See Schedule Locations

3. A. Workers Compensation Insurance: Part One of the policy applies to the Workers' Compensation Law of the states listed here:
TEXAS

B. Employers Liability Insurance: Part Two of the policy applies to work in each state listed in Item 3.A.

The limits of liability under Part Two are:			
	Bodily Injury by Accident:	1,000,000	each accident
	Bodily Injury by Disease:	1,000,000	policy limit
	Bodily Injury by Disease:	1,000,000	each employee

C. Other States Insurance: Part Three of the policy applies to the states, if any, listed here:
ALL STATES EXCEPT ND, OH, WA, WY AND THOSE STATES LISTED IN 3 A.

D. This Policy includes these Endorsements and Schedules:
See Schedule of Forms and Endorsements.

4. The premium for this policy will be determined by our Manuals of Rules, Classifications, Rates and Rating Plans. All information required on the following Classification Schedule is subject to verification and change by audit.
See Classification Schedule

TOTAL ESTIMATED STANDARD PREMIUM	$
PREMIUM DISCOUNT	$
EXPENSE CONSTANT	$
PREMIUM FOR ENDORSEMENT	$
TAXES AND SURCHARGES	$
TOTAL ESTIMATED ANNUAL PREMIUM	$
MINIMUM PREMIUM	$
DEPOSIT PREMIUM	$

If indicated below, adjustment of premium shall be made:

☒ Annually ☐ Monthly
☐ Semi-Annually ☐ This is a Three Year Fixed Rate Policy
☐ Quarterly

Agent or Producer | Countersigned by Resident Licensed Agent | Date

SCHEDULE OF FORMS AND ENDORSEMENTS

Policy Number: WC 0183286-01

Form Number & Edition Date		Form Name
WORKERS COMPENSATION FORMS AND ENDORSEMENTS		
U-WC-D-314-A	07-94	WORKERS COMPENSATION INFORMATION PAGE
U-WC-320-A	07-94	SCHEDULE OF FORMS AND ENDORSEMENTS
U-WC-321-A	07-94	NAMED INSURED SCHEDULE
U-GU-406-B	07-15	INSTALLMENT PREMIUM SCHEDULE
WC 99 00 02	10-99	SCHEDULE OF INSUREDS AND LOCATIONS
U-WC-315-A	07-94	CLASSIFICATION SCHEDULE
WC 00 00 00 C	01-15	INSURANCE POLICY
WC 00 03 01	01-94	TX ALTERNATE EMPLOYER ENDT
WC 00 03 02	04-84	DESIGNATED WORKPLACES EXCLUSION ENDT
WC 00 04 14	07-90	NOTIFICATION OF CHANGE IN OWNERSHIP ENDT
WC 00 04 19	01-01	PREMIUM DUE DATE ENDORSEMENT
WC 00 04 22 B	01-15	TERRORISM RISK PGM REAUTH ACT DISCL ENDT
WC 42 03 01 I	07-17	TEXAS AMENDATORY ENDORSEMENT
WC 42 03 04 B	06-14	TX-WAIVER OF OUR RIGHT TO RECOVER
WC 42 04 07	03-02	TX AUDIT PREM AND RETRO PREM ENDT
U-WC-255-C	05-95	LARGE DEDUCTIBLE ENDORSEMENT
WC990001A	04-10	WC AND EMPLOYERS LIABILITY IN WITNESS
U-WC-332-A	07-94	CANCELLATION AND NON-RENEWAL NOTICE ENDT
U-WC-332-A	07-94	KNOWLEDGE OF INJURY
U-WC-332-A	07-94	SOLE AGENT FOR INSUREDS
U-WC-332-A	07-94	NOTICE OF OCCURRENCE
U-WC-332-A	07-94	UNINTENTIONAL ERROR OR OMISSIONS ENDT
UGUD639A	07-07	COMBINED AGGREGATE DEDUCTIBLE

NAMED INSURED SCHEDULE

Policy Number: WC 0183286-01

NAMED INSURED

THE BOARD OF REGENTS OF THE UNIVERSITY OF TEXAS SYSTEM

THEIR SUBSIDIARIES, ASSOCIATED AND AFFILIATED COMPANIES, SUCCESSORS, OR ASSIGNS, AS NOW EXIST OR MAY HEREAFTER BE ACQUIRED OR FORMED, AND ANY CORPORATION OR OTHER BUSINESS ORGANIZATION WHICH THE PERSON OR ORGANIZATION SHOWN IN THE DECLARATIONS OF THIS POLICY OWNS, OPERATES OR CONTROLS, INCLUDING THE INTEREST AS SUCCESSOR TO ANY CORPORATION OR OTHER BUSINESS ORGANIZATION ACQUIRED, MERGED, OR TRANSFORMED INTO ANY OF THE FOREGOING, AND OTHER INTERESTS AS ARE NOW OR HEREAFTER RELATED TO THE PERSON OR ORGANIZATION SHOWN IN THE DECLARATIONS OF THIS POLICY.

ALL CONTRACTORS OF ANY TIER ENROLLED IN THE CONTROLLED INSURANCE PROGRAM AND WHO PERFORM WORK AT A DESIGNATED PROJECT SITE AS DEFINED IN THE DESIGNATED WORKPLACE EXCLUSION ENDORSEMENT (WC 00 03 02).

UNLESS OTHERWISE ENDORSED ON THIS POLICY, NO COVERAGE WILL BE PROVIDED TO VENDORS, SUPPLIERS, MATERIAL DEALERS, DEMOLITION, ABATEMENT CONTRACTORS, OR OTHER HAZARDOUS WASTE REMOVAL CONTRACTORS WHO VISIT, MAKE DELIVERIES TO OR WORK TEMPORARILY AT THE PROJECT SITE(S).

ZURICH

INSTALLMENT PREMIUM SCHEDULE

The total premium shown in the Declarations of this policy is made payable in installments, on the dates and in the amounts shown below.

NAMED INSURED	POLICY NUMBER	ENDORSEMENT NUMBER
THE BOARD OF REGENTS OF THE	WC 0183286-01	

PAYMENT DUE	STANDARD PREMIUM	TOTAL PREMIUM
08/16/18	$	$
TOTAL	$	$

Failure to pay the installment Premium by the Due Date shown shall constitute non-payment of premium for which we may cancel this policy.

Workers Compensation and Employers Liability Insurance Policy

ZURICH

Schedule of Insureds and Locations

Branch	Policy Number	Producer Code
ADDISON, TX 75001	WC 0183286-01	36140-000

SCHEDULE OF INSUREDS AND LOCATIONS

THE BOARD OF REGENTS OF THE UNIVERSITY OF TEXAS SYSTEM
FEIN: 174600023, SIC Code: 1542
210 W 7TH ST AUSTIN TX 78701

REFER TO MONTHLY REPORT IN FILE WHICH INCLUDES EACH PROJECT IDENTIFIED IN THE MARSH MONTHLY REPORT FOR THE UNIVERSITY OF TEXAS SYSTEM ROLLING OWNER CONTROLLED INSURANCE PROGRAM PHASE VII WITH COVERAGE FOR SUCH PROJECT BEGINNING ON THE NOTICE TO PROCEED DATE AS LISTED IN THE REPORT.

Issue Date: 08-01-2018

WORKERS COMPENSATION CLASSIFICATION SCHEDULE

Insurance for this coverage part provided by:
ZURICH AMERICAN INSURANCE COMPANY

Policy Number WC 0183286-01

ITEM 4.	CLASSIFICATION OF OPERATIONS		PREMIUM BASIS	RATES	
LOC.	Entry in this item, except as specifically provided elsewhere in this policy, does not modify any of the other provisions of this policy.	Code No.	Total Estimated Annual Remuneration	Per $100 of Remuneration	Estimated Annual Premium
	THE BOARD OF REGENTS OF THE UNIVERSITY OF TEXAS SYSTEM FEIN # 17-4600023 NAIC CODE 236220 210 W 7TH ST AUSTIN TX 78701				
	LANDSCAPE GARDENING & DRIVERS	0042	$		$
	TREE PRUNING, SPRAYING, REPAIRING TRIMMING OR FUMIGATING & DRIVERS	0106	$		$
	CARPET, RUG OR UPHOLSTERY CLEANING - SHOP OR OUTSIDE - & DRIVERS	2581	$		$
	PIPE BENDING - ALUMINUM	3111	$		$
	WELDING OR CUTTING NOC & DRIVERS	3365	$		$
	MACHINE SHOP NOC	3632	$		$
	COMPRESSOR STATION CONSTRUCTION & DRIVERS	3719	$		$
	ELECTRICAL APPARATUS INSTALLATION OR REPAIR - OUTSIDE - & DRIVERS	3724	$		$
	BOILER INSTALLATION OR REPAIR	3726	$		$
	BLASTING - ROCK - SPECIALTY CONTRACTORS - & DRIVERS	4000	$		$
	ANALYTICAL CHEMIST	4511	$		$
	EXTERMINATOR & DRIVERS	4519	$		$
	MASONRY NOC & DRIVERS	5022	$		$
	IRON OR STEEL: ERECTION: FRAME - STRUCTURES	5040	$		$
	PAINTING: STEEL STRUCTURES OR BRIDGES	5041	$		$
	IRON OR STEEL: ERECTION: BOLTED TANKS & DRIVERS	5057	$		$
	BURGLAR GUARDS OR BARS - INSTALLATION	5070	$		$
	ALUMINUM DOOR, WINDOW AND FRAME INSTALLATION & DRIVERS	5102	$		$

See next page

WORKERS COMPENSATION CLASSIFICATION SCHEDULE

Insurance for this coverage part provided by:
ZURICH AMERICAN INSURANCE COMPANY

Policy Number WC 0183286-01

ITEM 4.	CLASSIFICATION OF OPERATIONS		PREMIUM BASIS	RATES	
LOC.	Entry in this item, except as specifically provided elsewhere in this policy, does not modify any of the other provisions of this policy.	Code No.	Total Estimated Annual Remuneration	Per $100 of Remuneration	Estimated Annual Premium
	HOUSE FURNISHINGS INSTALLATION - NOC & UPHOLSTERING, DRIVERS	5102			$
	ELEVATOR ERECTION OR REPAIR	5160	$		$
	PLUMBING NOC & DRIVERS	5183	$		$
	ELECTRICAL WIRING & DRIVERS	5190	$		$
	ELECTRONIC BANK EQUIPMENT INSTALLATION & SERVICE	5191	$		$
	CONCRETE OR CEMENT WORK - FLOORS DRIVEWAYS, SIDEWALKS, CURBS AND GUTTERS - & DRIVERS	5200	$		$
	CONCRETE CONSTRUCTION - BRIDGES - & DRIVERS	5203	$		$
	CONCRETE CONSTRUCTION NOC & DRIVERS	5213	$		$
	PARKING AREAS AND DRIVEWAYS - CONSTRUCTION: ASPHALT - ALL OPERATIONS - & DRIVERS	5220	$		$
	TILE, STONE, MOSAIC OR TERRAZZO WORK - INSIDE	5348	$		$
	CARPENTRY NOC & DRIVERS	5403	$		$
	CARPENTRY - INSTALLATION OF CABINET WORK OR INTERIOR TRIM - & DRIVERS	5437	$		$
	LATHING & DRIVERS	5443	$		$
	GLAZIER - AWAY FROM SHOP - & DRIVERS	5462	$		$
	PLASTERING NOC & DRIVERS	5474	$		$
	ACOUSTICAL MATERIAL INSTALLATION & DRIVERS	5479	$		$
	PAPER HANGING & DRIVERS	5491	$		$
	STREET OR ROAD CONSTRUCTION - ALL OPERATIONS & DRIVERS	5506	$		$
	AIR CONDITIONING SYSTEMS - HEATING AND/OR COOLING: NOT PORTABLE: DUCT FABRICATION OR INSTALLATION & DRIVERS	5536	$		$
	SHEET METAL WORK - OUTSIDE - NOC & DRIVERS	5538	$		$

See next page

WORKERS COMPENSATION CLASSIFICATION SCHEDULE

Insurance for this coverage part provided by:
ZURICH AMERICAN INSURANCE COMPANY

Policy Number WC 0183286-01

ITEM 4. CLASSIFICATION OF OPERATIONS			PREMIUM BASIS	RATES	
LOC.	Entry in this item, except as specifically provided elsewhere in this policy, does not modify any of the other provisions of this policy.	Code No.	Total Estimated Annual Remuneration	Per $100 of Remuneration	Estimated Annual Premium
	ROOFING - ALL KINDS - & DRIVERS	5551	$		$
	CONTRACTOR - EXECUTIVE SUPERVISOR OR CONSTRUCTION SUPERINTENDENT	5606	$		$
	PILE DRIVING & DRIVERS	6003	$		$
	JETTY OR BREAKWATER CONSTRUCTION - ALL OPERATIONS TO COMPLETION - & DRIVERS	6045	$		$
	DRILLING NOC & DRIVERS	6204	$		$
	EXCAVATION NOC & DRIVERS	6219	$		$
	IRRIGATION OR DRAINAGE SYSTEM CONSTRUCTION & DRIVERS	6229	$		$
	SEWER CONSTRUCTION - ALL OPERATIONS - & DRIVERS	6306	$		$
	GAS MAIN OR CONNECTION CONSTRUCTION & DRIVERS	6319	$		$
	FENCE ERECTION - ALL TYPES	6400	$		$
	TELECOMMUNICATIONS CONTRACTOR: SERVICE CONNECTIONS & DRIVERS	7600	$		$
	TELECOMMUNICATIONS CONTRACTOR: INITIAL LINE INSTALLATION & DRIVERS	7602	$		$
	SECURITY GUARD SERVICE & DRIVERS	7720	$		$
	CONTRACTOR'S HEAVY EQUIPMENT REPAIR & DRIVERS	8107	$		$
	CONTRACTOR'S PERMANENT YARD	8227	$		$
	AIR FLOW BALANCING OF AIR CONDITIONING SYSTEMS	8601	$		$
	SALESPERSONS, COLLECTORS OR MESSENGERS - OUTSIDE	8742	$		$
	AUDITOR, ACCOUNTANT OR FACTORY COST OR OFFICE SYSTEMATIZER -TRAVELING	8803	$		$
	EXECUTIVE OFFICERS NOC - PERFORMING CLERICAL OR OUTSIDE SALESPERSONS DUTIES ONLY	8809	$		$
	CLERICAL OFFICE EMPLOYEES NOC	8810	$		$

See next page

WORKERS COMPENSATION CLASSIFICATION SCHEDULE

Insurance for this coverage part provided by:
ZURICH AMERICAN INSURANCE COMPANY

Policy Number WC 0183286-01

ITEM 4. CLASSIFICATION OF OPERATIONS			PREMIUM BASIS	RATES	
LOC.	Entry in this item, except as specifically provided elsewhere in this policy, does not modify any of the other provisions of this policy.	Code No.	Total Estimated Annual Remuneration	Per $100 of Remuneration	Estimated Annual Premium
	BUILDING SERVICE CONTRACTOR	9014	$		$
	WINDOW CLEANING - BUILDING OVER TWO STORIES - & DRIVERS	9170	$		$
	STREET CLEANING & DRIVERS	9402	$		$
	CONSTRUCTION ELEVATOR OR HOD HOIST INSTALLATION, REPAIR OR REMOVAL & DRIVERS	9529	$		$
	SIGN INSTALLATION, MAINTENANCE, REPAIR REMOVAL, OR REPLACEMENT NOC-AWAY FROM SHOP & DRIVERS	9554	$		$
	TOTAL CLASS PREMIUM				$
	BLANKET WAIVER	0930			$
	INCREASE LIMITS 1.4%	9812			$
	TOTAL SUBJECT PREMIUM				$
	TOTAL MODIFIED PREMIUM				$
	STANDARD TOTAL				$
	LARGE DEDUCTIBLE -74.6905%	9663			$
	EXPENSE CONSTANT	0900			$
	TERRORISM .02	9740			$
	TOTAL ESTIMATED PREMIUM				$
	FINAL TOTAL				$
	POLICY TOTAL ESTIMATED COST				$

WORKERS COMPENSATION AND EMPLOYERS LIABILITY INSURANCE POLICY

In return for the payment of the premium and subject to all terms of this policy, we agree with you as follows:

GENERAL SECTION

A. **The Policy**

This policy includes at its effective date the Information Page and all endorsements and schedules listed there. It is a contract of insurance between you (the employer named in Item 1 of the Information Page) and us (the insurer named on the Information Page). The only agreements relating to this insurance are stated in this policy. The terms of this policy may not be changed or waived except by endorsement issued by us to be part of this policy.

B. **Who is Insured**

You are insured if you are an employer named in Item 1 of the Information Page. If that employer is a partnership, and if you are one of its partners, you are insured, but only in your capacity as an employer of the partnership's employees.

C. **Workers Compensation Law**

Workers Compensation Law means the workers or workmen's compensation law and occupational disease law of each state or territory named in Item 3.A. of the Information Page. It includes any amendments to that law which are in effect during the policy period. It does not include any federal workers or workmen's compensation law, any federal occupational disease law or the provisions of any law that provide nonoccupational disability benefits.

D. **State**

State means any state of the United States of America, and the District of Columbia.

E. **Locations**

This policy covers all of your workplaces listed in Items 1 or 4 of the Information Page; and it covers all other workplaces in Item 3.A. states unless you have other insurance or are self-insured for such workplaces.

PART ONE
WORKERS COMPENSATION INSURANCE

A. **How This Insurance Applies**

This workers compensation insurance applies to bodily injury by accident or bodily injury by disease. Bodily injury includes resulting death.

1. Bodily injury by accident must occur during the policy period.
2. Bodily injury by disease must be caused or aggravated by the conditions of your employment. The employee's last day of last exposure to the conditions causing or aggravating such bodily injury by disease must occur during the policy period.

B. **We Will Pay**

We will pay promptly when due the benefits required of you by the workers compensation law.

C. **We Will Defend**

We have the right and duty to defend at our expense any claim, proceeding or suit against you for benefits payable by this insurance. We have the right to investigate and settle these claims, proceedings or suits.

We have no duty to defend a claim, proceeding or suit that is not covered by this insurance.

D. **We Will Also Pay**

We will also pay these costs, in addition to other amounts payable under this insurance, as part of any claim, proceeding or suit we defend:

1. reasonable expenses incurred at our request, but not loss of earnings;
2. premiums for bonds to release attachments and for appeal bonds in bond amounts up to the amount payable under this insurance;
3. litigation costs taxed against you;
4. interest on a judgment as required by law until we offer the amount due under this insurance; and
5. expenses we incur.

E. **Other Insurance**

We will not pay more than our share of benefits and costs covered by this insurance and other

© Copyright 2013 National Council on Compensation Insurance, Inc. All Rights Reserved.

insurance or self-insurance. Subject to any limits of liability that may apply, all shares will be equal until the loss is paid. If any insurance or self-insurance is exhausted, the shares of all remaining insurance will be equal until the loss is paid.

F. **Payments You Must Make**

You are responsible for any payments in excess of the benefits regularly provided by the workers compensation law including those required because:

1. of your serious and willful misconduct;
2. you knowingly employ an employee in violation of law;
3. you fail to comply with a health or safety law or regulation; or
4. you discharge, coerce or otherwise discriminate against any employee in violation of the workers compensation law.

If we make any payments in excess of the benefits regularly provided by the workers compensation law on your behalf, you will reimburse us promptly.

G. **Recovery From Others**

We have your rights, and the rights of persons entitled to the benefits of this insurance, to recover our payments from anyone liable for the injury. You will do everything necessary to protect those rights for us and to help us enforce them.

H. **Statutory Provisions**

These statements apply where they are required by law.

1. As between an injured worker and us, we have notice of the injury when you have notice.
2. Your default or the bankruptcy or insolvency of you or your estate will not relieve us of our duties under this insurance after an injury occurs.
3. We are directly and primarily liable to any person entitled to the benefits payable by this insurance. Those persons may enforce our duties; so may an agency authorized by law. Enforcement may be against us or against you and us.
4. Jurisdiction over you is jurisdiction over us for purposes of the workers compensation law. We are bound by decisions against you under that law, subject to the provisions of this policy that are not in conflict with that law.
5. This insurance conforms to the parts of the workers compensation law that apply to:
   a. benefits payable by this insurance;
   b. special taxes, payments into security or other special funds, and assessments payable by us under that law.
6. Terms of this insurance that conflict with the workers compensation law are changed by this statement to conform to that law.

Nothing in these paragraphs relieves you of your duties under this policy.

PART TWO
EMPLOYERS LIABILITY INSURANCE

A. **How This Insurance Applies**

This employers liability insurance applies to bodily injury by accident or bodily injury by disease. Bodily injury includes resulting death.

1. The bodily injury must arise out of and in the course of the injured employee's employment by you.
2. The employment must be necessary or incidental to your work in a state or territory listed in Item 3.A. of the Information Page.
3. Bodily injury by accident must occur during the policy period.
4. Bodily injury by disease must be caused or aggravated by the conditions of your employment. The employee's last day of last exposure to the conditions causing or aggravating such bodily injury by disease must occur during the policy period.
5. If you are sued, the original suit and any related legal actions for damages for bodily injury by accident or by disease must be brought in the United States of America, its territories or possessions, or Canada.

B. **We Will Pay**

We will pay all sums that you legally must pay as damages because of bodily injury to your employees, provided the bodily injury is covered by this Employers Liability Insurance.

The damages we will pay, where recovery is permitted by law, include damages:

1. For which you are liable to a third party by reason of a claim or suit against you by that third party to recover the damages claimed against

© Copyright 2013 National Council on Compensation Insurance, Inc. All Rights Reserved.

such third party as a result of injury to your employee;

2. For care and loss of services; and
3. For consequential bodily injury to a spouse, child, parent, brother or sister of the injured employee; provided that these damages are the direct consequence of bodily injury that arises out of and in the course of the injured employee's employment by you; and
4. Because of bodily injury to your employee that arises out of and in the course of employment, claimed against you in a capacity other than as employer.

C. **Exclusions**

This insurance does not cover:

1. Liability assumed under a contract. This exclusion does not apply to a warranty that your work will be done in a workmanlike manner;
2. Punitive or exemplary damages because of bodily injury to an employee employed in violation of law;
3. Bodily injury to an employee while employed in violation of law with your actual knowledge or the actual knowledge of any of your executive officers;
4. Any obligation imposed by a workers compensation, occupational disease, unemployment compensation, or disability benefits law, or any similar law;
5. Bodily injury intentionally caused or aggravated by you;
6. Bodily injury occurring outside the United States of America, its territories or possessions, and Canada. This exclusion does not apply to bodily injury to a citizen or resident of the United States of America or Canada who is temporarily outside these countries;
7. Damages arising out of coercion, criticism, demotion, evaluation, reassignment, discipline, defamation, harassment, humiliation, discrimination against or termination of any employee, or any personnel practices, policies, acts or omissions;
8. Bodily injury to any person in work subject to the Longshore and Harbor Workers' Compensation Act (33 U.S.C. Sections 901 et seq.), the Nonappropriated Fund Instrumentalities Act (5 U.S.C. Sections 8171 et seq.), the Outer Continental Shelf Lands Act (43 U.S.C. Sections 1331 et seq.), the Defense Base Act (42 U.S.C. Sections 1651–1654), the Federal Mine Safety and Health Act (30 U.S.C. Sections 801 et seq. and 901–944), any other federal workers or workmen's compensation law or other federal occupational disease law, or any amendments to these laws;
9. Bodily injury to any person in work subject to the Federal Employers' Liability Act (45 U.S.C. Sections 51 et seq.), any other federal laws obligating an employer to pay damages to an employee due to bodily injury arising out of or in the course of employment, or any amendments to those laws;
10. Bodily injury to a master or member of the crew of any vessel, and does not cover punitive damages related to your duty or obligation to provide transportation, wages, maintenance, and cure under any applicable maritime law;
11. Fines or penalties imposed for violation of federal or state law; and
12. Damages payable under the Migrant and Seasonal Agricultural Worker Protection Act (29 U.S.C. Sections 1801 et seq.) and under any other federal law awarding damages for violation of those laws or regulations issued thereunder, and any amendments to those laws.

D. **We Will Defend**

We have the right and duty to defend, at our expense, any claim, proceeding or suit against you for damages payable by this insurance. We have the right to investigate and settle these claims, proceedings and suits.

We have no duty to defend a claim, proceeding or suit that is not covered by this insurance. We have no duty to defend or continue defending after we have paid our applicable limit of liability under this insurance.

E. **We Will Also Pay**

We will also pay these costs, in addition to other amounts payable under this insurance, as part of any claim, proceeding, or suit we defend:

1. Reasonable expenses incurred at our request, but not loss of earnings;
2. Premiums for bonds to release attachments and for appeal bonds in bond amounts up to the limit of our liability under this insurance;
3. Litigation costs taxed against you;
4. Interest on a judgment as required by law until we offer the amount due under this insurance; and
5. Expenses we incur.

© Copyright 2013 National Council on Compensation Insurance, Inc. All Rights Reserved.

F. **Other Insurance**

We will not pay more than our share of damages and costs covered by this insurance and other insurance or self-insurance. Subject to any limits of liability that apply, all shares will be equal until the loss is paid. If any insurance or self-insurance is exhausted, the shares of all remaining insurance and self-insurance will be equal until the loss is paid.

G. **Limits of Liability**

Our liability to pay for damages is limited. Our limits of liability are shown in Item 3.B. of the Information Page. They apply as explained below.

1. Bodily Injury by Accident. The limit shown for "bodily injury by accident—each accident" is the most we will pay for all damages covered by this insurance because of bodily injury to one or more employees in any one accident.

   A disease is not bodily injury by accident unless it results directly from bodily injury by accident.
2. Bodily Injury by Disease. The limit shown for "bodily injury by disease—policy limit" is the most we will pay for all damages covered by this insurance and arising out of bodily injury by disease, regardless of the number of employees who sustain bodily injury by disease. The limit shown for "bodily injury by disease—each employee" is the most we will pay for all damages because of bodily injury by disease to any one employee.

   Bodily injury by disease does not include disease that results directly from a bodily injury by accident.
3. We will not pay any claims for damages after we have paid the applicable limit of our liability under this insurance.

H. **Recovery From Others**

We have your rights to recover our payment from anyone liable for an injury covered by this insurance. You will do everything necessary to protect those rights for us and to help us enforce them.

I. **Actions Against Us**

There will be no right of action against us under this insurance unless:

1. You have complied with all the terms of this policy; and
2. The amount you owe has been determined with our consent or by actual trial and final judgment.

This insurance does not give anyone the right to add us as a defendant in an action against you to determine your liability. The bankruptcy or insolvency of you or your estate will not relieve us of our obligations under this Part.

PART THREE
OTHER STATES INSURANCE

A. **How This Insurance Applies**

1. This other states insurance applies only if one or more states are shown in Item 3.C. of the Information Page.
2. If you begin work in any one of those states after the effective date of this policy and are not insured or are not self-insured for such work, all provisions of the policy will apply as though that state were listed in Item 3.A. of the Information Page.
3. We will reimburse you for the benefits required by the workers compensation law of that state if we are not permitted to pay the benefits directly to persons entitled to them.
4. If you have work on the effective date of this policy in any state not listed in Item 3.A. of the Information Page, coverage will not be afforded for that state unless we are notified within thirty days.

B. **Notice**

Tell us at once if you begin work in any state listed in Item 3.C. of the Information Page.

PART FOUR
YOUR DUTIES IF INJURY OCCURS

Tell us at once if injury occurs that may be covered by this policy. Your other duties are listed here.

1. Provide for immediate medical and other services required by the workers compensation law.
2. Give us or our agent the names and addresses of the injured persons and of witnesses, and other information we may need.
3. Promptly give us all notices, demands and legal

© Copyright 2013 National Council on Compensation Insurance, Inc. All Rights Reserved.

papers related to the injury, claim, proceeding or suit.

4. Cooperate with us and assist us, as we may request, in the investigation, settlement or defense of any claim, proceeding or suit.
5. Do nothing after an injury occurs that would interfere with our right to recover from others.
6. Do not voluntarily make payments, assume obligations or incur expenses, except at your own cost.

PART FIVE
PREMIUM

A. Our Manuals

All premium for this policy will be determined by our manuals of rules, rates, rating plans and classifications. We may change our manuals and apply the changes to this policy if authorized by law or a governmental agency regulating this insurance.

B. Classifications

Item 4 of the Information Page shows the rate and premium basis for certain business or work classifications. These classifications were assigned based on an estimate of the exposures you would have during the policy period. If your actual exposures are not properly described by those classifications, we will assign proper classifications, rates and premium basis by endorsement to this policy.

C. Remuneration

Premium for each work classification is determined by multiplying a rate times a premium basis. Remuneration is the most common premium basis. This premium basis includes payroll and all other remuneration paid or payable during the policy period for the services of:

1. all your officers and employees engaged in work covered by this policy; and
2. all other persons engaged in work that could make us liable under Part One (Workers Compensation Insurance) of this policy. If you do not have payroll records for these persons, the contract price for their services and materials may be used as the premium basis. This paragraph 2 will not apply if you give us proof that the employers of these persons lawfully secured their workers compensation obligations.

D. Premium Payments

You will pay all premium when due. You will pay the premium even if part or all of a workers compensation law is not valid.

E. Final Premium

The premium shown on the Information Page, schedules, and endorsements is an estimate. The final premium will be determined after this policy ends by using the actual, not the estimated, premium basis and the proper classifications and rates that lawfully apply to the business and work covered by this policy. If the final premium is more than the premium you paid to us, you must pay us the balance. If it is less, we will refund the balance to you. The final premium will not be less than the highest minimum premium for the classifications covered by this policy.

If this policy is canceled, final premium will be determined in the following way unless our manuals provide otherwise:

1. If we cancel, final premium will be calculated pro rata based on the time this policy was in force. Final premium will not be less than the pro rata share of the minimum premium.
2. If you cancel, final premium will be more than pro rata; it will be based on the time this policy was in force, and increased by our short-rate cancelation table and procedure. Final premium will not be less than the minimum premium.

F. Records

You will keep records of information needed to compute premium. You will provide us with copies of those records when we ask for them.

G. Audit

You will let us examine and audit all your records that relate to this policy. These records include ledgers, journals, registers, vouchers, contracts, tax reports, payroll and disbursement records, and programs for storing and retrieving data. We may conduct the audits during regular business hours during the policy period and within three years after the policy period ends. Information developed by audit will be used to determine final premium. Insurance rate service organizations have the same rights we have under this provision.

© Copyright 2013 National Council on Compensation Insurance, Inc. All Rights Reserved.

PART SIX
CONDITIONS

A. **Inspection**

We have the right, but are not obliged to inspect your workplaces at any time. Our inspections are not safety inspections. They relate only to the insurability of the workplaces and the premiums to be charged. We may give you reports on the conditions we find. We may also recommend changes. While they may help reduce losses, we do not undertake to perform the duty of any person to provide for the health or safety of your employees or the public. We do not warrant that your workplaces are safe or healthful or that they comply with laws, regulations, codes or standards. Insurance rate service organizations have the same rights we have under this provision.

B. **Long Term Policy**

If the policy period is longer than one year and sixteen days, all provisions of this policy will apply as though a new policy were issued on each annual anniversary that this policy is in force.

C. **Transfer of Your Rights and Duties**

Your rights or duties under this policy may not be transferred without our written consent.

If you die and we receive notice within thirty days after your death, we will cover your legal representative as insured.

D. **Cancelation**

1. You may cancel this policy. You must mail or deliver advance written notice to us stating when the cancelation is to take effect.
2. We may cancel this policy. We must mail or deliver to you not less than ten days advance written notice stating when the cancelation is to take effect. Mailing that notice to you at your mailing address shown in Item 1 of the Information Page will be sufficient to prove notice.
3. The policy period will end on the day and hour stated in the cancelation notice.
4. Any of these provisions that conflict with a law that controls the cancelation of the insurance in this policy is changed by this statement to comply with the law.

E. **Sole Representative**

The insured first named in Item 1 of the Information Page will act on behalf of all insureds to change this policy, receive return premium, and give or receive notice of cancelation.

© Copyright 2013 National Council on Compensation Insurance, Inc. All Rights Reserved.

WORKERS' COMPENSATION AND EMPLOYERS' LIABILITY POLICY WC 00 03 01

ALTERNATE EMPLOYER ENDORSEMENT

This endorsement applies only with respect to bodily injury to your employees while in the course of special or temporary employment by the alternate employer in the state named in the schedule. Part One (Workers Compensation Insurance) and Part Two (Employers Liability Insurance) will apply as though the alternate employer is insured.

Under Part One (Workers Compensation Insurance) we will reimburse the alternate employer for the benefits required by the workers compensation law if we are not permitted to pay the benefits directly to the persons entitled to them.

The insurance afforded by this endorsement is not intended to satisfy the alternate employer's duty to secure its obligations under the workers compensation law. We will not file evidence of this insurance on behalf of the alternate employer with any government agency.

We will not ask any other insurer of the alternate employer to share with us a loss covered by this endorsement.

Premium will be charged for your employees while in the course of special or temporary employment by the alternate employer.

The policy may be canceled according to its terms without sending notice to the alternate employer.

Part Four (Your Duties If Injury Occurs) applies to you and the alternate employer. The alternate employer will recognize our right to defend under Parts One and Two and our right to inspect under Part Six.

Schedule

1. Alternate Employer

THE BOARD OF REGENTS OF THE UNIVERSITY OF TEXAS SYSTEM

Address

2. **State of Special or Temporary Employment**

TX

DESIGNATED WORKPLACES EXCLUSION ENDORSEMENT

The policy does not cover work conducted at or from

ANY LOCATION EXCEPT THE CONFINES OF THE PROJECT SITE AS DESCRIBED BELOW:

ALL WORK CONDUCTED FROM THE CONSTRUCTION OPERATIONS ASSOCIATED WITH THE PROJECT(S) ENDORSED ONTO THIS POLICY OR THE FOLLOWING PROJECT(S) TO BE INCLUDED IN THE PROGRAM:

DESIGNATED PROJECT(S) REFER TO MONTHLY REPORT IN FILE WHICH INCLUDES EACH PROJECT IDENTIFIED IN THE MARSH MONTHLY REPORT FOR THE UNIVERSITY OF TEXAS SYSTEM ROLLING OWNER CONTROLLED INSURANCE PROGRAM PHASE VII WITH COVERAGE FOR SUCH PROJECT BEGINNING ON THE NOTICE TO PROCEED DATE AS LISTED IN THE REPORT.

"DESIGNATED PROJECT" MEANS:

THE PROJECT SHOWN IN THIS SCHEDULE, INCLUDING OPERATIONS ON THE PROJECT SITE OR LOCATION THAT ARE NECESSARY OR INCIDENTAL TO THE PROJECT AS DESCRIBED IN THE CONTRACT DOCUMENTS. "DESIGNATED PROJECT" INCLUDES THE WORK SITE(S) ASSOCIATED WITH SUCH "DESIGNATED PROJECT(S)" AND ANY OFF-SITE STAGING AREAS, SO LONG AS (1) THEY ARE DEDICATED SOLELY TO THE "DESIGNATED PROJECT(S)", AND (2) THE SPONSOR AGREES TO PROVIDE COVERAGE. ALSO INCLUDED ARE THOSE SOLELY DEDICATED AREAS IMMEDIATELY ADJACENT TO THE "DESIGNATED PROJECTS", INCLUDING BOUNDARIES OF LOCAL STREETS OR PUBLIC EASEMENT, IN WHICH THE ENROLLED SUBCONTRACTORS AT ANY TIER PERFORM WORK UNDER THEIR RESPECTIVE CONTRACTS.

Copyright 1983 National Council on Compensation Insurance.

NOTIFICATION OF CHANGE IN OWNERSHIP ENDORSEMENT

Experience rating is mandatory for all eligible insureds. The experience rating modification factor, if any, applicable to this policy, may change if there is a change in your ownership or in that of one or more of the entities eligible to be combined with you for experience rating purposes. Change in ownership includes sales, purchases, other transfers, mergers, consolidations, dissolutions, formations of a new entity and other changes provided for in the applicable experience rating plan manual.

You must report any change in ownership to us in writing within 90 days of such change. Failure to report such changes within this period may result in revision of the experience rating modification factor used to determine your premium.

© 1990 National Council on Compensation Insurance.

PREMIUM DUE DATE ENDORSEMENT

This endorsement is used to amend:

Section D. of Part Five of the policy is replaced by this provision.

PART FIVE
PREMIUM

D. **Premium** is amended to read:
You will pay all premium when due. You will pay the premium even if part or all of a workers compensation law is not valid. **The due date for audit and retrospective premiums is the date of the billing.**

© 2000 National Council on Compensation Insurance, Inc.

TERRORISM RISK INSURANCE PROGRAM REAUTHORIZATION ACT DISCLOSURE ENDORSEMENT

This endorsement addresses the requirements of the Terrorism Risk Insurance Act of 2002 as amended and extended by the Terrorism Risk Insurance Program Reauthorization Act of 2015. It serves to notify you of certain limitations under the Act, and that your insurance carrier is charging premium for losses that may occur in the event of an Act of Terrorism.

Your policy provides coverage for workers compensation losses caused by Acts of Terrorism, including workers compensation benefit obligations dictated by state law. Coverage for such losses is still subject to all terms, definitions, exclusions, and conditions in your policy, and any applicable federal and/or state laws, rules, or regulations.

Definitions

The definitions provided in this endorsement are based on and have the same meaning as the definitions in the Act .If words or phrases not defined in this endorsement are defined in the Act, the definitions in the Act will apply.

"Act" means the Terrorism Risk Insurance Act of 2002, which took effect on November 26, 2002, and any amendments thereto, including any amendments resulting from the Terrorism Risk Insurance Program Reauthorization Act of 2015.

"Act of Terrorism" means any act that is certified by the Secretary of the Treasury, in consultation with the Secretary of Homeland Security, and the Attorney General of the United States as meeting all of the following requirements:

a. The act is an act of terrorism.

b. The act is violent or dangerous to human life, property or infrastructure.

c. The act resulted in damage within the United States, or outside of the United States in the case of the premises of United States missions or certain air carriers or vessels.

d. The act has been committed by an individual or individuals as part of an effort to coerce the civilian population of the United States or to influence the policy or affect the conduct of the United States Government by coercion.

"Insured Loss' means any loss resulting from an act of terrorism (and, except for Pennsylvania, including an act of war, in the case of workers compensation) that is covered by primary or excess property and casualty insurance issued by an insurer if the loss occurs in the United States or at the premises of United States missions or to certain air carriers or vessels.

"Insurer Deductible" means, for the period beginning on January 1, 2015, and ending on December 31, 2020, an amount equal to 20% of our direct earned premiums, during the immediately preceding calendar year.

Limitation of Liability

The Act limits our liability to you under this policy. If aggregate Insured Losses exceed $100,000,000,000 in a calendar year and if we have met our Insurer Deductible, we are not liable for the payment of any portion of the amount of Insured Losses that exceeds $100,000,000,000; and for aggregate Insured Losses up to $100,000,000,000, we will pay only a pro rata share of such Insured Losses as determined by the Secretary of the Treasury.

Policyholder Disclosure Notice

1. Insured Losses would be partially reimbursed by the United States Government. If the aggregate industry Insured Losses exceed:

   a. $100,000,000, with respect to such Insured Losses occurring in calendar year 2015, the United States Government would pay 85% of our Insured Losses that exceed our Insurer Deductible.

   b. $120,000,000, with respect to such Insured Losses occurring in calendar year 2016, the United States Government would pay 84% of our Insured Losses that exceed our Insurer Deductible.

   c. $140,000,000, with respect to such Insured Losses occurring in calendar year 2017, the United States Government would pay 83% of our Insured Losses that exceed our Insurer Deductible.

   d. $160,000,000, with respect to such Insured Losses occurring in calendar year 2018, the United States Government would pay 82% of our Insured Losses that exceed our Insurer Deductible.

© Copyright 2015 National Council on Compensation Insurance, Inc. All Rights Reserved.

e. $180,000,000, with respect to such Insured Losses occurring in calendar year 2019, the United States Government would pay 81% of our Insured Losses that exceed our Insurer Deductible.

f. $200,000,000, with respect to such Insured Losses occurring in calendar year 2020, the United States Government would pay 80% of our Insured Losses that exceed our Insurer Deductible.

2. Notwithstanding item 1 above, the United States Government will not make any payment under the Act for any portion of Insured Losses that exceed $100,000,000,000.

3. The premium charge for the coverage your policy provides for Insured Losses is included in the amount shown in Item 4 of the Information Page or in the Schedule below.

Schedule

State	Rate	Premium
TX		$

© Copyright 2015 National Council on Compensation Insurance, Inc. All Rights Reserved.

TEXAS AMENDATORY ENDORSEMENT

This endorsement applies only to the insurance provided by the policy because Texas is shown in Item 3.A. of the Information Page.

GENERAL SECTION

B. **Who Is Insured** is amended to read:

You are insured if you are an employer named in Item 1 of the Information Page. If that employer is a partnership or joint venture, and if you are one of its partners or members, you are insured, but only in your capacity as an employer of the partnership's or joint venture's employees.

D. **State** is amended to read:

State means any state or territory of the United States of America, and the District of Columbia.

PART ONE—WORKERS COMPENSATION INSURANCE

E. **Other Insurance** is amended by adding this sentence:

This Section only applies if you have other insurance or are self-insured for the same loss.

F. **Payments You Must Make**

This Section is amended by deleting the words "workers compensation" from number 4.

H. **Statutory Provisions**

This Section is amended by deleting the words "after an injury occurs" from number 2.

PART TWO—EMPLOYERS LIABILITY INSURANCE

C. **Exclusions**

Sections 2 and 3 are amended to add:

This exclusion does not apply unless the violation of law caused or contributed to the bodily injury.

Section 6 is amended to read:

6. bodily injury occurring outside the United States of America, its territories or possessions, and Canada. This exclusion does not apply to bodily injury to a citizen or resident of the United States of America, Mexico or Canada who is temporarily outside these countries.

D. **We Will Defend**

This Section is amended by deleting the last sentence.

PART FOUR—YOUR DUTIES IF INJURY OCCURS

Number 6 of this part is amended to read:

6. Texas law allows you to make weekly payments to an injured employee in certain instances. Unless authorized by law, do not voluntarily make payments, assume obligations or incur expenses, except at your own cost.

PART FIVE—PREMIUM

A. **Our Manuals** is amended by adding this sentence:

In this part, "our manuals" means manuals approved or prescribed by the Texas Department of Insurance.

C. **Remuneration**

Number 2 is amended to read:

2. All other persons engaged in work that would make us liable under Part One (Workers Compensation Insurance) of this policy. This paragraph 2 will not apply if you give us proof that the employers of these persons lawfully secured workers compensation insurance.

E. **Final Premium**

Number 2 is amended to read:

2. If you cancel, final premium will be calculated pro rata based on the time this policy was in force. Final premium will not be less than the pro rata share of the minimum premium.

© Copyright 2016 National Council on Compensation Insurance, Inc. All Rights Reserved.

PART SIX—CONDITIONS

A. **Inspection** is amended by adding this sentence:

Your failure to comply with the safety recommendations made as a result of an inspection may cause the policy to be canceled by us.

C. **Transfer of Your Rights and Duties** is amended to read:

Your rights and duties under this policy may not be transferred without our written consent. If you die, coverage will be provided for your surviving spouse or your legal representative. This applies only with respect to their acting in the capacity as an employer and only for the workplaces listed in Items 1 and 4 on the Information Page.

D. **Cancelation** is amended to read:

1. You may cancel this policy. You must mail or deliver advance notice to us stating when the cancelation is to take effect.
2. We may cancel this policy. We may also decline to renew it. We must give you written notice of cancelation or nonrenewal. That notice will be sent certified mail or delivered to you in person. A copy of the written notice will be sent to the Texas Department of Insurance—Division of Workers' Compensation.
3. Notice of cancelation or nonrenewal must be sent to you not later than the 30th day before the date on which the cancelation or nonrenewal becomes effective, except that we may send the notice not later than the 10th day before the date on which the cancelation or nonrenewal becomes effective if we cancel or do not renew because of:
   a. Fraud in obtaining coverage;
   b. Misrepresentation of the amount of payroll for purposes of premium calculation;
   c. Failure to pay a premium when payment was due;
   d. An increase in the hazard for which you seek coverage that results from an action or omission and that would produce an increase in the rate, including an increase because of failure to comply with reasonable recommendations for loss control or to comply within a reasonable period with recommendations designed to reduce a hazard that is under your control;
   e. A determination by the Commissioner of Insurance that the continuation of the policy would place us in violation of the law, or would be hazardous to the interests of subscribers, creditors, or the general public.
4. If another insurance company notifies the Texas Department of Insurance—Division of Workers' Compensation that it is insuring you as an employer, such notice must be a cancelation of this policy effective when the other policy starts.

Add the following to the policy:

PART SEVEN—OUR DUTY TO YOU FOR CLAIM NOTIFICATION

A. **Claims Notification**

We are required to notify you of any claim that is filed against your policy. Thereafter we must notify you of any proposal to settle a claim or, on receipt of a written request from you, of any administrative or judicial proceeding relating to the resolution of a claim, including a benefit review conference conducted by the Texas Department of Insurance—Division of Workers' Compensation. You may, in writing, elect to waive this notification requirement.

We must, on the written request from you, provide you with a list of claims charged against your policy, payments made and reserves established on each claim, and a statement explaining the effect of claims on your premium rates. We must furnish the requested information to you in writing no later than the 30th day after the date we receive your request. The information is considered to be provided on the date the information is received by the United States Postal Service or is personally delivered.

COMPLAINT NOTICE:

© Copyright 2016 National Council on Compensation Insurance, Inc. All Rights Reserved.

THE DISPUTE RESOLUTION PROCESS

THIS DISPUTE RESOLUTION PROCESS DOES NOT APPLY TO WORKERS COMPENSATION CLAIMS.

Proceed as follows if you have a dispute about your policy related to:

- Rates,
- The application or interpretation of rules contained in the various National Council on Compensation Insurance, Inc. (NCCI) manuals (including, but not limited to, classification codes and experience rating),
- Rating programs,
- Endorsements, or
- Forms.

First, contact the carrier that issued the policy and attempt to resolve the dispute directly. If the dispute is not directly resolved with the carrier, then contact NCCI, to ask for assistance through the dispute resolution process described in NCCI's ***Basic Manual***. You may obtain dispute resolution services only after you have made a reasonable attempt to first resolve the dispute directly with the carrier and have paid undisputed premium that may be due to the carrier.

Send your request for assistance by mail to NCCI, Dispute Resolution Services, 901 Peninsula Corporate Circle, Boca Raton, FL 33487-1362; or by fax to 561-893-5043; or by email to regulatoryassurance @ ncci.com.

NCCI will first work with you and the carrier to try to resolve the dispute. If you are unable to resolve the dispute to your satisfaction with NCCI's help, then you may ask NCCI to refer the dispute to the Texas Appeals Board (Board). NCCI is the Administrator to the Texas Appeals Board, and a staff member from TDI, appointed by the Commissioner, serves as the chair of the Board.

Within 30 calendar days of the date that the Appeals Board issues a decision, the policyholder may appeal the decision to the Texas Department of Insurance. To appeal a decision of the Appeals Board, contact the Texas Department of Insurance, Office of the Chief Clerk, Mail Code 113-2A, P.O. Box 149104, Austin, TX 78714-9104; or by fax to 512-490-1064; or by email to chiefclerk@tdi.texas.gov.

THIS NOTICE OF THE DISPUTE RESOLUTION PROCESS IS FOR INFORMATION ONLY AND DOES NOT BECOME A PART, TERM, OR CONDITION OF THIS POLICY.

CLAIM COMPLAINT:

If there is a workers compensation claim complaint involving one of your employees, then contact the Texas Department of Insurance—Division of Workers' Compensation, System Monitoring and Oversight, 7551 Metro Center Drive, Suite 100, MS-8, Austin, TX 78742; or by fax to 512-490-1030; or by e-mail to DWC-ComplaintResolution@tdi.texas.gov.

THIS NOTICE IS FOR INFORMATION ONLY AND DOES NOT BECOME A PART, TERM, OR CONDITION OF THIS POLICY.

© Copyright 2016 National Council on Compensation Insurance, Inc. All Rights Reserved.

TEXAS WAIVER OF OUR RIGHT TO RECOVER FROM OTHERS ENDORSEMENT

This endorsement applies only to the insurance provided by the policy because Texas is shown in Item 3.A. of the Information Page

We have the right to recover our payments from anyone liable for an injury covered by this policy. We will not enforce our right against the person or organization named in the Schedule, but this waiver applies only with respect to bodily injury arising out of the operations described in the Schedule where you are required by a written contract to obtain this waiver from us.

This endorsement shall not operate directly or indirectly to benefit anyone not named in the Schedule.

The premium for this endorsement is shown in the Schedule.

Schedule

1. (☐) Specific Waiver
   Name of person or organization

   (☒) Blanket Waiver
   Any person or organization for whom the Named Insured has agreed by written contract to furnish this waiver.

2. Operations:
   IF ANY

3. Premium:
   The premium charge for this endorsement shall be 2 percent of the premium developed on payroll in connection with work performed for the above person(s) or organization(s) arising out of the operations described.

4. Advance Premium: INCL

© Copyright 2014 National Council on Compensation Insurance, Inc. All Rights Reserved.

TEXAS—AUDIT PREMIUM AND RETROSPECTIVE PREMIUM ENDORSEMENT

Section D of Part Five of the policy is replaced by the following provision:

PART FIVE—PREMIUM

D. **Premium Payments**

You will pay all premium when due. You will pay the premium even if part or all of a workers compensation law is not valid. The billing statement or invoice for audit additional premiums and/or retrospective additional premiums establishes the date that the premium is due.

Privacy Notice

We Take Important Steps to Protect the Personal Information We Collect About You

Dear Customer:

rev. October 2016

We care about your privacy. That is why we believe in your right to know what nonpublic personal information we collect about you and what we do with that information. This Privacy Notice describes the nonpublic personal information we collect about you and how we handle the information as it relates to individuals who either own or are covered by insurance we issue, or who use other financial products or services we provide.

Overview	UNDERSTANDING HOW WE USE YOUR PERSONAL INFORMATION
Why are you receiving this Notice?	Financial institutions, which include the Company, choose how they share your personal nonpublic information. Federal and state law gives consumers the right to limit some but not all sharing of that information. Federal law also requires us to tell you how we collect, share and safeguard your nonpublic personal information. You are receiving this Privacy Notice because our records show either that you are the owner of an insurance policy or you are (or are authorized to act on behalf of) a current insured, future beneficiary and/or claimant under a policy, product or services issued by the Company.
What types of Information do we collect?	The types of nonpublic personal information we collect and share depend on the product or service you have with us. For example, this information can include: • Information about you we receive from you on applications or other forms, such as your name, address, telephone number, date of birth, your social security number, employment information, information about your income, medical information; • Information about your transactions with the Company and its affiliates; • Information about your claims history; • Data from insurance support organizations, government agencies, insurance information sharing bureaus; • Property information and similar data about you or your property; and • Information we receive from a consumer reporting agency, such as a credit report. When your relationship with us ends, we may continue to share information about you as described in this Privacy Notice.
What do we do with the nonpublic personal information we collect?	WE SHARE YOUR NONPUBLIC PERSONAL INFORMATION IN THE COURSE OF SUPPORTING YOUR INSURANCE COVERAGE OR NON-INSURANCE PRODUCTS OR SERVICES, AS AUTHORIZED BY LAW, OR WITH YOUR CONSENT. THIS INCLUDES SHARING, AS PERMITTED BY LAW, YOUR NONPUBLIC PERSONAL INFORMATION WITH AFFILIATED PARTIES AND NONAFFILIATED THIRD PARTIES, AS APPLICABLE, IN THE COURSE OF SUPPORTING YOUR INSURANCE COVERAGE OR NON-INSURANCE PRODUCTS. IN THE SECTION BELOW, WE LIST THE REASONS WE CAN SHARE YOUR NONPUBLIC PERSONAL INFORMATION, WHETHER WE ACTUALLY SHARE YOUR NONPUBLIC PERSONAL INFORMATION, AND WHETHER YOU CAN OPT OUT OF THIS SHARING (OR IF YOU ARE A RESIDENT OF VERMONT, WHETHER YOU HAVE THE RIGHT TO OPT IN TO ALLOWING THIS SHARING).

©2016 Zurich American Insurance Company

Reasons we may share your personal information	Does Company Share?	Can you opt out of this sharing or limit this sharing or is your authorization required for this sharing? [For residents of Vermont: Do you have the right to opt in to allow this sharing?]
For our everyday business purposes – to affiliates and non-affiliates to process your transactions, administer insurance coverage, products or services, maintain your account and report to credit bureaus	Yes	No
For our marketing purposes or for joint marketing with other financial companies	No	We don't share
For our affiliates' everyday business purposes – transaction and experience information	Yes	No
For our affiliates' everyday business purposes – creditworthiness	No	No
For our affiliates to market to you	Yes	No
For non-affiliates to market to you	No	We don't share

Collecting and safeguarding information	
How often does the Company notify me about their practices?	We must notify you about our sharing practices when you receive your policy, open an account or purchase a service, and each year while you are a customer, or when significant or legal changes require a revision.
Why and how does the Company collect my nonpublic personal information?	We collect nonpublic personal information when you apply for insurance or file an insurance claim to help us provide you with our insurance products and services, and determine your insurability or other eligibility. We may also ask you and others for information to help us verify your identity in order to prevent money laundering and terrorism. We collect personal information from: • Applications, forms and telephone, web site or written contact with you. This information can include social security number, driver's license number and income. • Your transaction(s) with us, our affiliates and other non-affiliated third parties. Transactional information includes such things as your insurance coverage, premiums, claims and payment history. Non-affiliated third parties may include appraisers, investigators, insurance companies, etc. • Information from physicians, hospitals and other medical providers. We collect this information only in connection with the issuance of individual or group insurance policies on your life or health, and with the processing and adjustment of claims under that insurance. Information in a report prepared by an insurance support organization may be retained by that organization and provided to others.
What nonpublic personal information does the Company disclose?	We may provide to an affiliated or non-affiliated party the same nonpublic personal information listed above in the section entitled, "What information do we collect?".
How does the Company safeguard my nonpublic personal information?	Employees who have access to your nonpublic personal information are required to maintain and protect the confidentiality of that information. Access to your personal information may be needed to conduct business on your behalf or to service your insurance coverage. In addition, we maintain physical, electronic and procedural measures to protect your personal information in compliance with applicable laws and regulatory standards.

©2016 Zurich American Insurance Company

FOR RESIDENTS OF ARIZONA, CALIFORNIA, CONNECTICUT, GEORGIA, ILLINOIS, MAINE, MASSACHUSETTS, MINNESOTA, MONTANA, NEW JERSEY, NEVADA, NORTH CAROLINA, OHIO, OREGON, OR VIRGINIA:

You have the following individual rights under state law:

Except for certain documents related to claims and lawsuits, you have the right to access the recorded personal information that we have collected about you which we reasonably can locate and retrieve. To access your recorded personal information you must submit a written request reasonably describing the information you seek, and send your written request to: Privacy Office via mail (Zurich – Privacy Office, 1299 Zurich Way, Schaumburg, IL 60196) or via email at privacy.office@zurichna.com. If you would like a copy of your recorded personal information that we reasonably can locate and retrieve, we may charge you a reasonable fee to cover the costs incurred in providing you a copy of the recorded information. If you request medical records, we may elect to supply that information to you through your designated medical professional. We may also direct you to a consumer reporting agency to obtain certain consumer report information.

Generally, most of the recorded nonpublic personal information we collect about you and have in our possession is from policy applications or enrollment forms you submit to obtain our products and services, and is reflected in your statements and other documentation you receive from us. If you believe that the personal information we have about you in our records is incomplete or inaccurate, please let us know at once in writing, and we will investigate and correct any errors we find.

You also have the right to request the correction, amendment, or deletion of recorded personal information about you that we have in our possession. You must make your request in writing and send your written request to: Privacy Office via mail (Zurich – Privacy Office, 1299 Zurich Way, Schaumburg, IL 60196) or via email at privacy.office@zurichna.com.

FOR RESIDENTS OF MASSACHUSETTS ONLY: You may ask in writing for the specific reasons for an adverse underwriting decision. An adverse underwriting decision is where we decline your application for insurance, offer to insure you at a higher than standard rate or terminate your coverage.

Key words and phrases	TERMS YOU SHOULD KNOW

Definitions	
Everyday business purposes	The actions necessary for financial companies like the Company to conduct business and manage customer accounts, such as: • Processing transactions, mailing and auditing services • Administering insurance coverage, product, services or claims • Providing information to credit bureaus • Protecting against fraud • Responding to court/governmental orders or subpoenas and legal investigations • Responding to insurance regulatory authorities
Affiliates	Financial or nonfinancial companies related by common ownership or control. • *Company affiliates include insurance and non-insurance companies under common ownership with the Company and that provide insurance and non-insurance products or services.*
Non-affiliates	Financial or nonfinancial companies not related by common ownership or control. We do not rent or sell your nonpublic personal information. However, we may share your information with companies that we hire to perform business services for us, such as data processing, computer software maintenance and development, and transaction processing. When we disclose information to others to perform these services, they are required to take appropriate steps to protect this information and use it only for purposes of performing the business services. • *Company does not share information with non-affiliates to market to you.*
Joint marketing	A formal agreement between non-affiliated financial companies that together market financial products or services to you. • *Company does not jointly market.*

Changes to this Privacy Notice; contact us	We may change the policies, standards and procedures described in this Notice at any time to comply with applicable laws and/or to conform to our current business practices.

©2016 Zurich American Insurance Company

	We will notify you of material changes. If you have any questions about your contract with us, you should contact your agent. If you have questions specific to our Privacy Notice, contact our Privacy Office via mail (Zurich – Privacy Office, 1299 Zurich Way, Schaumburg, IL 60196) or via email at privacy.office@zurichna.com.

This Privacy Notice is sent on behalf of the following affiliated companies:

American Guarantee and Liability Insurance Company, American Zurich Insurance Company, Colonial American Casualty and Surety Company, Empire Fire & Marine Insurance Company, Empire Indemnity Insurance Company, The Fidelity and Deposit Company of Maryland, Steadfast Insurance Company, Universal Underwriters Insurance Company, Universal Underwriters of Texas Insurance Company, Zurich American Insurance Company, Zurich American Insurance Company of Illinois, The Zurich Services Corporation (hereinafter individually and collectively referred to as "Company").

©2016 Zurich American Insurance Company

LARGE DEDUCTIBLE ENDORSEMENT

Insurance for this coverage part provided by: ZURICH AMERICAN INSURANCE COMPANY

Named Insured: THE BOARD OF REGENTS OF THE

Policy Number: WC 0183286-01

Effective Date of Endorsement: 08-01-2018

Expiration Date: 08-01-2019

This deductible endorsement applies between you and us. It does not affect or alter the rights of the policy. You will reimburse us for the deductible amounts that we pay on your behalf. This endorsement will remain in effect on renewals of this policy unless specifically not made a part of such or replaced by a similar endorsement.

States Covered: TX

SCHEDULE

Coverage	Deductible Amount/Basis	
Workers Compensation Bodily Injury By Accident:	$	each accident
Workers Compensation Bodily Injury By Disease:	$	each claim
Employers Liability Bodily Injury By Accident:	$	each accident
Employers Liability Bodily Injury By Disease	$	each claim

Allocated Loss Adjustment Expense (ALAE) Select One:

Option 1. X ALAE is reimbursed and included in Deductible Amount

Option 2. ALAE is reimbursed in addition to Deductible Amount

Option 3 ALAE is not reimbursed

A. How This Deductible Applies

1. You agree to reimburse us for:

a. Each Accident/each Claim, up to the deductible amount shown in the Schedule above, for the total of:

(1) All benefits required of you by the Workers Compensation Law (including benefits payable under Other States Insurance or under any endorsement) and any Federal Act; plus

(2) All sums you must pay as damages under Employers Liability Insurance and any Federal Act; plus

b. All "allocated loss adjustment expense" as respects any "claim" or suit:

(1) As a part of the total of 1.above when you have elected Option 1, "ALAE is reimbursed and included in the deductible amount" in the Schedule above; or

(2) In addition to and not limited by the deductible amount when you have elected Option 2. "ALAE is reimbursed and in addition to the deductible amount", in the Schedule above..

c. All assessments we incur related to the deductible amount.

2. All claims for benefits or damages because of bodily injury by the same or related diseases to any one person will be considered as one claim when determining how the deductible amounts apply. Included are filings by your employee for such benefits with an agency authorized by law, and a suit or other proceeding brought by your employee for such benefits or damages. "By your employee"

includes such action taken by others legally entitled to do so on his or her behalf.

B. Effect of Deductible on Limits of Liability

1. With respect to the Employers Liability Insurance provided by this policy, the applicable, "each claim", "each accident", or other similar amount of reimbursement is reduced by the sum of all damages within applicable deductible amount shown.

   The payment of "allocated loss adjustment expense" will not affect the amount of reimbursement. This provision applies whether the Employers Liability Insurance is provided by Part Two or by an endorsement to this policy.

2. In the event of a claim, our obligation to pay is the amount available for benefits or damages that remains after the application of the specific loss reimbursement amount.

C. Definitions

1. "Claim" means a written demand you receive for:

   a. Benefits required of you by a Workers Compensation law; or

   b. Damages covered by this policy.

2. "Allocated loss adjustment expense" means claim adjustment expense directly allocated by us to a particular "claim". Such expense shall include, but shall not be limited to: attorney's fees; independent adjusters fees; court and alternative dispute resolution costs; medical examinations; expert medical or other testimony; autopsies; witnesses and summonses; copies of documents; arbitration fees; surveillance; appeal bond costs and appeal filing fees; pre and post judgement interest; and medical cost containment expenses. Such expenses shall not include cost of investigation, the salaries and traveling expenses of our employees, other than those salaried employees who preform services which can be directly allocated to the handling of a particular claim.

D. Conditions

1. **Subrogation**

   We have your rights and the rights of persons entitled to the benefits of this insurance to recover losses that are reimbursable under this endorsement and any deductible amount from anyone liable for the injury. You will do everything necessary to protect those rights for us and to help us enforce them.

   If we recover any payment made under this policy from anyone liable for the injury, the amount we recover will first be applied to any payments made by us on this injury in excess of the deductible amount; only then will the remainder of that recovery, if any, be applied to reduce the deductible amount paid or reimbursed or reimbursable by you on this injury.

2. **Cancellation**

   You must:

   a. Promptly pay us all amounts for which you are responsible under this endorsement; and

   b. Reimburse us for any such amounts that we pay upon receipt of a billing from us.

   If you fail to do so, we will cancel either this endorsement or this policy by provisions of statute.

   If this policy or endorsement is cancelled we will abide by the statutory provisions which govern this policy and return the premium less uncollected advances paid for losses within the deductible including "allocated loss adjustment expenses."

3. **Your Duties**

   a. The first Named Insured shown on the Information Page is authorized to pay all deductible amounts on behalf of all Named Insureds and to reimburse us for any such amounts that we advance.

   b. Each Named Insured is jointly and severally liable for all deductible amounts under this policy.

4. **Other Rights and Duties (Ours and Yours)**

   All other terms of this policy, including those which govern:

   a. Our right and duty to defend any "claim", proceeding or suit against you; and

   b. Your duties, if injury occurs;

   apply regardless of application of this deductible endorsement.

Workers Compensation and Employers Liability Insurance Policy

ZURICH

ZURICH AMERICAN INSURANCE COMPANY
A stock insurance company
A member company of Zurich North America

Administrative office:
Zurich Towers
1299 Zurich Way
Schaumburg, Illinois 60195-1056

Insured

THE BOARD OF REGENTS OF THE
(SEE NAMED INSURED ENDORSEMENT)
210 W 7TH ST
AUSTIN, TX 78701

Producer

MARSH USA INC
1717 MAIN ST STE 4400
COMERICA BANK TOWER
DALLAS TX 75201-7343

In return for the payment of premium, and subject to the terms of this policy, coverage is provided as stated in this policy.

IN WITNESS WHEREOF, this Company has executed and attested these presents and, where required by law, has caused this policy to be countersigned by its duly Authorized Representative(s).

Mark E. Kimpfer

President

Dennis F. Kenny Jr.

Secretary

ENDORSEMENT

Insurance for this coverage part provided by:
ZURICH AMERICAN INSURANCE COMPANY

This endorsement changes the insurance as is afforded by the policy relating to the following:

Named Insured	Policy Number
THE BOARD OF REGENTS OF THE	WC 0183286-01

CANCELLATION AND NON-RENEWAL NOTICE ENDT

PART SIX - CONDITIONS, PARAGRAPH D.2. IS REPLACED BY THE FOLLOWING:

D. CANCELLATION

2. WE MAY CANCEL THIS POLICY. WE MUST MAIL OR DELIVER TO YOU NOT LESS THAN (90) DAYS ADVANCE WRITTEN NOTICE STATING WHEN THE CANCELLATION IS TO TAKE EFFECT EXCEPT FOR CANCELLATION FOR NON-PAYMENT OF PREMIUM. IF WE CANCEL THIS POLICY FOR NON-PAYMENT OF PREMIUM WE MUST MAIL OR DELIVER TO YOU NOT LESS THAN (10) DAYS ADVANCE WRITTEN NOTICE. MAILING THAT NOTICE TO YOU AT YOUR MAILING ADDRESS SHOWN IN ITEM 1 OF THE INFORMATION PAGE WILL BE SUFFICIENT TO PROVE NOTICE.

PART SIX - CONDITIONS, PARAGRAPH F. IS ADDED:

F. NON-RENEWAL NOTICE

WE WILL MAIL OR DELIVER TO YOU NOT LESS THAN (90) DAYS ADVANCE WRITTEN NOTICE OF OUR INTENTION TO NON-RENEW THIS POLICY. MAILING THAT NOTICE TO YOU AT YOUR MAILING ADDRESS SHOWN IN ITEM 1 OF THE INFORMATION PAGE WILL BE SUFFICIENT TO PROVE NOTICE.

ENDORSEMENT

Insurance for this coverage part provided by:
ZURICH AMERICAN INSURANCE COMPANY

This endorsement changes the insurance as is afforded by the policy relating to the following:

Named Insured	Policy Number
THE BOARD OF REGENTS OF THE	WC 0183286-01

KNOWLEDGE OF INJURY

PART FOUR - YOUR DUTIES IF INJURY OCCURS IS REPLACED BY THE FOLLOWING:

PART FOUR
YOUR DUTIES IF INJURY OCCURS

TELL US AT ONCE IF INJURY OCCURS THAT MAY BE COVERED BY THIS POLICY. KNOWLEDGE OF AN INJURY BY AN AGENT, SERVANT OR EMPLOYEE OF AN INSURED SHALL NOT IN ITSELF CONSTITUTE YOUR KNOWLEDGE UNLESS YOUR OFFICER, MANAGER OR PARTNER HAS RECEIVED NOTICE OF THE INJURY. YOUR OTHER DUTIES ARE LISTED HERE:

1. PROVIDE FOR IMMEDIATE MEDICAL AND OTHER SERVICES REQUIRED BY THE WORKERS COMPENSATION LAW.
2. GIVE US OR OUR AGENT THE NAMES AND ADDRESSES OF THE INJURED PERSONS AND OF WITNESSES, AND OTHER INFORMATION WE MAY NEED.
3. PROMPTLY GIVE US ALL NOTICES, DEMANDS AND LEGAL PAPERS RELATING TO THE INJURY, CLAIM, PROCEEDING OR SUIT.
4. COOPERATE WITH US AND ASSIST US, AS WE MAY REQUEST, IN THE INVESTIGATION, SETTLEMENT OR DEFENSE OF ANY CLAIM, PROCEEDING OR SUIT.
5. DO NOTHING AFTER AN INJURY OCCURS THAT WOULD INTERFERE WITH OUR RIGHT TO RECOVER FROM OTHERS.
6. DO NOT VOLUNTARILY MAKE PAYMENTS, ASSUME OBLIGATIONS OR INCUR EXPENSES, EXCEPT AT YOUR OWN COST.

ENDORSEMENT

Insurance for this coverage part provided by:
ZURICH AMERICAN INSURANCE COMPANY

This endorsement changes the insurance as is afforded by the policy relating to the following:

Named Insured	Policy Number
THE BOARD OF REGENTS OF THE	WC 0183286-01

SOLE AGENT FOR INSUREDS

IT IS AGREED THAT THIS POLICY IS ISSUED AT THE DIRECTION OF THE BOARD OF REGENTS OF THE UNIVERSITY OF TEXAS SYSTEM, WHICH SHALL BE SOLELY RESPONSIBLE FOR THE PAYMENT OF PREMIUMS AND LOSSES UNDER THE DEDUCTIBLE AMOUNT AS OUTLINED IN THE POLICY AND SHALL HAVE OTHER POLICY RIGHTS TO ACT ON BEHALF OF INSUREDS. THE INSUREDS HAVE ASSIGNED TO THE FIRST NAMED INSURED:

1. THE RIGHTS, TITLE, AND INTEREST TO RECEIVE ANY AND ALL RETURN OF PREMIUM, DIVIDENDS, DISCOUNTS OR OTHER ADJUSTMENTS; AND
2. THE RIGHT TO REQUEST CANCELLATION OF THE POLICY; AND
3. AUTHORIZATION TO ACT ON THEIR BEHALF AS RESPECTS CHANGES TO ANY PROVISIONS OF THIS INSURANCE POLICY.

WE CONSENT TO SUCH ASSIGNMENT OF RIGHTS, TITLE AND INTEREST.

OTHER TERMS

ALL OTHER TERMS AND CONDITIONS OF THE POLICY NOT CHANGED BY THE PROVISIONS OF THIS ENDORSEMENT CONTINUE TO APPLY AS CURRENTLY WRITTEN.

ENDORSEMENT

Insurance for this coverage part provided by:
ZURICH AMERICAN INSURANCE COMPANY

This endorsement changes the insurance as is afforded by the policy relating to the following:

Named Insured	Policy Number
THE BOARD OF REGENTS OF THE	WC 0183286-01

NOTICE OF OCCURRENCE

IF YOU REPORT AN INJURY TO ANOTHER INSURER AND LATER DISCOVER THAT YOU SHOULD HAVE REPORTED THE INJURY TO US, WE WILL NOT CONSIDER YOUR FAILURE TO REPORT THE INJURY EARLIER A VIOLATION OF YOUR DUTIES IF INJURY OCCURS AS LONG AS YOU GIVE US NOTICE AS SOON AS YOU ARE AWARE THAT THE INJURY SHOULD HAVE BEEN REPORTED TO US.

ENDORSEMENT

Insurance for this coverage part provided by:
ZURICH AMERICAN INSURANCE COMPANY

This endorsement changes the insurance as is afforded by the policy relating to the following:

Named Insured	Policy Number
THE BOARD OF REGENTS OF THE	WC 0183286-01

UNINTENTIONAL ERROR OR OMISSIONS ENDT

ANY UNINTENTIONAL ERROR OR OMISSION IN THE DESCRIPTION OF, OR FAILURE TO COMPLETELY DESCRIBE, ANY HAZARDS, PREMISES OR OPERATIONS INTENDED TO BE COVERED BY THIS POLICY, SHALL NOT INVALIDATE THE COVERAGE AFFORDED BY THIS POLICY.

YOU MUST NOTIFY US AS SOON AS POSSIBLE AFTER THE DISCOVERY OF ANY HAZARDS OR ANY OTHER INFORMATION THAT WAS NOT PROVIDED TO US PRIOR TO THE ACCEPTANCE OF THE POLICY.

THIS PROVISION DOES NOT AFFECT OUR RIGHT TO CHARGE ADDITIONAL PREMIUM FOR ADDITIONAL EXPOSURE OR CANCEL OR NON-RENEW THE POLICY.

ZURICH

Combined Aggregate Deductible Schedule

Policy No.	Eff. Date of Pol.	Exp. Date of Pol.
WC 0183286-01	08-01-2018	08-01-2019

THIS ENDORSEMENT CHANGES THE POLICY. PLEASE READ IT CAREFULLY.

This endorsement provides supplementary information to be used with the following:

Business Auto Coverage Form
Commercial General Liability Coverage Part
Employee Benefits Liability Coverage Part
Garage Coverage Form
Liquor Liability Coverage Part
Motor Carrier Coverage Form
Stop Gap – Employers Liability Coverage Part
Truckers Coverage Form
Workers Compensation and Employers Liability Policy

The Combined Aggregate Deductible is adjustable and determined as the sum of the rate(s) multiplied by the final audited Exposure(s).	Estimated Exposure	Rate	Per	Of (Exposure Basis)
				CONSTRUCTION VALUE

The Deductible Amounts for the policies listed here will be combined with this policy for the application of the Combined Aggregate Deductible Amount.

Policy Number(s):

GLO0183287-00			

Combined Aggregate Deductible Amount	$
Minimum Combined Aggregate Deductible Amount	$

ZURICH

Texas Important Notice

IMPORTANT NOTICE

To obtain information or make a complaint:

You may call Zurich North America's toll-free telephone number for information or to make a complaint at:

1-800-382-2150

You may contact the Texas Department of Insurance to obtain information on companies, coverages, rights, or complaints at:

1-800-252-3439

You may write the Texas Department of Insurance:
P.O. Box 149104
Austin, TX 78714-9104
Fax: (512) 490-1007
Web: www.tdi.texas.gov
E-mail: ConsumerProtection@tdi.texas.gov

PREMIUM OR CLAIM DISPUTES:

Should you have a dispute concerning your premium or about a claim, you should contact the company first. If the dispute is not resolved, you may contact the Texas Department of Insurance.

ATTACH THIS NOTICE TO YOUR POLICY:

This notice is for information only and does not become a part or condition of the attached document.

AVISO IMPORTANTE

Para obtener información o para presentar una queja:

Usted puede llamar al número de teléfono gratuito de Zurich North America's para obtener información o para presentar una queja al:

1-800-382-2150

Usted puede comunicarse con el Departamento de Seguros de Texas para obtener información sobre compañías, coberturas, derechos, o quejas al:

1-800-252-3439

Usted puede escribir al Departamento de Seguros de Texas a:
P.O. Box 149104
Austin, TX 78714-9104
Fax: (512) 490-1007
Sitio web: www.tdi.texas.gov
E-mail: ConsumerProtection@tdi.texas.gov

DISPUTAS POR PRIMAS DE SEGUROS O RECLAMACIONES:

Si tiene una disputa relacionada con su prima de seguro o con una reclamación, usted debe comunicarse con la compañía primero. Si la disputa no es resuelta, usted puede comunicarse con el Departamento de Seguros de Texas.

ADJUNTE ESTE AVISO A SU PÓLIZA: Este aviso es solamente para propósitos informativos y no se convierte en parte o en condición del documento adjunto.

Sanctions Advisory Notice to Policyholders

ZURICH

No coverage is provided by this policyholder notice nor can it be construed to replace any provisions of your policy. You should read your policy and review your declarations page for complete information on the coverages you are provided.

This notice provides information concerning possible impact on your insurance coverage due to global sanctions, which may include any of the following:

- Foreign agents;
- Front organizations;
- Terrorists;
- Terrorist organizations; and
- Narcotics traffickers.

Please read this Notice carefully.

We shall not provide coverage, make any payments or provide any service or benefit to any insured, beneficiary, or third party who may have any rights under this policy to the extent any business or activity of the insured would violate any applicable trade or economic sanctions law or regulation.

ALL OTHER TERMS AND CONDITIONS OF THE POLICY REMAIN UNCHANGED

SANCTIONS EXCLUSION ENDORSEMENT

THIS ENDORSEMENT CHANGES THE POLICY. PLEASE READ IT CAREFULLY

The following exclusion is added to the policy to which it is attached and supersedes any existing sanctions language in the policy, whether included in an Exclusion Section or otherwise:

SANCTIONS EXCLUSION

Notwithstanding any other terms under this policy, we shall not provide coverage nor will we make any payments or provide any service or benefit to any insured, beneficiary, or third party who may have any rights under this policy to the extent that such cover, payment, service, benefit, or any business or activity of the insured would violate any applicable trade or economic sanctions law or regulation.

The term policy may be comprised of common policy terms and conditions, the declarations, notices, schedule, coverage parts, insuring agreement, application, enrollment form, and endorsements or riders, if any, for each coverage provided. Policy may also be referred to as contract or agreement.

We may be referred to as insurer, underwriter, we, us, and our, or as otherwise defined in the policy, and shall mean the company providing the coverage.

Insured may be referred to as policyholder, named insured, covered person, additional insured or claimant, or as otherwise defined in the policy, and shall mean the party, person or entity having defined rights under the policy.

These definitions may be found in various parts of the policy and any applicable riders or endorsements.

ALL OTHER TERMS AND CONDITIONS OF THIS POLICY REMAIN UNCHANGED

Insured Name: THE BOARD OF REGENTS OF THE UN
Policy Number: GLO 0183287-00
Effective Date: 08/01/2017

THIS DISCLOSURE IS ATTACHED TO AND MADE PART OF YOUR POLICY.

DISCLOSURE OF IMPORTANT INFORMATION RELATING TO TERRORISM RISK INSURANCE ACT

SCHEDULE*

Premium attributable to risk of loss from certified acts of terrorism for lines of insurance subject to TRIA:
General Liability

*Any information required to complete this Schedule, if not shown above, will be shown in the Declarations.

A. Disclosure of Premium

In accordance with the federal Terrorism Risk Insurance Act ("TRIA"), as amended, we are required to provide you with a notice disclosing the portion of your premium, if any, attributable to the risk of loss from terrorist acts certified under that Act for lines subject to TRIA. That portion of premium attributable is shown in the Schedule above. The premium shown in the Schedule above is subject to adjustment upon premium audit, if applicable.

B. Disclosure of Federal Participation in Payment of Terrorism Losses

The United States Government may pay a share of insured losses resulting from an act of terrorism. The federal share will decrease by 5% from 85% to 80% over a five year period while the insurer share increases by the same amount during the same period. The schedule below illustrates the decrease in the federal share:

January1, 2015 – December 31, 2015 federal share: 85%

January1, 2016 – December 31, 2016 federal share: 84%

January1, 2017 – December 31, 2017 federal share: 83%

January1, 2018 – December 31, 2018 federal share: 82%

January1, 2019 – December 31, 2019 federal share: 81%

January1, 2020 – December 31, 2020 federal share: 80%

C. Disclosure of $100 Billion Cap on All Insurer and Federal Obligations

If aggregate insured losses attributable to terrorist acts certified under TRIA exceed $100 billion in a calendar year (January 1 through December 31) and an insurer has met its deductible under the program, that insurer shall not be liable for the payment of any portion of the amount of such losses that exceeds $100 billion, and in such case insured losses up to that amount are subject to pro rata allocation in accordance with procedures established by the Secretary of Treasury.

D. Availability

As required by TRIA, we have made available to you for lines subject to TRIA coverage for losses resulting from acts of terrorism certified under TRIA with terms, amounts and limitations that do not differ materially from those for losses arising from events other than acts of terrorism.

Copyright © 2015 Zurich American Insurance Company
Includes copyrighted material of Insurance Services Office, Inc., with its permission.

E. Definition of Act of Terrorism under TRIA

TRIA defines "act of terrorism" as any act that is certified by the Secretary of the Treasury, in accordance with the provisions of the federal Terrorism Risk Insurance Act ("TRIA"), to be an act of terrorism. The Terrorism Risk Insurance Act provides that the Secretary of Treasury shall certify an act of terrorism:

1. To be an act of terrorism;
2. To be a violent act or an act that is dangerous to human life, property or infrastructure;
3. To have resulted in damage within the United States, or outside of the United States in the case of an air carrier (as defined in section 40102 of Title 49, United States Code) or a United States flag vessel (or a vessel based principally in the United States, on which United States income tax is paid and whose insurance coverage is subject to regulation in the United States), or the premises of a United States mission; and
4. To have been committed by an individual or individuals as part of an effort to coerce the civilian population of the United States or to influence the policy or affect the conduct of the United States Government by coercion.

No act may be certified as an act of terrorism if the act is committed as part of the course of a war declared by Congress (except for workers' compensation) or if losses resulting from the act, in the aggregate for insurance subject to TRIA, do not exceed $5,000,000.

Copyright © 2015 Zurich American Insurance Company
Includes copyrighted material of Insurance Services Office, Inc., with its permission.

ZURICH

CAP ON LOSSES FROM CERTIFIED ACTS OF TERRORISM

Insureds Name	Policy Number	Effective Date	Endorsement Number
THE BOARD OF REGENTS OF THE UN	GLO 0183287-00	08/01/2017	

THIS ENDORSEMENT CHANGES YOUR POLICY. PLEASE READ IT CAREFULLY.

This endorsement modifies your insurance:

A. Cap on Losses From Certified Terrorism Losses

"Certified act of terrorism" means an act that is certified by the Secretary of the Treasury, in accordance with provisions of the federal Terrorism Risk Insurance Act ("TRIA"), to be an act of terrorism. The Terrorism Risk Insurance Act provides that the Secretary of Treasury shall certify an act of terrorism:

1. To be an act of terrorism;
2. To be a violent act or an act that is dangerous to human life, property or infrastructure;
3. To have resulted in damage within the United States, or outside of the United States in the case of an air carrier (as defined in section 40102 of Title 49, United States Code) or a United States flag vessel (or a vessel based principally in the United States, on which United States income tax is paid and whose insurance coverage is subject to regulation in the United States), or the premises of a United States mission; and
4. To have been committed by an individual or individuals as part of an effort to coerce the civilian population of the United States or to influence the policy or affect the conduct of the United States Government by coercion.

No act may be certified as an act of terrorism if the act is committed as part of the course of a war declared by Congress (except for workers' compensation) or if losses resulting from the act, in the aggregate for insurance subject to TRIA, do not exceed $5,000,000.

If aggregate insured losses attributable to one or more "certified acts of terrorism" exceed $100 billion in a calendar year (January 1 through December 31) and we have met our insurer deductible under the Terrorism Risk Insurance Act, we shall not be liable for the payment of any portion of the amount of such losses that exceeds $100 billion, and in such case insured losses up to that amount are subject to pro rata allocation in accordance with procedures established by the Secretary of Treasury.

B. Application of Other Exclusions

The terms and limitations of a terrorism exclusion or any other exclusion, or the inapplicability or omission of a terrorism exclusion or any other exclusion, do not serve to create coverage which would otherwise be excluded, limited or restricted under this policy.

Copyright © 2015 Zurich American Insurance Company
Includes copyrighted material of Insurance Services Office, Inc., with its permission.

Disclosure Statement

ZURICH

It is our pleasure to present the enclosed policy to you
for presentation to your customer.

INSTRUCTION TO AGENT OR BROKER:

WE REQUIRE THAT YOU TRANSMIT THE ATTACHED/ENCLOSED DISCLOSURE STATEMENT TO THE CUSTOMER WITH THE POLICY.

Once again, thank you for your interest, and we look forward to meeting your needs and those of your customers.

Disclosure Statement

NOTICE OF DISCLOSURE FOR AGENT & BROKER COMPENSATION

If you want to learn more about the compensation Zurich pays agents and brokers visit:

http://www.zurichnaproducercompensation.com

or call the following toll-free number: (866) 903-1192.

This Notice is provided on behalf of Zurich American Insurance Company

and its underwriting subsidiaries.

ZURICH

COMMERCIAL INSURANCE

COMMON POLICY DECLARATIONS

Policy Number GLO 0183287-00

Renewal of Number NEW

Named Insured and Mailing Address
THE BOARD OF REGENTS OF THE
UNIVERSITY OF TEXAS SYSTEM
210 W 7TH ST
AUSTIN TX 78701

Producer and Mailing Address
MARSH USA INC
1717 MAIN ST STE 4400
COMERICA BANK TOWER
DALLAS TX 75201-7343

Producer Code 36140-000

Policy Period: Coverage begins 08-01-2017 at 12:01 A.M.; Coverage ends 08-01-2023 at 12:01 A.M.

The name insured is ☐ Individual ☐ Partnership ☒ Corporation
☐ Other:

This insurance is provided by one or more of the stock insurance companies which are members of the Zurich-American Insurance Group. The company tha provides coverage is designated on each Coverage Part Common Declarations. The company or companies providing this insurance may be referred to in this policy as "The Company", we, us, or our. The address of the companies of the Zurich-American Insurance Group are provided on the next page.

THIS POLICY CONSISTS OF THE FOLLOWING COVERAGE(S):

GENERAL LIABILITY COVERAGE PREMIUM $
issued by ZURICH AMERICAN INSURANCE COMPANY

THIS PREMIUM MAY BE SUBJECT TO AUDIT. **TOTAL** **$**
This premium does not include Taxes and Surcharges.
SEE INSTALLMENT SCHEDULE

Taxes and Surcharges **TOTAL** **$**

The Form(s) and Endorsement(s) made a part of this policy at the time of issue are listed on the **SCHEDULE of FORMS and ENDORSEMENTS.**

Countersigned this day of

Authorized Representative

THESE DECLARATIONS TOGETHER WITH THE COMMON POLICY CONDITIONS, COVERAGE PART DECLARATIONS, COVERAGE PART FORM(S), FORMS AND ENDORSEMENTS, IF ANY, ISSUED TO FORM A PART THEREOF, COMPLETE THE ABOVE NUMBERED POLICY.

Policy Number
GLO 0183287-00

SCHEDULE OF FORMS AND ENDORSEMENTS

Zurich American Insurance Company

Named Insured THE BOARD OF REGENTS OF THE

Effective Date: 08-01-17
12:01 A.M., Standard Time

Agent Name MARSH USA INC

Agent No. 36140-000

COMMON POLICY FORMS AND ENDORSEMENTS

U-GU-1191-A CW	03-15	SANCTIONS EXCLUSION ENDORSEMENT
U-GU-630-D CW	01-15	DISCLOSURE OF INFO RELATING TO TRIA
U-GU-767-B CW	01-15	CAP ON LOSS FROM CERTIFIED ACTS OF TERR
U-GU-D-310-A	01-93	COMMON POLICY DECLARATIONS
U-GU-619-A CW	10-02	SCHEDULE OF FORMS AND ENDORSEMENTS
U-GU-319-F	01-09	IMPORTANT NOTICE - IN WITNESS CLAUSE
U-GU-406-B	07-15	INSTALLMENT PREMIUM SCHEDULE
U-GU-1016-A CW	06-10	KNOWLEDGE BY POSITION OR DEPARTMENT
IL 00 17	11-98	COMMON POLICY CONDITIONS
IL 00 21	09-08	NUCLEAR ENERGY LIABILITY EXCLUSION ENDT
IL 01 68	03-12	TEXAS CHANGES-DUTIES
IL 02 75	11-13	TEXAS CHANGES-CANC & NONRENL
IL 00 03	09-08	CALCULATION OF PREMIUM
U-GU-D-639-A CW	07-07	COMBINED AGGREGATE DEDUCTIBLE SCHEDULE

GENERAL LIABILITY FORMS AND ENDORSEMENTS

U-GL-1517-B CW	04-13	RECORD OR DISTRB OF MATRL OR INFO EXCL
U-GL-1520-A CW	08-12	PREM & RPTS AGRMNT- COMP RTD-CNST-WRAPUP
U-GL-1522-A CW	03-13	PRIMARY & NONCONTRIB DESIG PROJ WRAP-UP
U-GL-922-B CW	12-01	NOTICE OF ERROR IN CLAIM REPORTING ENDT
U-GL-923-B CW	06-04	SILICA OR SILICA MIXED DUST EXCLUSION
U-GL-D-1115-B CW	09-04	COMMERCIAL GL COVERAGE PART DECLARATIONS
U-GL-1364-A CW	09-08	FELLOW EMPL CVG-DESGNTD EMPLYS/POSITIONS
U-GL-D-1306-B CW	01-13	DESIGNATED PROJECT-DECLARATIONS
CG 00 01	04-13	COMMERCIAL GENERAL LIABILITY COV FORM
U-GL-1114-A CW	10-02	NAMED INSURED - OCIP
U-GL-1114-A CW	10-02	EXTENDED ONGOING OPERATIONS COVERAGE
U-GL-1114-A CW	10-02	NOTICE OF OCCURRENCE
U-GL-1114-A CW	10-02	EXTENDED COMPLETED OPERATIONS
U-GL-1114-A CW	10-02	SUDDEN & ACCIDENTAL POLLUTION
U-GL-1054-A CW	12-01	UNINTENTIONAL FAILURE TO DISCLOSE HAZARD
UGL1171ACW	07-03	FUNGI OR BACTERIA EXCLUSION
U-GL-1175-F CW	04-13	ADDL INSD-AUTO-OWNERS LESSEES CONTRACTR
U-GL-1180ACW	09-03	LIMITED CONTRACTUAL LIABILITY
U-GL-1265-B CW	07-15	EXCL-EXTERIOR INSULATION & FINISH SYSTEM
U-GL-1298-C CW	08-08	EARLIER NOTICE OF CANCEL OR NON-RENEWAL
U-GL-1336-B CW	10-07	COMBINED AGGREGATE DEDUCTIBLE
U-GL-1342-A CW	10-07	LEAD LIABILITY EXCLUSION
U-GL-1178ACW	07-03	ASBESTOS EXCLUSION ENDORSEMENT
U-GL-1299-A CW	02-07	SOLE AGENT FOR INSUREDS
U-GL-1300-A CW	01-07	JOINT DEFENSE - WRAP-UP
U-GL-1301-B CW	04-11	DAMAGE TO THE PROJECT EXCLUSION
U-GL-1305-A CW	02-07	LIMITATION OF COV TO DESIGNATED PROJECTS
U-GL-1310-A CW	02-07	DESIGNATED PROJECTS-GENERAL AGGRGATE LMT
U-GL-1313-A CW	02-07	AMENDMNT OF LIMITS-PRODUCT-COMPLETED OPS
CG 01 03	06-06	TX CHANGES-CONDITIONS REQUIRING NOTICE
CG 04 37	05-14	ELECTRONIC DATA LIABILITY ENDORSEMENT
CG 21 65	12-04	TOTAL POLLUTION EXCL-WITH EXCEPTIONS
CG 22 79	04-13	EXCL-CONTRACTORS-PROF LIAB
CG 24 04	05-09	WAIVER OF TRANSFER RIGHTS OF RECOVERY
CG 24 17	10-01	CONTRACTUAL LIABILITY - RAILROADS
CG 26 39	12-07	TX CHANGES-EMPLOY RELATED PRACTICES EXCL

Important Notice – In Witness Clause

ZURICH

In return for the payment of premium, and subject to the terms of this policy, coverage is provided as stated in this policy.

IN WITNESS WHEREOF, this Company has executed and attested these presents and, where required by law, has caused this policy to be countersigned by its duly Authorized Representative(s).

President

Corporate Secretary

QUESTIONS ABOUT YOUR INSURANCE? Your agent or broker is best equipped to provide information about your insurance. Should you require additional information or assistance in resolving a complaint, call or write to the following (please have your policy or claim number ready):

Zurich in North America
Customer Inquiry Center
1299 Zurich Way
Schaumburg, Illinois 60196-1056
1-800-382-2150 (Business Hours: 8am - 4pm [CT])
Email: info.source@zurichna.com

ZURICH

INSTALLMENT PREMIUM SCHEDULE

The total premium shown in the Declarations of this policy is made payable in installments, on the dates and in the amounts shown below.

NAMED INSURED	POLICY NUMBER	ENDORSEMENT NUMBER
THE BOARD OF REGENTS OF THE	GLO 0183287-00	

Typed: **SPECIAL BILL**

PAYMENT DUE	STANDARD PREMIUM	TOTAL PREMIUM
09/11/17	$	$
TOTAL	$	$

Failure to pay the installment Premium by the Due Date shown shall constitute non-payment of premium for which we may cancel this policy.

Knowledge by Position or Department

ZURICH

Policy No.	Eff. Date of Pol.	Exp. Date of Pol.	Eff. Date of End.	Producer No.	Add'l. Prem	Return Prem.
GLO 0183287-00	08/01/2017	08/01/2023		36140000	**INCL**	

THIS ENDORSEMENT CHANGES THE POLICY. PLEASE READ IT CAREFULLY.

This endorsement modifies insurance provided under the:

Business Auto Coverage Part
Commercial General Liability Coverage Part
Liquor Liability Coverage Part
Products/Completed Operations Liability Coverage Part
Railroad Protective Liability Coverage Part

SCHEDULE

Position or Department:	PROJECT MGR/RISK MGR, OR SAFETY DIRECTOR

The following Condition is added:

Knowledge By Your Employee

1. Knowledge of an "accident", "occurrence", offense, "injury", claim, "suit" or loss by your employee will not in and of itself be considered your knowledge of the "accident", "occurrence", offense, "injury", claim, "suit" or loss unless an employee who:
   a. Holds a position; or
   b. Is a member of a department;

   shown in the Schedule of this endorsement receives such knowledge.
2. This endorsement does not apply unless the Schedule of this endorsement indicates at least one Position or Department.

All other terms and conditions of this policy remain unchanged.

Includes copyrighted material of Insurance Services Office, Inc., with its permission.

COMMON POLICY CONDITIONS

All Coverage Parts included in this policy are subject to the following conditions.

A. Cancellation

1. The first Named Insured shown in the Declarations may cancel this policy by mailing or delivering to us advance written notice of cancellation.
2. We may cancel this policy by mailing or delivering to the first Named Insured written notice of cancellation at least:
   a. 10 days before the effective date of cancellation if we cancel for nonpayment of premium; or
   b. 30 days before the effective date of cancellation if we cancel for any other reason.
3. We will mail or deliver our notice to the first Named Insured's last mailing address known to us.
4. Notice of cancellation will state the effective date of cancellation. The policy period will end on that date.
5. If this policy is cancelled, we will send the first Named Insured any premium refund due. If we cancel, the refund will be pro rata. If the first Named Insured cancels, the refund may be less than pro rata. The cancellation will be effective even if we have not made or offered a refund.
6. If notice is mailed, proof of mailing will be sufficient proof of notice.

B. Changes

This policy contains all the agreements between you and us concerning the insurance afforded. The first Named Insured shown in the Declarations is authorized to make changes in the terms of this policy with our consent. This policy's terms can be amended or waived only by endorsement issued by us and made a part of this policy.

C. Examination Of Your Books And Records

We may examine and audit your books and records as they relate to this policy at any time during the policy period and up to three years afterward.

D. Inspections And Surveys

1. We have the right to:
   a. Make inspections and surveys at any time;
   b. Give you reports on the conditions we find; and
   c. Recommend changes.
2. We are not obligated to make any inspections, surveys, reports or recommendations and any such actions we do undertake relate only to insurability and the premiums to be charged. We do not make safety inspections. We do not undertake to perform the duty of any person or organization to provide for the health or safety of workers or the public. And we do not warrant that conditions:
   a. Are safe or healthful; or
   b. Comply with laws, regulations, codes or standards.
3. Paragraphs **1.** and **2.** of this condition apply not only to us, but also to any rating, advisory, rate service or similar organization which makes insurance inspections, surveys, reports or recommendations.
4. Paragraph **2.** of this condition does not apply to any inspections, surveys, reports or recommendations we may make relative to certification, under state or municipal statutes, ordinances or regulations, of boilers, pressure vessels or elevators.

E. Premiums

The first Named Insured shown in the Declarations:

1. Is responsible for the payment of all premiums; and
2. Will be the payee for any return premiums we pay.

F. Transfer Of Your Rights And Duties Under This Policy

Your rights and duties under this policy may not be transferred without our written consent except in the case of death of an individual named insured.

If you die, your rights and duties will be transferred to your legal representative but only while acting within the scope of duties as your legal representative. Until your legal representative is appointed, anyone having proper temporary custody of your property will have your rights and duties but only with respect to that property.

Copyright, Insurance Services Office, Inc., 1998

IL 00 21 09 08

THIS ENDORSEMENT CHANGES THE POLICY. PLEASE READ IT CAREFULLY.

NUCLEAR ENERGY LIABILITY EXCLUSION ENDORSEMENT

(Broad Form)

This endorsement modifies insurance provided under the following:

COMMERCIAL AUTOMOBILE COVERAGE PART
COMMERCIAL GENERAL LIABILITY COVERAGE PART
FARM COVERAGE PART
LIQUOR LIABILITY COVERAGE PART
MEDICAL PROFESSIONAL LIABILITY COVERAGE PART
OWNERS AND CONTRACTORS PROTECTIVE LIABILITY COVERAGE PART
POLLUTION LIABILITY COVERAGE PART
PRODUCTS/COMPLETED OPERATIONS LIABILITY COVERAGE PART
RAILROAD PROTECTIVE LIABILITY COVERAGE PART
UNDERGROUND STORAGE TANK POLICY

1. The insurance does not apply:

A. Under any Liability Coverage, to "bodily injury" or "property damage":

(1) With respect to which an "insured" under the policy is also an insured under a nuclear energy liability policy issued by Nuclear Energy Liability Insurance Association, Mutual Atomic Energy Liability Underwriters, Nuclear Insurance Association of Canada or any of their successors, or would be an insured under any such policy but for its termination upon exhaustion of its limit of liability; or

(2) Resulting from the "hazardous properties" of "nuclear material" and with respect to which **(a)** any person or organization is required to maintain financial protection pursuant to the Atomic Energy Act of 1954, or any law amendatory thereof, or **(b)** the "insured" is, or had this policy not been issued would be, entitled to indemnity from the United States of America, or any agency thereof, under any agreement entered into by the United States of America, or any agency thereof, with any person or organization.

B. Under any Medical Payments coverage, to expenses incurred with respect to "bodily injury" resulting from the "hazardous properties" of "nuclear material" and arising out of the operation of a "nuclear facility" by any person or organization.

C. Under any Liability Coverage, to "bodily injury" or "property damage" resulting from "hazardous properties" of "nuclear material", if:

(1) The "nuclear material" **(a)** is at any "nuclear facility" owned by, or operated by or on behalf of, an "insured" or **(b)** has been discharged or dispersed therefrom;

(2) The "nuclear material" is contained in "spent fuel" or "waste" at any time possessed, handled, used, processed, stored, transported or disposed of, by or on behalf of an "insured"; or

(3) The "bodily injury" or "property damage" arises out of the furnishing by an "insured" of services, materials, parts or equipment in connection with the planning, construction, maintenance, operation or use of any "nuclear facility", but if such facility is located within the United States of America, its territories or possessions or Canada, this exclusion **(3)** applies only to "property damage" to such "nuclear facility" and any property thereat.

2. As used in this endorsement:

"Hazardous properties" includes radioactive, toxic or explosive properties.

"Nuclear material" means "source material", "special nuclear material" or "by-product material".

© ISO Properties, Inc., 2007

"Source material", "special nuclear material", and "by-product material" have the meanings given them in the Atomic Energy Act of 1954 or in any law amendatory thereof.

"Spent fuel" means any fuel element or fuel component, solid or liquid, which has been used or exposed to radiation in a "nuclear reactor".

"Waste" means any waste material **(a)** containing "by-product material" other than the tailings or wastes produced by the extraction or concentration of uranium or thorium from any ore processed primarily for its "source material" content, and **(b)** resulting from the operation by any person or organization of any "nuclear facility" included under the first two paragraphs of the definition of "nuclear facility".

"Nuclear facility" means:

(a) Any "nuclear reactor";

(b) Any equipment or device designed or used for **(1)** separating the isotopes of uranium or plutonium, **(2)** processing or utilizing "spent fuel", or **(3)** handling, processing or packaging "waste";

(c) Any equipment or device used for the processing, fabricating or alloying of "special nuclear material" if at any time the total amount of such material in the custody of the "insured" at the premises where such equipment or device is located consists of or contains more than 25 grams of plutonium or uranium 233 or any combination thereof, or more than 250 grams of uranium 235;

(d) Any structure, basin, excavation, premises or place prepared or used for the storage or disposal of "waste";

and includes the site on which any of the foregoing is located, all operations conducted on such site and all premises used for such operations.

"Nuclear reactor" means any apparatus designed or used to sustain nuclear fission in a self-supporting chain reaction or to contain a critical mass of fissionable material.

"Property damage" includes all forms of radioactive contamination of property.

© ISO Properties, Inc., 2007

IL 01 68 03 12

THIS ENDORSEMENT CHANGES THE POLICY. PLEASE READ IT CAREFULLY.

TEXAS CHANGES – DUTIES

This endorsement modifies insurance provided under the following:

COMMERCIAL GENERAL LIABILITY COVERAGE PART
FARM COVERAGE PART
LIQUOR LIABILITY COVERAGE PART
MEDICAL PROFESSIONAL LIABILITY COVERAGE PART
OWNERS AND CONTRACTORS PROTECTIVE LIABILITY COVERAGE PART
POLLUTION LIABILITY COVERAGE PART
PRODUCTS/COMPLETED OPERATIONS LIABILITY COVERAGE PART
RAILROAD PROTECTIVE LIABILITY COVERAGE PART

The following is added to the **Duties** Condition:

We will notify the first Named Insured in writing of:

1. An initial offer to settle a claim made or "suit" brought against any insured ("insured") under this coverage. The notice will be given not later than the 10th day after the date on which the offer is made.
2. Any settlement of a claim made or "suit" brought against the insured ("insured") under this coverage. The notice will be given not later than the 30th day after the date of the settlement.

© Insurance Services Office, Inc., 2011

IL 02 75 11 13

THIS ENDORSEMENT CHANGES THE POLICY. PLEASE READ IT CAREFULLY.

TEXAS CHANGES – CANCELLATION AND NONRENEWAL PROVISIONS FOR CASUALTY LINES AND COMMERCIAL PACKAGE POLICIES

This endorsement modifies insurance provided under the following:

COMMERCIAL GENERAL LIABILITY COVERAGE PART
COMMERCIAL LIABILITY UMBRELLA COVERAGE PART
EMPLOYMENT-RELATED PRACTICES LIABILITY
FARM COVERAGE PART – FARM LIABILITY COVERAGE FORM
LIQUOR LIABILITY COVERAGE PART
POLLUTION LIABILITY COVERAGE PART
PRODUCTS/COMPLETED OPERATIONS LIABILITY COVERAGE PART

This endorsement also modifies insurance provided under the following when written as part of a Commercial Package Policy:

CAPITAL ASSETS PROGRAM (OUTPUT POLICY) COVERAGE PART
COMMERCIAL GENERAL LIABILITY COVERAGE PART
COMMERCIAL INLAND MARINE COVERAGE PART
COMMERCIAL LIABILITY UMBRELLA COVERAGE PART
COMMERCIAL PROPERTY COVERAGE PART
CRIME AND FIDELITY COVERAGE PART
EMPLOYMENT-RELATED PRACTICES LIABILITY
EQUIPMENT BREAKDOWN COVERAGE PART
FARM COVERAGE PART
LIQUOR LIABILITY COVERAGE PART
POLLUTION LIABILITY COVERAGE PART
PRODUCTS/COMPLETED OPERATIONS LIABILITY COVERAGE PART

A. Paragraph **2.** of the **Cancellation** Common Policy Condition is replaced by the following:

2. We may cancel this policy:

a. By mailing or delivering to the first Named Insured written notice of cancellation, stating the reason for cancellation, at least 10 days before the effective date of cancellation.

However, if this policy covers a condominium association, and the condominium property contains at least one residence or the condominium declarations conform with the Texas Uniform Condominium Act, then the notice of cancellation, as described above, will be provided to the first Named Insured 30 days before the effective date of cancellation. We will also provide 30 days' written notice to each unit-owner to whom we issued a certificate or memorandum of insurance, by mailing or delivering the notice to each last mailing address known to us.

© Insurance Services Office, Inc., 2013

b. For the following reasons, if this policy does not provide coverage to a governmental unit, as defined under 28 TEX. ADMIN. CODE, Section 5.7001 or on one- and two-family dwellings:

(1) If this policy has been in effect for 60 days or less, we may cancel for any reason except that, under the provisions of the Texas Insurance Code, we may not cancel this policy solely because the policyholder is an elected official.

(2) If this policy has been in effect for more than 60 days, or if it is a renewal or continuation of a policy issued by us, we may cancel only for one or more of the following reasons:

(a) Fraud in obtaining coverage;

(b) Failure to pay premiums when due;

(c) An increase in hazard within the control of the insured which would produce an increase in rate;

(d) Loss of our reinsurance covering all or part of the risk covered by the policy; or

(e) If we have been placed in supervision, conservatorship or receivership and the cancellation is approved or directed by the supervisor, conservator or receiver.

c. For the following reasons, if this policy provides coverage to a governmental unit, as defined under 28 TEX. ADMIN. CODE, Section 5.7001 or on one- and two-family dwellings:

(1) If this policy has been in effect for less than 90 days, we may cancel coverage for any reason.

(2) If this policy has been in effect for 90 days or more, or if it is a renewal or continuation of a policy issued by us, we may cancel coverage, only for the following reasons:

(a) If the first Named Insured does not pay the premium or any portion of the premium when due;

(b) If the Texas Department of Insurance determines that continuation of this policy would result in violation of the Texas Insurance Code or any other law governing the business of insurance in Texas;

(c) If the Named Insured submits a fraudulent claim; or

(d) If there is an increase in the hazard within the control of the Named Insured which would produce an increase in rate.

B. The following condition is added and supersedes any provision to the contrary:

Nonrenewal

1. We may elect not to renew this policy except that, under the provisions of the Texas Insurance Code, we may not refuse to renew this policy solely because the policyholder is an elected official.

2. This paragraph, **2.**, applies unless the policy qualifies under Paragraph **3.** below.

If we elect not to renew this policy, we may do so by mailing or delivering to the first Named Insured, at the last mailing address known to us, written notice of nonrenewal, stating the reason for nonrenewal, at least 60 days before the expiration date. If notice is mailed or delivered less than 60 days before the expiration date, this policy will remain in effect until the 61st day after the date on which the notice is mailed or delivered. Earned premium for any period of coverage that extends beyond the expiration date will be computed pro rata based on the previous year's premium.

3. If this policy covers a condominium association, and the condominium property contains at least one residence or the condominium declarations conform with the Texas Uniform Condominium Act, then we will mail or deliver written notice of nonrenewal, at least 30 days before the expiration or anniversary date of the policy, to:

a. The first Named Insured; and

b. Each unit-owner to whom we issued a certificate or memorandum of insurance.

We will mail or deliver such notice to each last mailing address known to us.

4. If notice is mailed, proof of mailing will be sufficient proof of notice.

5. The transfer of a policyholder between admitted companies within the same insurance group is not considered a refusal to renew.

 © Insurance Services Office, Inc., 2013

IL 00 03 09 08

THIS ENDORSEMENT CHANGES THE POLICY. PLEASE READ IT CAREFULLY.

CALCULATION OF PREMIUM

This endorsement modifies insurance provided under the following:

CAPITAL ASSETS PROGRAM (OUTPUT POLICY) COVERAGE PART
COMMERCIAL AUTOMOBILE COVERAGE PART
COMMERCIAL GENERAL LIABILITY COVERAGE PART
COMMERCIAL INLAND MARINE COVERAGE PART
COMMERCIAL PROPERTY COVERAGE PART
CRIME AND FIDELITY COVERAGE PART
EMPLOYMENT-RELATED PRACTICES LIABILITY COVERAGE PART
EQUIPMENT BREAKDOWN COVERAGE PART
FARM COVERAGE PART
LIQUOR LIABILITY COVERAGE PART
MEDICAL PROFESSIONAL LIABILITY COVERAGE PART
OWNERS AND CONTRACTORS PROTECTIVE LIABILITY COVERAGE PART
POLLUTION LIABILITY COVERAGE PART
PRODUCTS/COMPLETED OPERATIONS LIABILITY COVERAGE PART
RAILROAD PROTECTIVE LIABILITY COVERAGE PART

The following is added:

The premium shown in the Declarations was computed based on rates in effect at the time the policy was issued. On each renewal, continuation, or anniversary of the effective date of this policy, we will compute the premium in accordance with our rates and rules then in effect.

© ISO Properties, Inc., 2007

ZURICH

Combined Aggregate Deductible Schedule

Policy No.	Eff. Date of Pol.	Exp. Date of Pol.
GLO 0183287-00	08-01-2017	08-01-2023

THIS ENDORSEMENT CHANGES THE POLICY. PLEASE READ IT CAREFULLY.

This endorsement provides supplementary information to be used with the following:

Business Auto Coverage Form
Commercial General Liability Coverage Part
Employee Benefits Liability Coverage Part
Garage Coverage Form
Liquor Liability Coverage Part
Motor Carrier Coverage Form
Stop Gap – Employers Liability Coverage Part
Truckers Coverage Form
Workers Compensation and Employers Liability Policy

The Combined Aggregate Deductible is adjustable and determined as the sum of the rate(s) multiplied by the final audited Exposure(s).	Estimated Exposure	Rate	Per	Of (Exposure Basis)
				CONSTRUCTION VALUE

The Deductible Amounts for the policies listed here will be combined with this policy for the application of the Combined Aggregate Deductible Amount.

Policy Number(s):

WC 0183286-00			

Combined Aggregate Deductible Amount	$
Minimum Combined Aggregate Deductible Amount	$

ZURICH

Texas Important Notice

IMPORTANT NOTICE

To obtain information or make a complaint:

You may call Zurich North America's toll-free telephone number for information or to make a complaint at:

1-800-382-2150

You may contact the Texas Department of Insurance to obtain information on companies, coverages, rights, or complaints at:

1-800-252-3439

You may write the Texas Department of Insurance:
P.O. Box 149104
Austin, TX 78714-9104
Fax: (512) 490-1007
Web: www.tdi.texas.gov
E-mail: ConsumerProtection@tdi.texas.gov

PREMIUM OR CLAIM DISPUTES:

Should you have a dispute concerning your premium or about a claim, you should contact the company first. If the dispute is not resolved, you may contact the Texas Department of Insurance.

ATTACH THIS NOTICE TO YOUR POLICY:

This notice is for information only and does not become a part or condition of the attached document.

AVISO IMPORTANTE

Para obtener información o para presentar una queja:

Usted puede llamar al número de teléfono gratuito de Zurich North America's para obtener información o para presentar una queja al:

1-800-382-2150

Usted puede comunicarse con el Departamento de Seguros de Texas para obtener información sobre compañías, coberturas, derechos, o quejas al:

1-800-252-3439

Usted puede escribir al Departamento de Seguros de Texas a:
P.O. Box 149104
Austin, TX 78714-9104
Fax: (512) 490-1007
Sitio web: www.tdi.texas.gov
E-mail: ConsumerProtection@tdi.texas.gov

DISPUTAS POR PRIMAS DE SEGUROS O RECLAMACIONES:

Si tiene una disputa relacionada con su prima de seguro o con una reclamación, usted debe comunicarse con la compañía primero. Si la disputa no es resuelta, usted puede comunicarse con el Departamento de Seguros de Texas.

ADJUNTE ESTE AVISO A SU PÓLIZA: Este aviso es solamente para propósitos informativos y no se convierte en parte o en condición del documento adjunto.

ZURICH

Important Notice
Texas Safety Consultation Services

Zurich in North America has loss control services available at no additional charge.

If you would like additional information regarding these services, please contact us or visit our website. If you would like to request services, please complete the information on this form and mail it to the address listed below.

Zurich Services Corporation
Risk Engineering
1299 Zurich Way
Schaumburg, Illinois 60196-1056
1-800-982-5964
http://www.zurichna.com/riskengineering

☐ I request additional safety and health services

Company name

Contact name

Address

City | State | Zip code

Telephone number | Policy number

Recording And Distribution Of Material Or Information In Violation Of Law Exclusion

ZURICH

Policy No.	Eff. Date of Pol.	Exp. Date of Pol.	Eff. Date of End.	Producer No.	Add'l. Prem	Return Prem.
GLO 0183287-00	08/01/2017	08/01/2023		36140000	INCL	

THIS ENDORSEMENT CHANGES THE POLICY. PLEASE READ IT CAREFULLY.

This endorsement modifies insurance provided under the:

Commercial General Liability Coverage Part

A. Exclusion **q. Recording And Distribution Of Material Or Information In Violation Of Law** of Paragraph **2. Exclusions** of Section **I – Coverage A – Bodily Injury And Property Damage Liability** is replaced by the following:

2. Exclusions

This insurance does not apply to:

q. Recording And Distribution Of Material Or Information In Violation Of Law

"Bodily injury" or "property damage" directly or indirectly arising out of or based upon any action or omission that violates or is alleged to violate:

(1) The Telephone Consumer Protection Act (TCPA), including any amendment of or addition to such law;

(2) The CAN-SPAM Act of 2003, including any amendment of or addition to such law;

(3) The Fair Credit Reporting Act (FCRA), and any amendment of or addition to such law, including the Fair and Accurate Credit Transaction Act (FACTA); or

(4) Any federal, state or local statute, ordinance or regulation, other than the TCPA, CAN-SPAM Act of 2003 or FCRA and their amendments and additions, or any other legal liability, at common law or otherwise, that addresses, prohibits, or limits the printing, dissemination, disposal, monitoring, collecting, recording, use of, sending, transmitting, communicating or distribution of material or information.

B. Exclusion **p. Recording And Distribution Of Material Or Information In Violation Of Law** of Paragraph **2. Exclusions** of Section **I – Coverage B – Personal And Advertising Injury Liability** is replaced by the following:

2. Exclusions

This insurance does not apply to:

p. Recording And Distribution Of Material Or Information In Violation Of Law

"Personal and advertising injury" directly or indirectly arising out of or based upon any action or omission that violates or is alleged to violate:

(1) The Telephone Consumer Protection Act (TCPA), including any amendment of or addition to such law;

(2) The CAN-SPAM Act of 2003, including any amendment of or addition to such law;

(3) The Fair Credit Reporting Act (FCRA), and any amendment of or addition to such law, including the Fair and Accurate Credit Transaction Act (FACTA); or

Includes copyrighted material of Insurance Services Office, Inc., with its permission.

(4) Any federal, state or local statute, ordinance or regulation, other than the TCPA, CAN-SPAM Act of 2003 or FCRA and their amendments and additions, or any other legal liability, at common law or otherwise, that addresses, prohibits, or limits the printing, dissemination, disposal, monitoring, collecting, recording, use of, sending, transmitting, communicating or distribution of material or information.

All other terms and conditions of this policy remain unchanged.

Includes copyrighted material of Insurance Services Office, Inc., with its permission.

Premium And Reports Agreement – Composite Rated Policies – Controlled Insurance Program

Policy No.	Eff. Date of Pol.	Exp. Date of Pol.	Eff. Date of End.	Producer No.	Add'l. Prem	Return Prem.
GLO 0183287-00	08/01/2017	08/01/2023		36140000	INCL	

THIS ENDORSEMENT CHANGES THE POLICY. PLEASE READ IT CAREFULLY.

This endorsement modifies insurance provided under the:

Commercial General Liability Coverage Part

SCHEDULE

Bases of Premium (select one):

☐ **Per $100 of "Construction Value"**

☐ **Per $1,000 of "Construction Value"**

☐ **Per $100 of "Worker's Compensation payroll"**

☐ **Per $1,000 of "Worker's Compensation payroll"**

Described Classification, Estimated Exposure, Composite Rate, Estimated Premium:

Described Classification	Estimated Exposure	Composite Rate	Estimated Premium
CONSTRUCTION VALUE - PREM OPS			
CONSTRUCTION VALUE - PRODUCTS			
TOTAL RATE / PREMIUM			
TERRORISM (OF GL PREMIUM)			
TOTAL PREMIUM			

Advance /Deposit Premium: $

Minimum Premium: $

Includes copyrighted material of Insurance Services Office, Inc., with its permission.

Paragraph **5. Premium Audit** of Section **IV – Commercial General Liability Conditions** is replaced by the following:

5. Premium Audit

a. We will compute all premiums for this Coverage Part according to the Composite Rate(s) shown in the Schedule of this endorsement or attached hereto. We will compute the final premium due when we determine the actual exposures at the time of final audit. This endorsement does not include any terrorism premium. Any terrorism premium associated with this Coverage Part will be charged for and shown separately.

b. The first Named Insured shall pay the Advance / Deposit Premium shown in the Schedule of this endorsement on or before the first day of the policy period. In addition, the first Named Insured shall pay, within 20 days following the date of mailing or delivery of a statement of interim audited premium, any additional earned premium that we compute during any interim audit conducted by us during the policy period.

c. Within 180 days after the expiration date of the policy, we will conduct a final audit, which shall not be waived. We will compute the earned premium for the policy period by multiplying the Composite Rate for each Described Classification shown in the Schedule of this endorsement by the actual exposures as determined by such final audit. If the resulting earned premium is greater than the sum of the Advance / Deposit Premium shown in the Schedule and any interim audited premium, the first Named Insured shall pay us the excess; if less, we will return the unearned premium to the first Named Insured. However, the earned premium will not be less than the Minimum Premium shown in the Schedule. If no Minimum Premium is shown in the Schedule, such Minimum Premium shall be equal to the Advance / Deposit Premium shown in the Schedule.

d. The first Named Insured, all enrolled contractors and all enrolled subcontractors must keep records of the information we need for premium computation and send us copies at such times as we may request.

e. Solely with respect to this endorsement, the Composite Rate(s) applies Per $100 of Bases of Premium or Per $1,000 of Bases of Premium as indicated in the Schedule of this endorsement.

f. Solely with respect to this endorsement, the following items are defined:

(1) "Construction value":

(a) Means the gross amount of monies paid in connection with the "designated project(s)", including all amounts paid to enrolled contractors and enrolled subcontractors.

(b) Does not include:

(i) Insurance costs and fees, construction manager fees; land acquisition costs, architects, engineers and other design consultant fees, and costs associated with regulatory permits and approvals. However, if such costs and fees are used to determine the Advance / Deposit Premium shown in the Schedule of this endorsement at the beginning of the policy period due to information provided by you, such costs and fees will be considered part of the "construction value" amount;

(ii) Change orders initiated by the insured during the policy period or during an audit which address any items indicated under Paragraph **(b)(i)** above. Such change orders will not alter the "construction value" amount during the policy period or during an audit; or

(iii) Costs associated with the work performed prior to the effective date of the project.

(2) "Residential building construction" means "your work" for:

(a) Any structure occupied as, or intended to be occupied as a single family or multi-family dwelling, including but not limited to houses, townhomes, townhouses, condominiums, cooperatives, duplexes, triplexes, fourplexes or apartments;

(b) Any structure that combines any other use with "residential building construction" as described in Paragraph **(a)** above, provided such structure contains 50% or more of the occupancy or intended occupancy indicated in Paragraph **(a)** above, as measured in square footage; and

(c) Any other structure or improvement which is attached to or ancillary to any structure identified in Paragraphs **(a)** or **(b)** above,

constructed, reconstructed, remodeled or repaired.

Includes copyrighted material of Insurance Services Office, Inc., with its permission.

"Residential building construction" does not include "your work" for any structure that functions solely as time shares, a hotel, a motel, a nursing home, an assisted living senior housing care facility, a college campus dormitory or government housing on military bases.

(3) "All other construction" means "your work" that is not included under "residential building construction" above.

(4) "Worker's Compensation payroll" means Workers Compensation payroll as defined in our Workers Compensation Rating Manual(s).

All other terms and conditions of this policy remain unchanged.

Includes copyrighted material of Insurance Services Office, Inc., with its permission.

ZURICH

Primary and Non-Contributory – Designated Project – Controlled Insurance Program

Policy No.	Eff. Date of Pol.	Exp. Date of Pol.	Eff. Date of End.	Producer No.	Add'l. Prem	Return Prem.

THIS ENDORSEMENT CHANGES THE POLICY. PLEASE READ IT CAREFULLY.

This endorsement modifies insurance provided under the:

Commercial General Liability Coverage Part

A. Paragraph **4.a.** of the **Other Insurance** Condition under Section **IV – Commercial General Liability Conditions** is replaced by the following:

a. Primary Insurance

This insurance is primary except when Paragraph **b.** below applies. If this insurance is primary, our obligations are not affected unless any of the other insurance is also primary. Then:

(1) Solely with respect to any other primary general liability insurance:

(a) Available to you as a Named Insured; or

(b) Available to you as an additional insured,

purchased by an enrolled contractor or enrolled subcontractor performing work under their respective contract(s) at any "designated project", our insurance is primary and non-contributory.

In this event, we will not seek contribution from any other insurance.

(2) Except with respect to Paragraph **(1)** above, we will share with all that other insurance by the method described in Paragraph **c.** below.

B. Solely with respect to Paragraph **A.a.(1)** of this endorsement, Paragraph **4.b.** of the **Other Insurance** Condition under Section **IV – Commercial General Liability Conditions** is replaced by the following:

b. Excess Insurance

(1) This insurance is excess over any of the other insurance, whether primary, excess, contingent or on any other basis:

(a) That is Fire, Extended Coverage, Builder's Risk, Installation Risk or similar coverage for "your work";

(b) That is Fire insurance for premises rented to you or temporarily occupied by you with permission of the owner;

(c) That is insurance purchased by you to cover your liability as a tenant for "property damage" to premises rented to you or temporarily occupied by you with permission of the owner; or

(d) If the loss arises out of the maintenance or use of aircraft, "autos" or watercraft to the extent not subject to Exclusion **g.** of Section **I** – Coverage **A** – Bodily Injury And Property Damage Liability.

(2) When this insurance is excess, we will have no duty under Coverages **A** or **B** to defend the insured against any "suit" if any other insurer has a duty to defend the insured against that "suit". If no other insurer defends, we will undertake to do so, but we will be entitled to the insured's rights against all those other insurers.

(3) When this insurance is excess over other insurance, we will pay only our share of the amount of the loss, if any, that exceeds the sum of:

Includes copyrighted material of Insurance Services Office, Inc., with its permission.

(a) The total amount that all such other insurance would pay for the loss in the absence of this insurance; and

(b) The total of all deductible and self-insured amounts under all that other insurance.

All other terms and conditions of this policy remain unchanged.

Includes copyrighted material of Insurance Services Office, Inc., with its permission.

Notice of Error In Claim Reporting Endorsement

Policy No.	Eff. Date of Pol.	Exp. Date of Pol.	Eff. Date of End.	Producer	Add'l Prem.	Return Prem.
GLO 0183287 00	08/01/2017	08/01/2023		36140000	$ INCL	$

THIS ENDORSEMENT CHANGES THE POLICY. PLEASE READ IT CAREFULLY.

This endorsement modifies insurance provided under the:

Commercial General Liability Coverage Part

The following is added to **Duties In The Event Of Occurrence, Offense, Claim or Suit** of **Section IV - Commercial General Liability Conditions**:

e. In the event that an insured reports an "occurrence" to the workers compensation carrier of the named insured, and this "occurrence" later develops into a General Liability claim covered by this policy, the failure to report such "occurrence" to us at the time of the "occurrence" shall not be deemed in violation of this condition. You must, however, give us notice as soon as practicable after being made aware that the particular claim is a General Liability rather than a Workers Compensation claim.

Silica or Silica Mixed Dust Exclusion

Policy No.	Eff. Date of Pol.	Exp. Date of Pol.	Eff. Date of End.	Producer	Add'l Prem.	Return Prem.
GLO 0183287 00	08/01/2017	08/01/2023		36140000	$ INCL	$

THIS ENDORSEMENT CHANGES THE POLICY. PLEASE READ IT CAREFULLY.

This endorsement modifies insurance provided under the:

Commercial General Liability Coverage Part
Products-Completed Operations Liability Coverage Part

The following additional exclusion is added to **2. Exclusions** of **Section I. Coverages**:

2. Exclusions

This insurance does not apply to:

Silica or Silica Mixed Dust

A. "Bodily injury", "property damage" or "personal and advertising injury" caused directly or indirectly, in whole or in part, by the actual, alleged or threatened inhalation, ingestion, absorption, exposure to, existence of or presence of "silica"; or

B. Loss, costs or expenses arising out of the abating, testing for, monitoring, cleaning up, removing, containing, treating, detoxifying, neutralizing, remediating or disposing of, or in any manner responding to or assessing the effects of "silica" by any insured or by any other person or entity.

C. For the purposes of this exclusion, the following definition applies:

"Silica" means:

(1) Any form of crystalline or non-crystalline (amorphous) silica, silica particles, silica compounds, silica dust or silica mixed or combined with dust or other particles; or

(2) Synthetic silica, including precipitated silica, silica gel, pyrogenic or fumed silica or silica-flour.

Includes copyrighted material of Insurance Services Office, Inc. with its permission.

COMMERCIAL GENERAL LIABILITY COVERAGE PART DECLARATIONS

Policy Number: GLO 0183287-00

ZURICH AMERICAN INSURANCE COMPANY

Named Insured THE BOARD OF REGENTS OF THE

Policy Period: Coverage begins 08-01-2017 at 12:01 A.M.; Coverage ends 08-01-2023 at 12:01 A.M.

Producer Name: MARSH USA INC Producer No. 36140-000

Item 1. Business Description:

Item 2. Limits of Insurance

GENERAL AGGREGATE LIMIT	$ 5,000,000	
PRODUCTS-COMPLETED OPERATIONS AGGREGATE LIMIT	$ 5,000,000	
EACH OCCURRENCE LIMIT	$ 2,000,000	
DAMAGE TO PREMISES RENTED TO YOU LIMIT	$ 250,000	Any one premises
MEDICAL EXPENSE LIMIT	$ 10,000	Any one person
PERSONAL AND ADVERTISING INJURY LIMIT	$ 2,000,000	Any one person or organization

Item 3. Retroactive Date **(CG 00 02 ONLY)**

This insurance does not apply to "bodily injury", "property damage" or "personal and advertising injury" offense which occurs before the Retroactive Date, if any, shown here: NONE
(Enter Date or "None" if no Retroactive Date applies)

Item 4. Form of Business and Location Premises

Form of Business: CORPORATION

Location of All Premises You Own, Rent or Occupy: **See Schedule of Locations**

Item 5. Schedule of Forms and Endorsements

Form(s) and Endorsement(s) made a part of this Policy at time of issue:
See Schedule of Forms and Endorsements

Item 6. Premiums

Coverage Part Premium:	$
Other Premium:	
Total Premium:	$

Fellow Employee Coverage – Designated Employees/Positions

Policy No.	Eff. Date of Pol.	Exp. Date of Pol.	Eff. Date of End.	Producer No.	Add'l. Prem	Return Prem.

Named Insured / Mailing Address:

THE BOARD OF REGENTS OF THE
UNIVERSITY OF TEXAS SYSTEM
210 W 7TH ST
AUSTIN TX 78701

Producer:

36140-000

THIS ENDORSEMENT CHANGES THE POLICY. PLEASE READ IT CAREFULLY.

This endorsement modifies insurance provided under the:
COMMERCIAL GENERAL LIABILITY COVERAGE PART

SCHEDULE

Name of Person(s), Job Title(s) or Position(s):
SUPERVISORY PERSONNEL OR ONSITE PROJECT MANAGEMENT

(If no entry appears above, the position of "executive officer" applies.)

Solely with respect to the "employee(s)" shown in the Schedule above, the following is added at the end of Paragraph **2.a.(1)(a)** of **Section II – Who Is An Insured**:

However, the "employee(s)" shown in the Schedule above is considered an insured(s) for "bodily injury" or "personal and advertising injury" to a co-"employee" while such co-"employee" is in the course of his or her employment or performing duties related to the conduct of your business.

All other terms and conditions of your Policy remain unchanged.

Includes copyrighted material of Insurance Services Office, Inc. with its permission.

Designated Project – Declarations

ZURICH

Policy No.	Eff. Date of Pol.	Exp. Date of Pol.	Eff. Date of End.	Producer No.	Add'l. Prem	Return Prem.

THIS ENDORSEMENT CHANGES THE POLICY. PLEASE READ IT CAREFULLY.

This endorsement modifies insurance provided under the:

Commercial General Liability Coverage Part

SCHEDULE

"Designated Project" Name: All Projects $100,000,000 or greater in Construction Value

Refer to Monthly Report in file which includes each project identified in the Marsh Monthly Report for the University of Texas System Rolling Owner Controlled Insurance Program Phase VII with coverage for such project beginning on the notice to proceed date as listed in the Report.

"Designated Project" Address:

"Designated Project" Start Date: "Designated Project" Duration:

Number of Condo Units: Contract Value:

"Designated Project" Description:

The Extended Completed Operations Coverage Period for the "designated project(s)" is __10__ years or the statute of repose applicable to the "designated project(s)", whichever is less (if blank, the Period is 5 years).

Products-Completed Operations Aggregate Limit

The Products-Completed Operations Aggregate Limit shown in the Declarations of this policy shall apply as designated below for the "designated project(s)" in this endorsement, subject to the terms and the Policy Products-Completed Operations Aggregate Limit shown in endorsement U-GL-1313 Amendment of Limits – Products-Completed Operations Aggregate Limit.

1. Select either **A.** or **B.** (if none is selected **A.** shall apply):

   ____ **A.** The Products-Completed Operations Aggregate Limit applies once for all "designated projects" for which **A.** is selected, and does not apply separately to each "designated project".

   __X__ **B.** The Products-Completed Operations Aggregate Limit applies separately to each "designated project" for which **B.** is selected.

2. Select either **C.** or **D.** (if none is selected **C.** shall apply):

   ____ **C.** The Products-Completed Operations Aggregate Limit applies once for the policy period and extended completed operations period combined.

   __X__ **D.** The Products-Completed Operations Aggregate Limit applies once to the policy period, and a separate Products-Completed Operations Aggregate Limit of $5,000,000 applies to the extended completed operations coverage period (if no amount is entered the amount of the Products-Completed Operations Aggregate Limit on the Declarations of this policy shall apply).

All other terms and conditions of this policy remain unchanged.

Includes copyrighted material of Insurance Services Office, Inc., with its permission.

Designated Project – Declarations

ZURICH

Policy No.	Eff. Date of Pol.	Exp. Date of Pol.	Eff. Date of End.	Producer No.	Add'l. Prem	Return Prem.

THIS ENDORSEMENT CHANGES THE POLICY. PLEASE READ IT CAREFULLY.

This endorsement modifies insurance provided under the:

Commercial General Liability Coverage Part

SCHEDULE

"Designated Project" Name: All Projects Under $100,000,000 in Construction Value

Refer to Monthly Report in file which includes each project identified in the Marsh Monthly Report for the University of Texas System Rolling Owner Controlled Insurance Program Phase VII with coverage for such project beginning on the notice to proceed date as listed in the Report.

"Designated Project" Address:

"Designated Project" Start Date: "Designated Project" Duration:

Number of Condo Units: Contract Value:

"Designated Project" Description:

The Extended Completed Operations Coverage Period for the "designated project(s)" is _10_ years or the statute of repose applicable to the "designated project(s)", whichever is less (if blank, the Period is 5 years).

Products-Completed Operations Aggregate Limit

The Products-Completed Operations Aggregate Limit shown in the Declarations of this policy shall apply as designated below for the "designated project(s)" in this endorsement, subject to the terms and the Policy Products-Completed Operations Aggregate Limit shown in endorsement U-GL-1313 Amendment of Limits – Products-Completed Operations Aggregate Limit.

1. Select either **A.** or **B.** (if none is selected **A.** shall apply):

   _X_ **A.** The Products-Completed Operations Aggregate Limit applies once for all "designated projects" for which **A.** is selected, and does not apply separately to each "designated project".

   ___ **B.** The Products-Completed Operations Aggregate Limit applies separately to each "designated project" for which **B.** is selected.

2. Select either **C.** or **D.** (if none is selected **C.** shall apply):

   ___ **C.** The Products-Completed Operations Aggregate Limit applies once for the policy period and extended completed operations period combined.

   _X_ **D.** The Products-Completed Operations Aggregate Limit applies once to the policy period, and a separate Products-Completed Operations Aggregate Limit of $5,000,000 applies to the extended completed operations coverage period (if no amount is entered the amount of the Products-Completed Operations Aggregate Limit on the Declarations of this policy shall apply).

All other terms and conditions of this policy remain unchanged.

Includes copyrighted material of Insurance Services Office, Inc., with its permission.

COMMERCIAL GENERAL LIABILITY COVERAGE FORM

Various provisions in this policy restrict coverage. Read the entire policy carefully to determine rights, duties and what is and is not covered.

Throughout this policy the words "you" and "your" refer to the Named Insured shown in the Declarations, and any other person or organization qualifying as a Named Insured under this policy. The words "we", "us" and "our" refer to the company providing this insurance.

The word "insured" means any person or organization qualifying as such under Section **II** – Who Is An Insured.

Other words and phrases that appear in quotation marks have special meaning. Refer to Section **V** – Definitions.

SECTION I – COVERAGES

COVERAGE A – BODILY INJURY AND PROPERTY DAMAGE LIABILITY

1. Insuring Agreement

a. We will pay those sums that the insured becomes legally obligated to pay as damages because of "bodily injury" or "property damage" to which this insurance applies. We will have the right and duty to defend the insured against any "suit" seeking those damages. However, we will have no duty to defend the insured against any "suit" seeking damages for "bodily injury" or "property damage" to which this insurance does not apply. We may, at our discretion, investigate any "occurrence" and settle any claim or "suit" that may result. But:

(1) The amount we will pay for damages is limited as described in Section **III** – Limits Of Insurance; and

(2) Our right and duty to defend ends when we have used up the applicable limit of insurance in the payment of judgments or settlements under Coverages **A** or **B** or medical expenses under Coverage **C.**

No other obligation or liability to pay sums or perform acts or services is covered unless explicitly provided for under Supplementary Payments – Coverages **A** and **B.**

b. This insurance applies to "bodily injury" and "property damage" only if:

(1) The "bodily injury" or "property damage" is caused by an "occurrence" that takes place in the "coverage territory";

(2) The "bodily injury" or "property damage" occurs during the policy period; and

(3) Prior to the policy period, no insured listed under Paragraph **1.** of Section **II** – Who Is An Insured and no "employee" authorized by you to give or receive notice of an "occurrence" or claim, knew that the "bodily injury" or "property damage" had occurred, in whole or in part. If such a listed insured or authorized "employee" knew, prior to the policy period, that the "bodily injury" or "property damage" occurred, then any continuation, change or resumption of such "bodily injury" or "property damage" during or after the policy period will be deemed to have been known prior to the policy period.

c. "Bodily injury" or "property damage" which occurs during the policy period and was not, prior to the policy period, known to have occurred by any insured listed under Paragraph **1.** of Section **II** – Who Is An Insured or any "employee" authorized by you to give or receive notice of an "occurrence" or claim, includes any continuation, change or resumption of that "bodily injury" or "property damage" after the end of the policy period.

d. "Bodily injury" or "property damage" will be deemed to have been known to have occurred at the earliest time when any insured listed under Paragraph **1.** of Section **II** – Who Is An Insured or any "employee" authorized by you to give or receive notice of an "occurrence" or claim:

(1) Reports all, or any part, of the "bodily injury" or "property damage" to us or any other insurer;

(2) Receives a written or verbal demand or claim for damages because of the "bodily injury" or "property damage"; or

(3) Becomes aware by any other means that "bodily injury" or "property damage" has occurred or has begun to occur.

e. Damages because of "bodily injury" include damages claimed by any person or organization for care, loss of services or death resulting at any time from the "bodily injury".

 © Insurance Services Office, Inc., 2012

2. Exclusions

This insurance does not apply to:

a. Expected Or Intended Injury

"Bodily injury" or "property damage" expected or intended from the standpoint of the insured. This exclusion does not apply to "bodily injury" resulting from the use of reasonable force to protect persons or property.

b. Contractual Liability

"Bodily injury" or "property damage" for which the insured is obligated to pay damages by reason of the assumption of liability in a contract or agreement. This exclusion does not apply to liability for damages:

(1) That the insured would have in the absence of the contract or agreement; or

(2) Assumed in a contract or agreement that is an "insured contract", provided the "bodily injury" or "property damage" occurs subsequent to the execution of the contract or agreement. Solely for the purposes of liability assumed in an "insured contract", reasonable attorneys' fees and necessary litigation expenses incurred by or for a party other than an insured are deemed to be damages because of "bodily injury" or "property damage", provided:

(a) Liability to such party for, or for the cost of, that party's defense has also been assumed in the same "insured contract"; and

(b) Such attorneys' fees and litigation expenses are for defense of that party against a civil or alternative dispute resolution proceeding in which damages to which this insurance applies are alleged.

c. Liquor Liability

"Bodily injury" or "property damage" for which any insured may be held liable by reason of:

(1) Causing or contributing to the intoxication of any person;

(2) The furnishing of alcoholic beverages to a person under the legal drinking age or under the influence of alcohol; or

(3) Any statute, ordinance or regulation relating to the sale, gift, distribution or use of alcoholic beverages.

This exclusion applies even if the claims against any insured allege negligence or other wrongdoing in:

(a) The supervision, hiring, employment, training or monitoring of others by that insured; or

(b) Providing or failing to provide transportation with respect to any person that may be under the influence of alcohol;

if the "occurrence" which caused the "bodily injury" or "property damage", involved that which is described in Paragraph **(1)**, **(2)** or **(3)** above.

However, this exclusion applies only if you are in the business of manufacturing, distributing, selling, serving or furnishing alcoholic beverages. For the purposes of this exclusion, permitting a person to bring alcoholic beverages on your premises, for consumption on your premises, whether or not a fee is charged or a license is required for such activity, is not by itself considered the business of selling, serving or furnishing alcoholic beverages.

d. Workers' Compensation And Similar Laws

Any obligation of the insured under a workers' compensation, disability benefits or unemployment compensation law or any similar law.

e. Employer's Liability

"Bodily injury" to:

(1) An "employee" of the insured arising out of and in the course of:

(a) Employment by the insured; or

(b) Performing duties related to the conduct of the insured's business; or

(2) The spouse, child, parent, brother or sister of that "employee" as a consequence of Paragraph **(1)** above.

This exclusion applies whether the insured may be liable as an employer or in any other capacity and to any obligation to share damages with or repay someone else who must pay damages because of the injury.

This exclusion does not apply to liability assumed by the insured under an "insured contract".

© Insurance Services Office, Inc., 2012

f. Pollution

(1) "Bodily injury" or "property damage" arising out of the actual, alleged or threatened discharge, dispersal, seepage, migration, release or escape of "pollutants":

(a) At or from any premises, site or location which is or was at any time owned or occupied by, or rented or loaned to, any insured. However, this subparagraph does not apply to:

(i) "Bodily injury" if sustained within a building and caused by smoke, fumes, vapor or soot produced by or originating from equipment that is used to heat, cool or dehumidify the building, or equipment that is used to heat water for personal use, by the building's occupants or their guests;

(ii) "Bodily injury" or "property damage" for which you may be held liable, if you are a contractor and the owner or lessee of such premises, site or location has been added to your policy as an additional insured with respect to your ongoing operations performed for that additional insured at that premises, site or location and such premises, site or location is not and never was owned or occupied by, or rented or loaned to, any insured, other than that additional insured; or

(iii) "Bodily injury" or "property damage" arising out of heat, smoke or fumes from a "hostile fire";

(b) At or from any premises, site or location which is or was at any time used by or for any insured or others for the handling, storage, disposal, processing or treatment of waste;

(c) Which are or were at any time transported, handled, stored, treated, disposed of, or processed as waste by or for:

(i) Any insured; or

(ii) Any person or organization for whom you may be legally responsible; or

(d) At or from any premises, site or location on which any insured or any contractors or subcontractors working directly or indirectly on any insured's behalf are performing operations if the "pollutants" are brought on or to the premises, site or location in connection with such operations by such insured, contractor or subcontractor. However, this subparagraph does not apply to:

(i) "Bodily injury" or "property damage" arising out of the escape of fuels, lubricants or other operating fluids which are needed to perform the normal electrical, hydraulic or mechanical functions necessary for the operation of "mobile equipment" or its parts, if such fuels, lubricants or other operating fluids escape from a vehicle part designed to hold, store or receive them. This exception does not apply if the "bodily injury" or "property damage" arises out of the intentional discharge, dispersal or release of the fuels, lubricants or other operating fluids, or if such fuels, lubricants or other operating fluids are brought on or to the premises, site or location with the intent that they be discharged, dispersed or released as part of the operations being performed by such insured, contractor or subcontractor;

(ii) "Bodily injury" or "property damage" sustained within a building and caused by the release of gases, fumes or vapors from materials brought into that building in connection with operations being performed by you or on your behalf by a contractor or subcontractor; or

(iii) "Bodily injury" or "property damage" arising out of heat, smoke or fumes from a "hostile fire".

(e) At or from any premises, site or location on which any insured or any contractors or subcontractors working directly or indirectly on any insured's behalf are performing operations if the operations are to test for, monitor, clean up, remove, contain, treat, detoxify or neutralize, or in any way respond to, or assess the effects of, "pollutants".

© Insurance Services Office, Inc., 2012

(2) Any loss, cost or expense arising out of any:

(a) Request, demand, order or statutory or regulatory requirement that any insured or others test for, monitor, clean up, remove, contain, treat, detoxify or neutralize, or in any way respond to, or assess the effects of, "pollutants"; or

(b) Claim or suit by or on behalf of a governmental authority for damages because of testing for, monitoring, cleaning up, removing, containing, treating, detoxifying or neutralizing, or in any way responding to, or assessing the effects of, "pollutants".

However, this paragraph does not apply to liability for damages because of "property damage" that the insured would have in the absence of such request, demand, order or statutory or regulatory requirement, or such claim or "suit" by or on behalf of a governmental authority.

g. Aircraft, Auto Or Watercraft

"Bodily injury" or "property damage" arising out of the ownership, maintenance, use or entrustment to others of any aircraft, "auto" or watercraft owned or operated by or rented or loaned to any insured. Use includes operation and "loading or unloading".

This exclusion applies even if the claims against any insured allege negligence or other wrongdoing in the supervision, hiring, employment, training or monitoring of others by that insured, if the "occurrence" which caused the "bodily injury" or "property damage" involved the ownership, maintenance, use or entrustment to others of any aircraft, "auto" or watercraft that is owned or operated by or rented or loaned to any insured.

This exclusion does not apply to:

(1) A watercraft while ashore on premises you own or rent;

(2) A watercraft you do not own that is:

(a) Less than 26 feet long; and

(b) Not being used to carry persons or property for a charge;

(3) Parking an "auto" on, or on the ways next to, premises you own or rent, provided the "auto" is not owned by or rented or loaned to you or the insured;

(4) Liability assumed under any "insured contract" for the ownership, maintenance or use of aircraft or watercraft; or

(5) "Bodily injury" or "property damage" arising out of:

(a) The operation of machinery or equipment that is attached to, or part of, a land vehicle that would qualify under the definition of "mobile equipment" if it were not subject to a compulsory or financial responsibility law or other motor vehicle insurance law where it is licensed or principally garaged; or

(b) The operation of any of the machinery or equipment listed in Paragraph **f.(2)** or **f.(3)** of the definition of "mobile equipment".

h. Mobile Equipment

"Bodily injury" or "property damage" arising out of:

(1) The transportation of "mobile equipment" by an "auto" owned or operated by or rented or loaned to any insured; or

(2) The use of "mobile equipment" in, or while in practice for, or while being prepared for, any prearranged racing, speed, demolition, or stunting activity.

i. War

"Bodily injury" or "property damage", however caused, arising, directly or indirectly, out of:

(1) War, including undeclared or civil war;

(2) Warlike action by a military force, including action in hindering or defending against an actual or expected attack, by any government, sovereign or other authority using military personnel or other agents; or

(3) Insurrection, rebellion, revolution, usurped power, or action taken by governmental authority in hindering or defending against any of these.

j. Damage To Property

"Property damage" to:

(1) Property you own, rent, or occupy, including any costs or expenses incurred by you, or any other person, organization or entity, for repair, replacement, enhancement, restoration or maintenance of such property for any reason, including prevention of injury to a person or damage to another's property;

(2) Premises you sell, give away or abandon, if the "property damage" arises out of any part of those premises;

(3) Property loaned to you;

© Insurance Services Office, Inc., 2012

(4) Personal property in the care, custody or control of the insured;

(5) That particular part of real property on which you or any contractors or subcontractors working directly or indirectly on your behalf are performing operations, if the "property damage" arises out of those operations; or

(6) That particular part of any property that must be restored, repaired or replaced because "your work" was incorrectly performed on it.

Paragraphs **(1)**, **(3)** and **(4)** of this exclusion do not apply to "property damage" (other than damage by fire) to premises, including the contents of such premises, rented to you for a period of seven or fewer consecutive days. A separate limit of insurance applies to Damage To Premises Rented To You as described in Section **III** – Limits Of Insurance.

Paragraph **(2)** of this exclusion does not apply if the premises are "your work" and were never occupied, rented or held for rental by you.

Paragraphs **(3)**, **(4)**, **(5)** and **(6)** of this exclusion do not apply to liability assumed under a sidetrack agreement.

Paragraph **(6)** of this exclusion does not apply to "property damage" included in the "products-completed operations hazard".

k. Damage To Your Product

"Property damage" to "your product" arising out of it or any part of it.

l. Damage To Your Work

"Property damage" to "your work" arising out of it or any part of it and included in the "products-completed operations hazard".

This exclusion does not apply if the damaged work or the work out of which the damage arises was performed on your behalf by a subcontractor.

m. Damage To Impaired Property Or Property Not Physically Injured

"Property damage" to "impaired property" or property that has not been physically injured, arising out of:

(1) A defect, deficiency, inadequacy or dangerous condition in "your product" or "your work"; or

(2) A delay or failure by you or anyone acting on your behalf to perform a contract or agreement in accordance with its terms.

This exclusion does not apply to the loss of use of other property arising out of sudden and accidental physical injury to "your product" or "your work" after it has been put to its intended use.

n. Recall Of Products, Work Or Impaired Property

Damages claimed for any loss, cost or expense incurred by you or others for the loss of use, withdrawal, recall, inspection, repair, replacement, adjustment, removal or disposal of:

(1) "Your product";

(2) "Your work"; or

(3) "Impaired property";

if such product, work, or property is withdrawn or recalled from the market or from use by any person or organization because of a known or suspected defect, deficiency, inadequacy or dangerous condition in it.

o. Personal And Advertising Injury

"Bodily injury" arising out of "personal and advertising injury".

p. Electronic Data

Damages arising out of the loss of, loss of use of, damage to, corruption of, inability to access, or inability to manipulate electronic data.

However, this exclusion does not apply to liability for damages because of "bodily injury".

As used in this exclusion, electronic data means information, facts or programs stored as or on, created or used on, or transmitted to or from computer software, including systems and applications software, hard or floppy disks, CD-ROMs, tapes, drives, cells, data processing devices or any other media which are used with electronically controlled equipment.

q. Recording And Distribution Of Material Or Information In Violation Of Law

"Bodily injury" or "property damage" arising directly or indirectly out of any action or omission that violates or is alleged to violate:

(1) The Telephone Consumer Protection Act (TCPA), including any amendment of or addition to such law;

(2) The CAN-SPAM Act of 2003, including any amendment of or addition to such law;

(3) The Fair Credit Reporting Act (FCRA), and any amendment of or addition to such law, including the Fair and Accurate Credit Transactions Act (FACTA); or

© Insurance Services Office, Inc., 2012

(4) Any federal, state or local statute, ordinance or regulation, other than the TCPA, CAN-SPAM Act of 2003 or FCRA and their amendments and additions, that addresses, prohibits, or limits the printing, dissemination, disposal, collecting, recording, sending, transmitting, communicating or distribution of material or information.

Exclusions **c.** through **n.** do not apply to damage by fire to premises while rented to you or temporarily occupied by you with permission of the owner. A separate limit of insurance applies to this coverage as described in Section **III** – Limits Of Insurance.

COVERAGE B – PERSONAL AND ADVERTISING INJURY LIABILITY

1. Insuring Agreement

a. We will pay those sums that the insured becomes legally obligated to pay as damages because of "personal and advertising injury" to which this insurance applies. We will have the right and duty to defend the insured against any "suit" seeking those damages. However, we will have no duty to defend the insured against any "suit" seeking damages for "personal and advertising injury" to which this insurance does not apply. We may, at our discretion, investigate any offense and settle any claim or "suit" that may result. But:

(1) The amount we will pay for damages is limited as described in Section **III** – Limits Of Insurance; and

(2) Our right and duty to defend end when we have used up the applicable limit of insurance in the payment of judgments or settlements under Coverages **A** or **B** or medical expenses under Coverage **C.**

No other obligation or liability to pay sums or perform acts or services is covered unless explicitly provided for under Supplementary Payments – Coverages **A** and **B.**

b. This insurance applies to "personal and advertising injury" caused by an offense arising out of your business but only if the offense was committed in the "coverage territory" during the policy period.

2. Exclusions

This insurance does not apply to:

a. Knowing Violation Of Rights Of Another

"Personal and advertising injury" caused by or at the direction of the insured with the knowledge that the act would violate the rights of another and would inflict "personal and advertising injury".

b. Material Published With Knowledge Of Falsity

"Personal and advertising injury" arising out of oral or written publication, in any manner, of material, if done by or at the direction of the insured with knowledge of its falsity.

c. Material Published Prior To Policy Period

"Personal and advertising injury" arising out of oral or written publication, in any manner, of material whose first publication took place before the beginning of the policy period.

d. Criminal Acts

"Personal and advertising injury" arising out of a criminal act committed by or at the direction of the insured.

e. Contractual Liability

"Personal and advertising injury" for which the insured has assumed liability in a contract or agreement. This exclusion does not apply to liability for damages that the insured would have in the absence of the contract or agreement.

f. Breach Of Contract

"Personal and advertising injury" arising out of a breach of contract, except an implied contract to use another's advertising idea in your "advertisement".

g. Quality Or Performance Of Goods – Failure To Conform To Statements

"Personal and advertising injury" arising out of the failure of goods, products or services to conform with any statement of quality or performance made in your "advertisement".

h. Wrong Description Of Prices

"Personal and advertising injury" arising out of the wrong description of the price of goods, products or services stated in your "advertisement".

© Insurance Services Office, Inc., 2012

i. Infringement Of Copyright, Patent, Trademark Or Trade Secret

"Personal and advertising injury" arising out of the infringement of copyright, patent, trademark, trade secret or other intellectual property rights. Under this exclusion, such other intellectual property rights do not include the use of another's advertising idea in your "advertisement".

However, this exclusion does not apply to infringement, in your "advertisement", of copyright, trade dress or slogan.

j. Insureds In Media And Internet Type Businesses

"Personal and advertising injury" committed by an insured whose business is:

(1) Advertising, broadcasting, publishing or telecasting;

(2) Designing or determining content of web sites for others; or

(3) An Internet search, access, content or service provider.

However, this exclusion does not apply to Paragraphs **14.a.**, **b.** and **c.** of "personal and advertising injury" under the Definitions section.

For the purposes of this exclusion, the placing of frames, borders or links, or advertising, for you or others anywhere on the Internet, is not by itself, considered the business of advertising, broadcasting, publishing or telecasting.

k. Electronic Chatrooms Or Bulletin Boards

"Personal and advertising injury" arising out of an electronic chatroom or bulletin board the insured hosts, owns, or over which the insured exercises control.

l. Unauthorized Use Of Another's Name Or Product

"Personal and advertising injury" arising out of the unauthorized use of another's name or product in your e-mail address, domain name or metatag, or any other similar tactics to mislead another's potential customers.

m. Pollution

"Personal and advertising injury" arising out of the actual, alleged or threatened discharge, dispersal, seepage, migration, release or escape of "pollutants" at any time.

n. Pollution-related

Any loss, cost or expense arising out of any:

(1) Request, demand, order or statutory or regulatory requirement that any insured or others test for, monitor, clean up, remove, contain, treat, detoxify or neutralize, or in any way respond to, or assess the effects of, "pollutants"; or

(2) Claim or suit by or on behalf of a governmental authority for damages because of testing for, monitoring, cleaning up, removing, containing, treating, detoxifying or neutralizing, or in any way responding to, or assessing the effects of, "pollutants".

o. War

"Personal and advertising injury", however caused, arising, directly or indirectly, out of:

(1) War, including undeclared or civil war;

(2) Warlike action by a military force, including action in hindering or defending against an actual or expected attack, by any government, sovereign or other authority using military personnel or other agents; or

(3) Insurrection, rebellion, revolution, usurped power, or action taken by governmental authority in hindering or defending against any of these.

p. Recording And Distribution Of Material Or Information In Violation Of Law

"Personal and advertising injury" arising directly or indirectly out of any action or omission that violates or is alleged to violate:

(1) The Telephone Consumer Protection Act (TCPA), including any amendment of or addition to such law;

(2) The CAN-SPAM Act of 2003, including any amendment of or addition to such law;

(3) The Fair Credit Reporting Act (FCRA), and any amendment of or addition to such law, including the Fair and Accurate Credit Transactions Act (FACTA); or

(4) Any federal, state or local statute, ordinance or regulation, other than the TCPA, CAN-SPAM Act of 2003 or FCRA and their amendments and additions, that addresses, prohibits, or limits the printing, dissemination, disposal, collecting, recording, sending, transmitting, communicating or distribution of material or information.

© Insurance Services Office, Inc., 2012

COVERAGE C – MEDICAL PAYMENTS

1. **Insuring Agreement**

   a. We will pay medical expenses as described below for "bodily injury" caused by an accident:

      (1) On premises you own or rent;

      (2) On ways next to premises you own or rent; or

      (3) Because of your operations;

      provided that:

      (a) The accident takes place in the "coverage territory" and during the policy period;

      (b) The expenses are incurred and reported to us within one year of the date of the accident; and

      (c) The injured person submits to examination, at our expense, by physicians of our choice as often as we reasonably require.

   b. We will make these payments regardless of fault. These payments will not exceed the applicable limit of insurance. We will pay reasonable expenses for:

      (1) First aid administered at the time of an accident;

      (2) Necessary medical, surgical, X-ray and dental services, including prosthetic devices; and

      (3) Necessary ambulance, hospital, professional nursing and funeral services.

2. **Exclusions**

   We will not pay expenses for "bodily injury":

   a. **Any Insured**

      To any insured, except "volunteer workers".

   b. **Hired Person**

      To a person hired to do work for or on behalf of any insured or a tenant of any insured.

   c. **Injury On Normally Occupied Premises**

      To a person injured on that part of premises you own or rent that the person normally occupies.

   d. **Workers' Compensation And Similar Laws**

      To a person, whether or not an "employee" of any insured, if benefits for the "bodily injury" are payable or must be provided under a workers' compensation or disability benefits law or a similar law.

   e. **Athletics Activities**

      To a person injured while practicing, instructing or participating in any physical exercises or games, sports, or athletic contests.

   f. **Products-Completed Operations Hazard**

      Included within the "products-completed operations hazard".

   g. **Coverage A Exclusions**

      Excluded under Coverage **A.**

SUPPLEMENTARY PAYMENTS – COVERAGES A AND B

1. We will pay, with respect to any claim we investigate or settle, or any "suit" against an insured we defend:

   a. All expenses we incur.

   b. Up to $250 for cost of bail bonds required because of accidents or traffic law violations arising out of the use of any vehicle to which the Bodily Injury Liability Coverage applies. We do not have to furnish these bonds.

   c. The cost of bonds to release attachments, but only for bond amounts within the applicable limit of insurance. We do not have to furnish these bonds.

   d. All reasonable expenses incurred by the insured at our request to assist us in the investigation or defense of the claim or "suit", including actual loss of earnings up to $250 a day because of time off from work.

   e. All court costs taxed against the insured in the "suit". However, these payments do not include attorneys' fees or attorneys' expenses taxed against the insured.

   f. Prejudgment interest awarded against the insured on that part of the judgment we pay. If we make an offer to pay the applicable limit of insurance, we will not pay any prejudgment interest based on that period of time after the offer.

© Insurance Services Office, Inc., 2012

g. All interest on the full amount of any judgment that accrues after entry of the judgment and before we have paid, offered to pay, or deposited in court the part of the judgment that is within the applicable limit of insurance.

These payments will not reduce the limits of insurance.

2. If we defend an insured against a "suit" and an indemnitee of the insured is also named as a party to the "suit", we will defend that indemnitee if all of the following conditions are met:

a. The "suit" against the indemnitee seeks damages for which the insured has assumed the liability of the indemnitee in a contract or agreement that is an "insured contract";

b. This insurance applies to such liability assumed by the insured;

c. The obligation to defend, or the cost of the defense of, that indemnitee, has also been assumed by the insured in the same "insured contract";

d. The allegations in the "suit" and the information we know about the "occurrence" are such that no conflict appears to exist between the interests of the insured and the interests of the indemnitee;

e. The indemnitee and the insured ask us to conduct and control the defense of that indemnitee against such "suit" and agree that we can assign the same counsel to defend the insured and the indemnitee; and

f. The indemnitee:

(1) Agrees in writing to:

(a) Cooperate with us in the investigation, settlement or defense of the "suit";

(b) Immediately send us copies of any demands, notices, summonses or legal papers received in connection with the "suit";

(c) Notify any other insurer whose coverage is available to the indemnitee; and

(d) Cooperate with us with respect to coordinating other applicable insurance available to the indemnitee; and

(2) Provides us with written authorization to:

(a) Obtain records and other information related to the "suit"; and

(b) Conduct and control the defense of the indemnitee in such "suit".

So long as the above conditions are met, attorneys' fees incurred by us in the defense of that indemnitee, necessary litigation expenses incurred by us and necessary litigation expenses incurred by the indemnitee at our request will be paid as Supplementary Payments. Notwithstanding the provisions of Paragraph **2.b.(2)** of Section **I** – Coverage **A** – Bodily Injury And Property Damage Liability, such payments will not be deemed to be damages for "bodily injury" and "property damage" and will not reduce the limits of insurance.

Our obligation to defend an insured's indemnitee and to pay for attorneys' fees and necessary litigation expenses as Supplementary Payments ends when we have used up the applicable limit of insurance in the payment of judgments or settlements or the conditions set forth above, or the terms of the agreement described in Paragraph **f.** above, are no longer met.

SECTION II – WHO IS AN INSURED

1. If you are designated in the Declarations as:

a. An individual, you and your spouse are insureds, but only with respect to the conduct of a business of which you are the sole owner.

b. A partnership or joint venture, you are an insured. Your members, your partners, and their spouses are also insureds, but only with respect to the conduct of your business.

c. A limited liability company, you are an insured. Your members are also insureds, but only with respect to the conduct of your business. Your managers are insureds, but only with respect to their duties as your managers.

d. An organization other than a partnership, joint venture or limited liability company, you are an insured. Your "executive officers" and directors are insureds, but only with respect to their duties as your officers or directors. Your stockholders are also insureds, but only with respect to their liability as stockholders.

e. A trust, you are an insured. Your trustees are also insureds, but only with respect to their duties as trustees.

© Insurance Services Office, Inc., 2012

2. Each of the following is also an insured:
   a. Your "volunteer workers" only while performing duties related to the conduct of your business, or your "employees", other than either your "executive officers" (if you are an organization other than a partnership, joint venture or limited liability company) or your managers (if you are a limited liability company), but only for acts within the scope of their employment by you or while performing duties related to the conduct of your business. However, none of these "employees" or "volunteer workers" are insureds for:
      (1) "Bodily injury" or "personal and advertising injury":
         (a) To you, to your partners or members (if you are a partnership or joint venture), to your members (if you are a limited liability company), to a co-"employee" while in the course of his or her employment or performing duties related to the conduct of your business, or to your other "volunteer workers" while performing duties related to the conduct of your business;
         (b) To the spouse, child, parent, brother or sister of that co-"employee" or "volunteer worker" as a consequence of Paragraph **(1)(a)** above;
         (c) For which there is any obligation to share damages with or repay someone else who must pay damages because of the injury described in Paragraph **(1)(a)** or **(b)** above; or
         (d) Arising out of his or her providing or failing to provide professional health care services.
      (2) "Property damage" to property:
         (a) Owned, occupied or used by;
         (b) Rented to, in the care, custody or control of, or over which physical control is being exercised for any purpose by;

      you, any of your "employees", "volunteer workers", any partner or member (if you are a partnership or joint venture), or any member (if you are a limited liability company).
   b. Any person (other than your "employee" or "volunteer worker"), or any organization while acting as your real estate manager.
   c. Any person or organization having proper temporary custody of your property if you die, but only:
      (1) With respect to liability arising out of the maintenance or use of that property; and
      (2) Until your legal representative has been appointed.
   d. Your legal representative if you die, but only with respect to duties as such. That representative will have all your rights and duties under this Coverage Part.
3. Any organization you newly acquire or form, other than a partnership, joint venture or limited liability company, and over which you maintain ownership or majority interest, will qualify as a Named Insured if there is no other similar insurance available to that organization. However:
   a. Coverage under this provision is afforded only until the 90th day after you acquire or form the organization or the end of the policy period, whichever is earlier;
   b. Coverage **A** does not apply to "bodily injury" or "property damage" that occurred before you acquired or formed the organization; and
   c. Coverage **B** does not apply to "personal and advertising injury" arising out of an offense committed before you acquired or formed the organization.

No person or organization is an insured with respect to the conduct of any current or past partnership, joint venture or limited liability company that is not shown as a Named Insured in the Declarations.

SECTION III – LIMITS OF INSURANCE

1. The Limits of Insurance shown in the Declarations and the rules below fix the most we will pay regardless of the number of:
   a. Insureds;
   b. Claims made or "suits" brought; or
   c. Persons or organizations making claims or bringing "suits".
2. The General Aggregate Limit is the most we will pay for the sum of:
   a. Medical expenses under Coverage **C;**
   b. Damages under Coverage **A,** except damages because of "bodily injury" or "property damage" included in the "products-completed operations hazard"; and
   c. Damages under Coverage **B.**

© Insurance Services Office, Inc., 2012

3. The Products-Completed Operations Aggregate Limit is the most we will pay under Coverage **A** for damages because of "bodily injury" and "property damage" included in the "products-completed operations hazard".
4. Subject to Paragraph **2.** above, the Personal And Advertising Injury Limit is the most we will pay under Coverage **B** for the sum of all damages because of all "personal and advertising injury" sustained by any one person or organization.
5. Subject to Paragraph **2.** or **3.** above, whichever applies, the Each Occurrence Limit is the most we will pay for the sum of:
   a. Damages under Coverage **A;** and
   b. Medical expenses under Coverage **C**

   because of all "bodily injury" and "property damage" arising out of any one "occurrence".
6. Subject to Paragraph **5.** above, the Damage To Premises Rented To You Limit is the most we will pay under Coverage **A** for damages because of "property damage" to any one premises, while rented to you, or in the case of damage by fire, while rented to you or temporarily occupied by you with permission of the owner.
7. Subject to Paragraph **5.** above, the Medical Expense Limit is the most we will pay under Coverage **C** for all medical expenses because of "bodily injury" sustained by any one person.

The Limits of Insurance of this Coverage Part apply separately to each consecutive annual period and to any remaining period of less than 12 months, starting with the beginning of the policy period shown in the Declarations, unless the policy period is extended after issuance for an additional period of less than 12 months. In that case, the additional period will be deemed part of the last preceding period for purposes of determining the Limits of Insurance.

SECTION IV – COMMERCIAL GENERAL LIABILITY CONDITIONS

1. **Bankruptcy**

   Bankruptcy or insolvency of the insured or of the insured's estate will not relieve us of our obligations under this Coverage Part.
2. **Duties In The Event Of Occurrence, Offense, Claim Or Suit**
   a. You must see to it that we are notified as soon as practicable of an "occurrence" or an offense which may result in a claim. To the extent possible, notice should include:
      (1) How, when and where the "occurrence" or offense took place;
      (2) The names and addresses of any injured persons and witnesses; and
      (3) The nature and location of any injury or damage arising out of the "occurrence" or offense.
   b. If a claim is made or "suit" is brought against any insured, you must:
      (1) Immediately record the specifics of the claim or "suit" and the date received; and
      (2) Notify us as soon as practicable.

      You must see to it that we receive written notice of the claim or "suit" as soon as practicable.
   c. You and any other involved insured must:
      (1) Immediately send us copies of any demands, notices, summonses or legal papers received in connection with the claim or "suit";
      (2) Authorize us to obtain records and other information;
      (3) Cooperate with us in the investigation or settlement of the claim or defense against the "suit"; and
      (4) Assist us, upon our request, in the enforcement of any right against any person or organization which may be liable to the insured because of injury or damage to which this insurance may also apply.
   d. No insured will, except at that insured's own cost, voluntarily make a payment, assume any obligation, or incur any expense, other than for first aid, without our consent.
3. **Legal Action Against Us**

   No person or organization has a right under this Coverage Part:
   a. To join us as a party or otherwise bring us into a "suit" asking for damages from an insured; or
   b. To sue us on this Coverage Part unless all of its terms have been fully complied with.

   A person or organization may sue us to recover on an agreed settlement or on a final judgment against an insured; but we will not be liable for damages that are not payable under the terms of this Coverage Part or that are in excess of the applicable limit of insurance. An agreed settlement means a settlement and release of liability signed by us, the insured and the claimant or the claimant's legal representative.

 © Insurance Services Office, Inc., 2012

4. Other Insurance

If other valid and collectible insurance is available to the insured for a loss we cover under Coverages **A** or **B** of this Coverage Part, our obligations are limited as follows:

a. Primary Insurance

This insurance is primary except when Paragraph **b.** below applies. If this insurance is primary, our obligations are not affected unless any of the other insurance is also primary. Then, we will share with all that other insurance by the method described in Paragraph **c.** below.

b. Excess Insurance

(1) This insurance is excess over:

(a) Any of the other insurance, whether primary, excess, contingent or on any other basis:

(i) That is Fire, Extended Coverage, Builder's Risk, Installation Risk or similar coverage for "your work";

(ii) That is Fire insurance for premises rented to you or temporarily occupied by you with permission of the owner;

(iii) That is insurance purchased by you to cover your liability as a tenant for "property damage" to premises rented to you or temporarily occupied by you with permission of the owner; or

(iv) If the loss arises out of the maintenance or use of aircraft, "autos" or watercraft to the extent not subject to Exclusion **g.** of Section **I** – Coverage **A** – Bodily Injury And Property Damage Liability.

(b) Any other primary insurance available to you covering liability for damages arising out of the premises or operations, or the products and completed operations, for which you have been added as an additional insured.

(2) When this insurance is excess, we will have no duty under Coverages **A** or **B** to defend the insured against any "suit" if any other insurer has a duty to defend the insured against that "suit". If no other insurer defends, we will undertake to do so, but we will be entitled to the insured's rights against all those other insurers.

(3) When this insurance is excess over other insurance, we will pay only our share of the amount of the loss, if any, that exceeds the sum of:

(a) The total amount that all such other insurance would pay for the loss in the absence of this insurance; and

(b) The total of all deductible and self-insured amounts under all that other insurance.

(4) We will share the remaining loss, if any, with any other insurance that is not described in this Excess Insurance provision and was not bought specifically to apply in excess of the Limits of Insurance shown in the Declarations of this Coverage Part.

c. Method Of Sharing

If all of the other insurance permits contribution by equal shares, we will follow this method also. Under this approach each insurer contributes equal amounts until it has paid its applicable limit of insurance or none of the loss remains, whichever comes first.

If any of the other insurance does not permit contribution by equal shares, we will contribute by limits. Under this method, each insurer's share is based on the ratio of its applicable limit of insurance to the total applicable limits of insurance of all insurers.

5. Premium Audit

a. We will compute all premiums for this Coverage Part in accordance with our rules and rates.

b. Premium shown in this Coverage Part as advance premium is a deposit premium only. At the close of each audit period we will compute the earned premium for that period and send notice to the first Named Insured. The due date for audit and retrospective premiums is the date shown as the due date on the bill. If the sum of the advance and audit premiums paid for the policy period is greater than the earned premium, we will return the excess to the first Named Insured.

c. The first Named Insured must keep records of the information we need for premium computation, and send us copies at such times as we may request.

6. Representations

By accepting this policy, you agree:

a. The statements in the Declarations are accurate and complete;

© Insurance Services Office, Inc., 2012

b. Those statements are based upon representations you made to us; and

c. We have issued this policy in reliance upon your representations.

7. **Separation Of Insureds**

Except with respect to the Limits of Insurance, and any rights or duties specifically assigned in this Coverage Part to the first Named Insured, this insurance applies:

a. As if each Named Insured were the only Named Insured; and

b. Separately to each insured against whom claim is made or "suit" is brought.

8. **Transfer Of Rights Of Recovery Against Others To Us**

If the insured has rights to recover all or part of any payment we have made under this Coverage Part, those rights are transferred to us. The insured must do nothing after loss to impair them. At our request, the insured will bring "suit" or transfer those rights to us and help us enforce them.

9. **When We Do Not Renew**

If we decide not to renew this Coverage Part, we will mail or deliver to the first Named Insured shown in the Declarations written notice of the nonrenewal not less than 30 days before the expiration date.

If notice is mailed, proof of mailing will be sufficient proof of notice.

SECTION V – DEFINITIONS

1. "Advertisement" means a notice that is broadcast or published to the general public or specific market segments about your goods, products or services for the purpose of attracting customers or supporters. For the purposes of this definition:

a. Notices that are published include material placed on the Internet or on similar electronic means of communication; and

b. Regarding web sites, only that part of a web site that is about your goods, products or services for the purposes of attracting customers or supporters is considered an advertisement.

2. "Auto" means:

a. A land motor vehicle, trailer or semitrailer designed for travel on public roads, including any attached machinery or equipment; or

b. Any other land vehicle that is subject to a compulsory or financial responsibility law or other motor vehicle insurance law where it is licensed or principally garaged.

However, "auto" does not include "mobile equipment".

3. "Bodily injury" means bodily injury, sickness or disease sustained by a person, including death resulting from any of these at any time.

4. "Coverage territory" means:

a. The United States of America (including its territories and possessions), Puerto Rico and Canada;

b. International waters or airspace, but only if the injury or damage occurs in the course of travel or transportation between any places included in Paragraph **a.** above; or

c. All other parts of the world if the injury or damage arises out of:

(1) Goods or products made or sold by you in the territory described in Paragraph **a.** above;

(2) The activities of a person whose home is in the territory described in Paragraph **a.** above, but is away for a short time on your business; or

(3) "Personal and advertising injury" offenses that take place through the Internet or similar electronic means of communication;

provided the insured's responsibility to pay damages is determined in a "suit" on the merits, in the territory described in Paragraph **a.** above or in a settlement we agree to.

5. "Employee" includes a "leased worker". "Employee" does not include a "temporary worker".

6. "Executive officer" means a person holding any of the officer positions created by your charter, constitution, bylaws or any other similar governing document.

7. "Hostile fire" means one which becomes uncontrollable or breaks out from where it was intended to be.

8. "Impaired property" means tangible property, other than "your product" or "your work", that cannot be used or is less useful because:

a. It incorporates "your product" or "your work" that is known or thought to be defective, deficient, inadequate or dangerous; or

b. You have failed to fulfill the terms of a contract or agreement;

if such property can be restored to use by the repair, replacement, adjustment or removal of "your product" or "your work" or your fulfilling the terms of the contract or agreement.

© Insurance Services Office, Inc., 2012

9. "Insured contract" means:
   a. A contract for a lease of premises. However, that portion of the contract for a lease of premises that indemnifies any person or organization for damage by fire to premises while rented to you or temporarily occupied by you with permission of the owner is not an "insured contract";
   b. A sidetrack agreement;
   c. Any easement or license agreement, except in connection with construction or demolition operations on or within 50 feet of a railroad;
   d. An obligation, as required by ordinance, to indemnify a municipality, except in connection with work for a municipality;
   e. An elevator maintenance agreement;
   f. That part of any other contract or agreement pertaining to your business (including an indemnification of a municipality in connection with work performed for a municipality) under which you assume the tort liability of another party to pay for "bodily injury" or "property damage" to a third person or organization. Tort liability means a liability that would be imposed by law in the absence of any contract or agreement.

      Paragraph **f.** does not include that part of any contract or agreement:
      (1) That indemnifies a railroad for "bodily injury" or "property damage" arising out of construction or demolition operations, within 50 feet of any railroad property and affecting any railroad bridge or trestle, tracks, road-beds, tunnel, underpass or crossing;
      (2) That indemnifies an architect, engineer or surveyor for injury or damage arising out of:
         (a) Preparing, approving, or failing to prepare or approve, maps, shop drawings, opinions, reports, surveys, field orders, change orders or drawings and specifications; or
         (b) Giving directions or instructions, or failing to give them, if that is the primary cause of the injury or damage; or
      (3) Under which the insured, if an architect, engineer or surveyor, assumes liability for an injury or damage arising out of the insured's rendering or failure to render professional services, including those listed in **(2)** above and supervisory, inspection, architectural or engineering activities.

10. "Leased worker" means a person leased to you by a labor leasing firm under an agreement between you and the labor leasing firm, to perform duties related to the conduct of your business. "Leased worker" does not include a "temporary worker".
11. "Loading or unloading" means the handling of property:
   a. After it is moved from the place where it is accepted for movement into or onto an aircraft, watercraft or "auto";
   b. While it is in or on an aircraft, watercraft or "auto"; or
   c. While it is being moved from an aircraft, watercraft or "auto" to the place where it is finally delivered;

   but "loading or unloading" does not include the movement of property by means of a mechanical device, other than a hand truck, that is not attached to the aircraft, watercraft or "auto".
12. "Mobile equipment" means any of the following types of land vehicles, including any attached machinery or equipment:
   a. Bulldozers, farm machinery, forklifts and other vehicles designed for use principally off public roads;
   b. Vehicles maintained for use solely on or next to premises you own or rent;
   c. Vehicles that travel on crawler treads;
   d. Vehicles, whether self-propelled or not, maintained primarily to provide mobility to permanently mounted:
      (1) Power cranes, shovels, loaders, diggers or drills; or
      (2) Road construction or resurfacing equipment such as graders, scrapers or rollers;
   e. Vehicles not described in Paragraph **a., b., c.** or **d.** above that are not self-propelled and are maintained primarily to provide mobility to permanently attached equipment of the following types:
      (1) Air compressors, pumps and generators, including spraying, welding, building cleaning, geophysical exploration, lighting and well servicing equipment; or
      (2) Cherry pickers and similar devices used to raise or lower workers;
   f. Vehicles not described in Paragraph **a., b., c.** or **d.** above maintained primarily for purposes other than the transportation of persons or cargo.

© Insurance Services Office, Inc., 2012

However, self-propelled vehicles with the following types of permanently attached equipment are not "mobile equipment" but will be considered "autos":

(1) Equipment designed primarily for:

(a) Snow removal;

(b) Road maintenance, but not construction or resurfacing; or

(c) Street cleaning;

(2) Cherry pickers and similar devices mounted on automobile or truck chassis and used to raise or lower workers; and

(3) Air compressors, pumps and generators, including spraying, welding, building cleaning, geophysical exploration, lighting and well servicing equipment.

However, "mobile equipment" does not include any land vehicles that are subject to a compulsory or financial responsibility law or other motor vehicle insurance law where it is licensed or principally garaged. Land vehicles subject to a compulsory or financial responsibility law or other motor vehicle insurance law are considered "autos".

13. "Occurrence" means an accident, including continuous or repeated exposure to substantially the same general harmful conditions.

14. "Personal and advertising injury" means injury, including consequential "bodily injury", arising out of one or more of the following offenses:

a. False arrest, detention or imprisonment;

b. Malicious prosecution;

c. The wrongful eviction from, wrongful entry into, or invasion of the right of private occupancy of a room, dwelling or premises that a person occupies, committed by or on behalf of its owner, landlord or lessor;

d. Oral or written publication, in any manner, of material that slanders or libels a person or organization or disparages a person's or organization's goods, products or services;

e. Oral or written publication, in any manner, of material that violates a person's right of privacy;

f. The use of another's advertising idea in your "advertisement"; or

g. Infringing upon another's copyright, trade dress or slogan in your "advertisement".

15. "Pollutants" mean any solid, liquid, gaseous or thermal irritant or contaminant, including smoke, vapor, soot, fumes, acids, alkalis, chemicals and waste. Waste includes materials to be recycled, reconditioned or reclaimed.

16. "Products-completed operations hazard":

a. Includes all "bodily injury" and "property damage" occurring away from premises you own or rent and arising out of "your product" or "your work" except:

(1) Products that are still in your physical possession; or

(2) Work that has not yet been completed or abandoned. However, "your work" will be deemed completed at the earliest of the following times:

(a) When all of the work called for in your contract has been completed.

(b) When all of the work to be done at the job site has been completed if your contract calls for work at more than one job site.

(c) When that part of the work done at a job site has been put to its intended use by any person or organization other than another contractor or subcontractor working on the same project.

Work that may need service, maintenance, correction, repair or replacement, but which is otherwise complete, will be treated as completed.

b. Does not include "bodily injury" or "property damage" arising out of:

(1) The transportation of property, unless the injury or damage arises out of a condition in or on a vehicle not owned or operated by you, and that condition was created by the "loading or unloading" of that vehicle by any insured;

(2) The existence of tools, uninstalled equipment or abandoned or unused materials; or

(3) Products or operations for which the classification, listed in the Declarations or in a policy Schedule, states that products-completed operations are subject to the General Aggregate Limit.

17. "Property damage" means:

a. Physical injury to tangible property, including all resulting loss of use of that property. All such loss of use shall be deemed to occur at the time of the physical injury that caused it; or

b. Loss of use of tangible property that is not physically injured. All such loss of use shall be deemed to occur at the time of the "occurrence" that caused it.

For the purposes of this insurance, electronic data is not tangible property.

© Insurance Services Office, Inc., 2012

Policy Number
GLO 0183287-00

ENDORSEMENT

ZURICH AMERICAN INSURANCE COMPANY

Named Insured THE BOARD OF REGENTS OF THE

Effective Date: 08-01-17
12:01 A.M., Standard Time

Agent Name MARSH USA INC

Agent No. 36140-000

NAMED INSURED - OCIP

NAMED INSURED - OWNER CONTROLLED INSURANCE PROGRAM

THIS ENDORSEMENT CHANGES THE POLICY. PLEASE READ IT CAREFULLY.
THIS ENDORSEMENT MODIFIES INSURANCE PROVIDED UNDER THE:
COMMERCIAL GENERAL LIABILITY COVERAGE PART

A. THE FOLLOWING IS ADDED TO SECTION II - WHO IS AN INSURED:

1. SUBJECT TO PARAGRAPH 2. BELOW, A CONTRACTOR OF ANY TIER WILL QUALIFY AS A NAMED INSURED, IF SUCH CONTRACTOR:

A. IS ENROLLED IN THE OWNER CONTROLLED INSURANCE PROGRAM FOR WHICH THIS POLICY IS PROVIDED; AND

B. PERFORMS OPERATIONS AT A "DESIGNATED PROJECT".

2. UNLESS ADDED BY SEPARATE ENDORSEMENT, THE FOLLOWING ARE NOT AN INSURED UNDER THIS POLICY:

A. VENDORS, SUPPLIERS, MATERIAL DEALERS, ABATEMENT CONTRACTORS, BLASTING CONTRACTORS, DELIVERY PERSONS, HAULERS, HAZARDOUS WASTE REMOVAL CONTRACTORS;

B. ANY PERSON OR ORGANIZATION THAT MANUFACTURES OR FABRICATES PRODUCTS OR COMPONENTS OUTSIDE THE "DESIGNATED PROJECT" THAT DOES NOT ALSO INSTALL THE PRODUCT OR COMPONENT AT THE "DESIGNATED PROJECT"; OR

C. OTHER THAN THE PERSONS OR ORGANIZATIONS REFERENCED IN 3. BELOW, ANY CONTRACTOR OR OTHER PERSON OR ORGANIZATION THAT DOES NOT HAVE DEDICATED PAYROLL FOR EMPLOYEES ON-SITE AT THE "DESIGNATED PROJECT".

3. THE PERSON OR ORGANIZATION SHOWN IN THE DECLARATIONS OF THIS POLICY AND THEIR SUBSIDIARIES, ASSOCIATED AND AFFILIATED COMPANIES, SUCCESSORS, OR ASSIGNS, AS NOW EXIST OR MAY HEREAFTER BE ACQUIRED OR FORMED, AND ANY CORPORATION OR OTHER BUSINESS ORGANIZATION WHICH THE PERSON OR ORGANIZATION SHOWN IN THE DECLARATIONS OF THIS POLICY OWNS, OPERATES OR CONTROLS, INCLUDING THE INTEREST AS SUCCESSOR TO ANY CORPORATION OR OTHER BUSINESS ORGANIZATION ACQUIRED, MERGED, OR TRANSFORMED INTO ANY OF THE FOREGOING, AND OTHER INTERESTS AS ARE NOW OR HEREAFTER RELATED TO THE PERSON OR ORGANIZATION SHOWN IN THE DECLARATIONS OF THIS POLICY ARE NOT INSURED FOR "BODILY INJURY", "PROPERTY DAMAGE" OR "PERSONAL AND ADVERTISING INJURY" ARISING FROM THEIR OWN ACTS OR OMISSIONS. SUCH PERSONS OR ORGANIZATIONS ARE NAMED INSUREDS ONLY FOR LIABILITY ARISING FROM:

A. THE ACTS OR OMISSIONS OF THE NAMED INSUREDS DESCRIBED IN PARAGRAPH 1. ABOVE; OR

B. THE ACTS OF "EMPLOYEES" AS INSUREDS AS PROVIDED IN PARAGRAPH B. BELOW, BUT ONLY WHILE THOSE "EMPLOYEES" ARE PERFORMING DUTIES SOLELY RELATED TO CONSTRUCTION ACTIVITIES AT THE "DESIGNATED PROJECT".

B. SOLELY WITH RESPECT TO THE PERSON OR ORGANIZATION DESIGNATED IN

Policy Number
GLO 0183287-00

ENDORSEMENT

ZURICH AMERICAN INSURANCE COMPANY

Named Insured THE BOARD OF REGENTS OF THE

Effective Date: 08-01-17
12:01 A.M., Standard Time

Agent Name MARSH USA INC

Agent No. 36140-000

NAMED INSURED - OCIP

PARAGRAPH A.3. OF THIS ENDORSEMENT, PARAGRAPH 2.A. OF SECTION II - WHO IS AN INSURED IS REPLACED BY THE FOLLOWING:

2. EACH OF THE FOLLOWING IS ALSO AN INSURED:

A. YOUR "EMPLOYEES", OTHER THAN EITHER YOUR "EXECUTIVE OFFICERS" (IF YOU ARE AN ORGANIZATION OTHER THAN A PARTNERSHIP, JOINT VENTURE OR LIMITED LIABILITY COMPANY) OR YOUR MANAGERS (IF YOU ARE A LIMITED LIABILITY COMPANY), BUT ONLY FOR ACTS WITHIN THE SCOPE OF THEIR EMPLOYMENT BY YOU WHILE PERFORMING DUTIES SOLELY RELATED TO CONSTRUCTION ACTIVITIES AT THE "DESIGNATED PROJECT". HOWEVER, NONE OF THESE "EMPLOYEES" ARE INSUREDS FOR:

(1) "BODILY INJURY" OR "PERSONAL AND ADVERTISING INJURY":

(A) TO YOU, TO YOUR PARTNERS OR MEMBERS (IF YOU ARE A PARTNERSHIP OR JOINT VENTURE), TO YOUR MEMBERS (IF YOU ARE A LIMITED LIABILITY COMPANY), TO A CO-"EMPLOYEE" WHILE IN THE COURSE OF HIS OR HER EMPLOYMENT OR PERFORMING DUTIES RELATED TO THE CONDUCT OF YOUR BUSINESS;

(B) TO THE SPOUSE, CHILD, PARENT, BROTHER OR SISTER OF THAT CO-"EMPLOYEE" AS A CONSEQUENCE OF PARAGRAPH (1)(A) ABOVE;

(C) FOR WHICH THERE IS ANY OBLIGATION TO SHARE DAMAGES WITH OR REPAY SOMEONE ELSE WHO MUST PAY DAMAGES BECAUSE OF THE INJURY DESCRIBED IN PARAGRAPHS (1)(A) OR (B) ABOVE; OR

(D) ARISING OUT OF HIS OR HER PROVIDING OR FAILING TO PROVIDE PROFESSIONAL HEALTH CARE SERVICES.

(2) "PROPERTY DAMAGE" TO PROPERTY:

(A) OWNED, OCCUPIED OR USED BY;

(B) RENTED TO, IN THE CARE, CUSTODY OR CONTROL OF, OR OVER WHICH PHYSICAL CONTROL IS BEING EXERCISED FOR ANY PURPOSE BY;
YOU, ANY OF YOUR "EMPLOYEES", ANY PARTNER OR MEMBER (IF YOU ARE A PARTNERSHIP OR JOINT VENTURE), OR ANY MEMBER (IF YOU ARE A LIMITED LIABILITY COMPANY).

C. FOR PURPOSES OF THIS ENDORSEMENT, "DESIGNATED PROJECT" IS DEFINED IN THE LIMITATION OF COVERAGE TO DESIGNATED PROJECT(S) ENDORSEMENT (U-GL-1305) ATTACHED TO THIS COVERAGE PART.

ALL OTHER TERMS AND CONDITIONS OF THIS POLICY REMAIN UNCHANGED.

Policy Number
GLO 0183287-00

ENDORSEMENT

ZURICH AMERICAN INSURANCE COMPANY

Named Insured THE BOARD OF REGENTS OF THE

Effective Date: 08-01-17
12:01 A.M., Standard Time

Agent Name MARSH USA INC

Agent No. 36140-000

EXTENDED ONGOING OPERATIONS COVERAGE

EXTENDED ONGOING OPERATIONS COVERAGE - REPAIR WORK

THIS ENDORSEMENT CHANGES THE POLICY. PLEASE READ IT CAREFULLY.
THIS ENDORSEMENT MODIFIES INSURANCE PROVIDED UNDER THE:
COMMERCIAL GENERAL LIABILITY COVERAGE PART

THE INTRODUCTION TO THIS COVERAGE PART AND SECTION II. WHO IS AN INSURED IS AMENDED TO INCLUDE THE FOLLOWING ADDITIONAL PROVISION:
NO PERSON OR ORGANIZATION WILL QUALIFY AS A NAMED INSURED UNDER THIS COVERAGE PART IF THAT PERSON(S) OR ORGANIZATION(S) HAS ANY OWNERSHIP INTEREST IN THE "DESIGNATED PROJECT" OR THE LOCATION WHERE "REPAIR WORK" IS BEING PERFORMED.

A. THE INSURANCE PROVIDED UNDER COVERAGE A. OF THIS COVERAGE PART AS RESPECTS THE "DESIGNATED PROJECT" IS EXTENDED TO APPLY TO ONGOING "REPAIR WORK" PERFORMED SUBSEQUENT TO THE "PROJECT COMPLETION DATE". OUR COVERAGE FOR ONGOING "REPAIR WORK" ONLY BEGINS ON THE "PROJECT COMPLETION DATE" OF THE "DESIGNATED PROJECT" AND EXPIRES 2 YEARS AFTER THE "PROJECT COMPLETION DATE". IF NO TIME PERIOD IS SHOWN ABOVE, THEN THE COVERAGE PROVIDED BY THIS ENDORSEMENT EXPIRES 2 (TWO) YEARS AFTER THE "PROJECT COMPLETION DATE".

B. FOR PURPOSES OF THE COVERAGE PROVIDED BY THIS ENDORSEMENT, THE FOLLOWING CHANGES APPLY AS RESPECTS SECTION I. COVERAGES, COVERAGE A. BODILY INJURY AND PROPERTY DAMAGE LIABILITY:

1. INSURING AGREEMENT B. (1) AND (2) ARE REPLACED WITH THE FOLLOWING:

B. THIS INSURANCE APPLIES TO "BODILY INJURY" AND "PROPERTY DAMAGE" ONLY IF:

(1) THE "BODILY INJURY" OR "PROPERTY DAMAGE" IS CAUSED SOLELY BY AN "OCCURRENCE" THAT ARISES OUT OF "REPAIR WORK" BEING PERFORMED BY OR ON BEHALF OF A NAMED INSURED AT THE "DESIGNATED PROJECT" IN THE "COVERAGE TERRITORY"; AND

(2) THE "BODILY INJURY" OR "PROPERTY DAMAGE" OCCURS WITHIN THE PERIOD IDENTIFIED IN PARAGRAPH A ABOVE.

2. EXCLUSIONS IS AMENDED TO INCLUDE THE FOLLOWING ADDITIONAL EXCLUSION:

THIS INSURANCE DOES NOT APPLY TO "BODILY INJURY" OR "PROPERTY DAMAGE" INCLUDED WITHIN THE "PRODUCTS-COMPLETED OPERATIONS HAZARD."

3. THE FOLLOWING PARAGRAPH IS ADDED AFTER THE LAST PARAGRAPH UNDER SECTION III LIMITS OF INSURANCE:

NO ADDITIONAL LIMITS OF INSURANCE ARE PROVIDED FOR EXTENDED ONGOING OPERATIONS COVERAGE - REPAIR WORK. THE COVERAGE A. LIMITS OF INSURANCE APPLICABLE TO THIS COVERAGE ARE THE LIMITS APPLYING TO THE LAST ANNUAL PERIOD OF THIS POLICY THESE EACH OCCURRENCE AND GENERAL AGGREGATE LIMITS APPLY TO ALL COVERED "REPAIR WORK" DAMAGES INCURRED

Policy Number
GLO 0183287-00

ENDORSEMENT

ZURICH AMERICAN INSURANCE COMPANY

Named Insured THE BOARD OF REGENTS OF THE

Effective Date: 08-01-17
12:01 A.M., Standard Time

Agent Name MARSH USA INC

Agent No. 36140-000

EXTENDED ONGOING OPERATIONS COVERAGE

DURING THE LAST ANNUAL PERIOD OF THE POLICY AND THE ENTIRE EXTENDED ONGOING OPERATIONS COVERAGE - REPAIR WORK PERIOD (AS DESIGNATED IN PARAGRAPH A. OF THIS ENDORSEMENT) AS WELL AS TO ANY OTHER COVERED DAMAGES, OTHER THAN "REPAIR WORK" DAMAGES, SUBJECT TO THESE LIMITS THAT MAY ALSO BE INCURRED DURING THE LAST REGULAR ANNUAL PERIOD OF THE POLICY.

4. SECTION IV - COMMERCIAL GENERAL LIABILITY CONDITIONS IS AMENDED AS FOLLOWS:

A. THE FOLLOWING CONDITION IS ADDED:

THE COVERAGE PROVIDED BY THIS ENDORSEMENT SHALL NOT TAKE EFFECT IF THIS POLICY IS CANCELED FOR ANY REASON.

B. CONDITION 4. OTHER INSURANCE, B. EXCESS INSURANCE, PARAGRAPH (1) IS AMENDED TO INCLUDE:

(E) ANY OTHER PRIMARY INSURANCE AVAILABLE TO YOU COVERING LIABILITY FOR DAMAGES ARISING OUT OF THE "REPAIR WORK", FOR WHICH YOU HAVE BEEN ADDED AS AN ADDITIONAL INSURED BY ATTACHMENT OF AN ENDORSEMENT TO ANY OTHER POLICY PROVIDING COVERAGE FOR THE SAME "OCCURRENCE", CLAIM OR "SUIT".

5. THE FOLLOWING ADDITIONAL DEFINITIONS ARE ADDED TO SECTION V. DEFINITIONS:

A. "REPAIR WORK" MEANS THE ONGOING PERIODIC INSPECTIONS, CORRECTIONS, REPAIR OR REPLACEMENT WORK AT THE "DESIGNATED PROJECT", PURSUANT TO OBLIGATIONS YOU HAVE ASSUMED UNDER THE CONSTRUCTION AGREEMENT ENTERED INTO DURING THE POLICY TERM AND FOR WHICH COMPENSATION HAS BEEN PAID TO YOU AS A NAMED INSURED UNDER THE CONTROLLED INSURANCE PROGRAM COVERED BY THIS POLICY.

B. "PROJECT COMPLETION DATE" MEANS THE EARLIEST DATE WITHIN OUR POLICY PERIOD OF THE FOLLOWING:

(1) THE DATE OF FINAL WRITTEN ACCEPTANCE OF THE "DESIGNATED PROJECT" BY THE OWNER; OR

(2) WHEN ALL OF THE WORK CALLED FOR IN YOUR CONTRACT HAS BEEN COMPLETED AND THE PARTIES TO THE CONTRACT AGREE THAT THE "PROJECT COMPLETION DATE" HAS BEEN ATTAINED; OR

(3) WHEN THAT PART OF THE WORK DONE AT A "DESIGNATED PROJECT" STRUCTURE, SITE OR LOCATION HAS BEEN ACCEPTED BY THE UNIVERSITY OF TEXAS SYSTEM OFFICE OF FACILITIES, PLANNING AND CONSTRUCTION AND HAS BEEN PUT TO ITS INTENDED USE OR IS READY FOR ITS INTENDED USE BY THE UNIVERSITY OF TEXAS OR ANY PERSON OR ORGANIZATION OTHER THAN ANOTHER CONTRACTOR OR SUBCONTRACTOR WORKING ON THE SAME "DESIGNATED PROJECT"; OR

(4) WHEN ALL OF THE WORK TO BE DONE AT THE "DESIGNATED PROJECT" STRUCTURE, SITE OR LOCATION HAS BEEN ACCEPTED BY THE UNIVERSITY OF

Policy Number
GLO 0183287-00

ENDORSEMENT

ZURICH AMERICAN INSURANCE COMPANY

Named Insured THE BOARD OF REGENTS OF THE

Effective Date: 08-01-17
12:01 A.M., Standard Time

Agent Name MARSH USA INC

Agent No. 36140-000

EXTENDED ONGOING OPERATIONS COVERAGE

TEXAS SYSTEM OFFICE OF FACILITIES, PLANNING AND CONSTRUCTION AND IS SUBSTANTIALLY COMPLETE AND IS IN USE OR IS READY FOR ITS INTENDED USE, IF YOUR CONTRACT CALLS FOR WORK AT MORE THAN ONE STRUCTURE, SITE OR LOCATION.

ALL OTHER TERMS AND CONDITIONS OF THE POLICY, THE COMMERCIAL GENERAL LIABILITY DEDUCTIBLE ENDORSEMENT, AND ANY OTHER ENDORSEMENT TO THE POLICY REMAIN THE SAME.

Policy Number
GLO 0183287-00

ENDORSEMENT

ZURICH AMERICAN INSURANCE COMPANY

Named Insured THE BOARD OF REGENTS OF THE

Effective Date: 08-01-17
12:01 A.M., Standard Time

Agent Name MARSH USA INC

Agent No. 36140-000

NOTICE OF OCCURRENCE

THIS ENDORSEMENT MODIFIES INSURANCE PROVIDED BY THE FOLLOWING:

COMMERCIAL GENERAL LIABILITY COVERAGE PART

THE FOLLOWING IS ADDED TO SECTION IV - COMMERCIAL GENERAL LIABILITY CONDITIONS, PARAGRAPH 2 - DUTIES IN THE EVENT OF OCCURRENCE, OFFENSE, CLAIM OR SUIT:

E. IF YOU REPORT AN "OCCURRENCE", OFFENSE CLAIM OR "SUIT" TO ANOTHER INSURER AND LATER DISCOVER THAT YOU SHOULD HAVE REPORTED THE "OCCURRENCE", OFFENSE, CLAIM OR "SUIT" TO US, WE WILL NOT CONSIDER YOUR FAILURE TO REPORT THE "OCCURRENCE", OFFENSE, CLAIM OR "SUIT" EARLIER A VIOLATION OF YOUR DUTIES IN THE EVENT OF "OCCURRENCE", OFFENSE, CLAIM OR "SUIT" AS LONG AS YOU GIVE US NOTICE AS SOON AS YOU ARE AWARE THAT THE "OCCURRENCE", OFFENSE, CLAIM OR "SUIT" SHOULD HAVE BEEN REPORTED TO US.

Policy Number
GLO 0183287-00

ENDORSEMENT

ZURICH AMERICAN INSURANCE COMPANY

Named Insured THE BOARD OF REGENTS OF THE

Effective Date: 08-01-17
12:01 A.M., Standard Time

Agent Name MARSH USA INC

Agent No. 36140-000

EXTENDED COMPLETED OPERATIONS

EXTENDED COMPLETED OPERATIONS - DESIGNATED PROJECT

THIS ENDORSEMENT CHANGES THE POLICY. PLEASE READ IT CAREFULLY.
THIS ENDORSEMENT MODIFIES INSURANCE PROVIDED UNDER THE:
COMMERCIAL GENERAL LIABILITY COVERAGE PART

1. IT IS AGREED THAT FOR EACH "DESIGNATED PROJECT" IDENTIFIED IN A DESIGNATED PROJECT - DECLARATIONS ENDORSEMENT TO THIS POLICY, THE COVERAGE PROVIDED UNDER THE "PRODUCTS-COMPLETED OPERATIONS HAZARD" OF THIS POLICY SHALL BE EXTENDED FOR THE PERIOD SHOWN IN THE EXTENDED COMPLETED OPERATIONS COVERAGE PERIOD SECTION OF THE DESIGNATED PROJECT-DECLARATIONS ENDORSEMENT(S). THE EXTENDED COMPLETED OPERATIONS COVERAGE PERIOD SHALL BEGIN ON THE "PROJECT COMPLETION DATE" OF THE "DESIGNATED PROJECT".

THIS EXTENDED COMPLETED OPERATIONS COVERAGE APPLIES ONLY TO "BODILY INJURY" AND "PROPERTY DAMAGE" THAT OCCURS DURING THE EXTENDED COMPLETED OPERATION COVERAGE PERIOD AND IS CAUSED BY AN "OCCURRENCE". ALL OTHER TERMS AND CONDITIONS OF THIS POLICY AND ENDORSEMENTS APPLY TO THE EXTENDED COMPLETED OPERATIONS COVERAGE UNLESS EXPRESSLY REVISED BY ENDORSEMENT.

2. THE EXTENDED COMPLETED OPERATIONS COVERAGE AFFORDED BY THIS ENDORSEMENT SHALL NOT TAKE EFFECT IF THIS POLICY IS CANCELLED FOR ANY REASON OTHER THAN EARLY COMPLETION OF THE PROJECT.

3. FOR PURPOSES OF THIS INSURANCE, THE FOLLOWING ADDITIONAL DEFINITION APPLIES:

"PROJECT COMPLETION DATE" MEANS THE EARLIEST DATE WITHIN OUR POLICY PERIOD OF THE FOLLOWING:

(1) THE DATE OF FINAL WRITTEN ACCEPTANCE OF THE "DESIGNATED PROJECT" BY THE OWNER; OR

(2) WHEN ALL OF THE WORK CALLED FOR IN YOUR CONTRACT HAS BEEN COMPLETED AND THE PARTIES TO THE CONTRACT AGREE THAT THE "PROJECT COMPLETION DATE" HAS BEEN ATTAINED; OR

(3) WHEN THAT PART OF THE WORK DONE AT A "DESIGNATED PROJECT" STRUCTURE, SITE OR LOCATION HAS BEEN ACCEPTED BY THE UNIVERSITY OF TEXAS SYSTEM OFFICE OF FACILITIES, PLANNING AND CONSTRUCTION AND HAS BEEN PUT TO ITS INTENDED USE OR IS READY FOR ITS INTENDED USE BY ANY PERSON OR ORGANIZATION OTHER THAN ANOTHER CONTRACTOR OR SUBCONTRACTOR WORKING ON THE SAME "DESIGNATED PROJECT"; OR

(4) WHEN ALL OF THE WORK TO BE DONE AT THE "DESIGNATED PROJECT" STRUCTURE, SITE OR LOCATION HAS BEEN ACCEPTED BY THE UNIVERSITY OF TEXAS SYSTEM OFFICE OF FACILITIES, PLANNING AND CONSTRUCTION AND IS IN USE OR IS READY FOR ITS INTENDED USE, IF YOUR CONTRACT CALLS FOR

Policy Number
GLO 0183287-00

ENDORSEMENT

ZURICH AMERICAN INSURANCE COMPANY

Named Insured THE BOARD OF REGENTS OF THE

Effective Date: 08-01-17
12:01 A.M., Standard Time

Agent Name MARSH USA INC

Agent No. 36140-000

EXTENDED COMPLETED OPERATIONS

WORK AT MORE THAN ONE STRUCTURE, SITE OR LOCATION.

ALL OTHER TERMS AND CONDITIONS OF THE POLICY NOT CHANGED BY THE PROVISIONS OF THIS ENDORSEMENT CONTINUE TO APPLY AS CURRENTLY WRITTEN.

Policy Number
GLO 0183287-00

ENDORSEMENT

ZURICH AMERICAN INSURANCE COMPANY

Named Insured THE BOARD OF REGENTS OF THE

Effective Date: 08-01-17
12:01 A.M., Standard Time

Agent Name MARSH USA INC

Agent No. 36140-000

SUDDEN & ACCIDENTAL POLLUTION

THIS ENDORSEMENT CHANGES THE POLICY. PLEASE READ IT CAREFULLY.

TOTAL POLLUTION EXCLUSION WITH A BUILDING HEATING, COOLING AND DEHUMIDIFYING EQUIPMENT EXCEPTION, HOSTILE FIRE EXCEPTION, AND SHORT-TERM DISCHARGE EXCEPTION

THIS ENDORSEMENT MODIFIES INSURANCE PROVIDED UNDER THE FOLLOWING:

COMMERCIAL GENERAL LIABILITY COVERAGE PART

EXCLUSION F. UNDER PARAGRAPH 2. EXCLUSIONS OF SECTION I - COVERAGE A - BODILY INJURY AND PROPERTY DAMAGE LIABILITY IS REPLACED BY THE FOLLOWING:

THIS INSURANCE DOES NOT APPLY TO:

F. POLLUTION

(1) "BODILY INJURY" OR "PROPERTY DAMAGE" WHICH WOULD NOT HAVE OCCURRED IN WHOLE OR PART BUT FOR THE ACTUAL, ALLEGED OR THREATENED DISCHARGE, DISPERSAL, SEEPAGE, MIGRATION, RELEASE OR ESCAPE OF "POLLUTANTS" AT ANY TIME.

THIS EXCLUSION DOES NOT APPLY TO:

(A) "BODILY INJURY" IF SUSTAINED WITHIN A BUILDING WHICH IS OR WAS AT ANY TIME OWNED OR OCCUPIED BY, OR RENTED OR LOANED TO, ANY INSURED AND CAUSED BY SMOKE, FUMES, VAPOR OR SOOT PRODUCED BY OR ORIGINATING FROM EQUIPMENT THAT IS USED TO HEAT, COOL OR DEHUMIDIFY THE BUILDING, OR EQUIPMENT THAT IS USED TO HEAT WATER FOR PERSONAL USE, BY THE BUILDING'S OCCUPANTS OR THEIR GUESTS; OR

(B) "BODILY INJURY" OR "PROPERTY DAMAGE" ARISING OUT OF HEAT, SMOKE OR FUMES FROM A "HOSTILE FIRE" UNLESS THAT "HOSTILE FIRE" OCCURRED OR ORIGINATED:

(I) AT ANY PREMISES, SITE OR LOCATION WHICH IS OR WAS AT ANY TIME USED BY OR FOR ANY INSURED OR OTHERS FOR THE HANDLING, STORAGE, DISPOSAL, PROCESSING OR TREATMENT OF WASTE; OR

(II) AT ANY PREMISES, SITE OR LOCATION ON WHICH ANY INSURED OR ANY CONTRACTORS OR SUBCONTRACTORS WORKING DIRECTLY OR INDIRECTLY ON ANY INSURED'S BEHALF ARE PERFORMING OPERATIONS TO TEST FOR, MONITOR, CLEAN UP, REMOVE, CONTAIN, TREAT, DETOXIFY, NEUTRALIZE OR IN ANY WAY RESPOND TO, OR ASSESS THE EFFECTS OF, "POLLUTANTS".

(C) "BODILY INJURY" OR "PROPERTY DAMAGE" ARISING OUT OF A "SHORT-TERM DISCHARGE", AND YOU NOTIFIED US OF THE "SHORT-TERM DISCHARGE" AS SOON AS PRACTICABLE BUT NO MORE THAN SEVEN (7) DAYS AFTER ITS ENDING.

(2) ANY LOSS, COST OR EXPENSE ARISING OUT OF ANY:

(A) REQUEST, DEMAND, ORDER OR STATUTORY OR REGULATORY REQUIREMENT

Policy Number
GLO 0183287-00

ENDORSEMENT

ZURICH AMERICAN INSURANCE COMPANY

Named Insured THE BOARD OF REGENTS OF THE

Effective Date: 08-01-17
12:01 A.M., Standard Time

Agent Name MARSH USA INC

Agent No. 36140-000

SUDDEN & ACCIDENTAL POLLUTION

THAT ANY INSURED OR OTHERS TEST FOR, MONITOR, CLEAN UP, REMOVE, CONTAIN, TREAT, DETOXIFY OR NEUTRALIZE, OR IN ANY WAY RESPOND TO, OR ASSESS THE EFFECTS OF, "POLLUTANTS"; OR

(B) CLAIM OR SUIT BY OR ON BEHALF OF A GOVERN-MENTAL AUTHORITY FOR DAMAGES BECAUSE OF TESTING FOR, MONITORING, CLEANING UP, REMOVING, CONTAINING, TREATING, DETOXIFYING OR NEUTRALIZING, OR IN ANY WAY RESPONDING TO, OR ASSESSING THE EFFECTS OF, "POLLUTANTS".

(3) THE FOLLOWING IS ADDED TO THE DEFINITIONS SECTION:

(A) "SHORT-TERM DISCHARGE" MEANS A DISCHARGE, DISPERSAL, RELEASE OR ESCAPE OF A FIRE SUPPRESSION AGENT OTHER THAN WATER WHICH:

1. BEGINS DURING THE POLICY PERIOD;

2. BEGINS AT AN IDENTIFIED TIME AND PLACE;

3. ENDS, IN ITS ENTIRETY, AT AN IDENTIFIED TIME WITHIN FOUR (4) HOURS OF THE BEGINNING OF THE DISCHARGE, DISPERSAL, RELEASE OR ESCAPE OF THE FIRE SUPPRESSION AGENT, AND;

4. IS NOT A RESULT OF VANDALISM OR MALICIOUS MISCHIEF.

TO BE A "SHORT-TERM DISCHARGE", THE DISCHARGE, DISPERSAL, RELEASE OR ESCAPE OF FIRE SUPPRESSION AGENT NEED NOT BE CONTINUOUS. HOWEVER, IF THE DISCHARGE, DISPERSAL, RELEASE OR ESCAPE IS NOT CONTINUOUS, THEN ALL DISCHARGES, DISPERSALS, RELEASES OR ESCAPES OF THE SAME FIRE SUPPRESSION AGENT FROM ESSENTIALLY THE SAME SOURCE, CONSIDERED TOGETHER, MUST SATISFY PROVISIONS 1. THROUGH 4. OF THIS DEFINITION TO BE CONSIDERED A "SHORT-TERM DISCHARGE".

Unintentional Failure to Disclose Hazards

Policy No.	Eff. Date of Pol.	Exp. Date of Pol.	Eff. Date of End.	Producer	Add'l Prem.	Return Prem.
GLO 0183287 00	08/01/2017	08/01/2023		36140000	$ INCL	$

THIS ENDORSEMENT CHANGES THE POLICY. PLEASE READ IT CAREFULLY.

This endorsement modifies insurance provided under the:

Commercial General Liability Coverage Form

Any unintentional error or omission in the description of, or failure to completely describe, any premises or operations intended to be covered by this Commercial General Liability Coverage Form will not invalidate or affect coverage for those premises or operations. However, you must report such error or omission to us as soon as practicable after its discovery.

Fungi Or Bacteria Exclusion Endorsement

Policy No.	Eff. Date of Pol.	Exp. Date of Pol.	Eff. Date of End.	Producer	Add'l Prem.	Return Prem.
GLO 0183287 00	08/01/2017	08/01/2023		36140000	$ INCL	$

THIS ENDORSEMENT CHANGES THE POLICY. PLEASE READ IT CAREFULLY.

This endorsement modifies insurance provided under the:

Commercial General Liability Coverage Part

The following exclusion is added to paragraph **2. Exclusions** of **Section I. – Coverage A – Bodily Injury And Property Damage Liability** and paragraph **2. Exclusions** of **Coverage B – Personal And Advertising Injury Liability**:

2. Exclusions

This insurance does not apply to:

Fungi or Bacteria

A. "Bodily injury", "property damage" or "personal and advertising injury " caused directly or indirectly by the actual, alleged or threatened inhalation of, ingestion of, contact with, exposure to, existence of, or presence of any:

1. "Fungi"or "bacteria"; or
2. Substance, vapor or gas produced by or arising out of any "fungi" or "bacteria".

B. Loss, costs or expenses arising out of the abating, testing for, monitoring, cleaning up, removing, containing, treating, detoxifying, neutralizing, remediating or disposing of, or in any way responding to, or assessing the effects of, "fungi" or "bacteria", by any insured or by any other person or entity.

C. For the purposes of this exclusion, the following definitions are added:

1. "Fungi" means any type or form of fungus, including mold or mildew and any mycotoxins, "spores", scents or byproducts produced or released by fungi.
2. "Spores" means reproductive bodies produced by or arising out of "fungi".
3. "Bacteria" means any type or form of bacteria and any materials or substances that are produced or released by bacteria.

This exclusion does not apply to any "fungi"or "bacteria" that are, are on, or are contained in, an edible good or edible product intended for human or animal consumption.

Includes copyrighted material of Insurance Services Office, Inc. with its permission

Additional Insured – Automatic – Owners, Lessees Or Contractors

ZURICH

Policy No.	Eff. Date of Pol.	Exp. Date of Pol.	Eff. Date of End.	Producer No.	Add'l. Prem.	Return Prem.
GLO 0183287-00	08/01/2017	08/01/2023		36140000	**INCL**	

THIS ENDORSEMENT CHANGES THE POLICY. PLEASE READ IT CAREFULLY.

Named Insured: THE BOARD OF REGENTS OF THE UNIVERSITY OF TEXAS
Address (including ZIP Code):
210 W 7TH ST
AUSTIN, TX 78701
This endorsement modifies insurance provided under the:
Commercial General Liability Coverage Part

A. Section **II – Who Is An Insured** is amended to include as an additional insured any person or organization whom you are required to add as an additional insured on this policy under a written contract or written agreement. Such person or organization is an additional insured only with respect to liability for "bodily injury", "property damage" or "personal and advertising injury" caused, in whole or in part, by:

1. Your acts or omissions; or
2. The acts or omissions of those acting on your behalf,

in the performance of your ongoing operations or "your work" as included in the "products-completed operations hazard", which is the subject of the written contract or written agreement.

However, the insurance afforded to such additional insured:

1. Only applies to the extent permitted by law; and
2. Will not be broader than that which you are required by the written contract or written agreement to provide for such additional insured.

B. With respect to the insurance afforded to these additional insureds, the following additional exclusion applies:

This insurance does not apply to:

"Bodily injury", "property damage" or "personal and advertising injury" arising out of the rendering of, or failure to render, any professional architectural, engineering or surveying services including:

a. The preparing, approving or failing to prepare or approve maps, shop drawings, opinions, reports, surveys, field orders, change orders or drawings and specifications; or

b. Supervisory, inspection, architectural or engineering activities.

This exclusion applies even if the claims against any insured allege negligence or other wrongdoing in the supervision, hiring, employment, training or monitoring of others by that insured, if the "occurrence" which caused the "bodily injury" or "property damage", or the offense which caused the "personal and advertising injury", involved the rendering of or the failure to render any professional architectural, engineering or surveying services.

Includes copyrighted material of Insurance Services Office, Inc., with its permission.

C. The following is added to Paragraph **2.** Duties In The Event Of Occurrence, Offense, Claim Or Suit of Section **IV – Commercial General Liability Conditions**:

The additional insured must see to it that:

1. We are notified as soon as practicable of an "occurrence" or offense that may result in a claim;

2. We receive written notice of a claim or "suit" as soon as practicable; and

3. A request for defense and indemnity of the claim or "suit" will promptly be brought against any policy issued by another insurer under which the additional insured may be an insured in any capacity. This provision does not apply to insurance on which the additional insured is a Named Insured if the written contract or written agreement requires that this coverage be primary and non-contributory.

D. For the purposes of the coverage provided by this endorsement:

1. The following is added to the Other Insurance Condition of Section **IV – Commercial General Liability Conditions**:

Primary and Noncontributory insurance

This insurance is primary to and will not seek contribution from any other insurance available to an additional insured provided that:

a. The additional insured is a Named Insured under such other insurance; and

b. You are required by written contract or written agreement that this insurance be primary and not seek contribution from any other insurance available to the additional insured.

2. The following paragraph is added to Paragraph **4.b.** of the Other Insurance Condition of Section **IV – Commercial General Liability Conditions**:

This insurance is excess over:

Any of the other insurance, whether primary, excess, contingent or on any other basis, available to an additional insured, in which the additional insured on our policy is also covered as an additional insured on another policy providing coverage for the same "occurrence", offense, claim or "suit". This provision does not apply to any policy in which the additional insured is a Named Insured on such other policy and where our policy is required by a written contract or written agreement to provide coverage to the additional insured on a primary and non-contributory basis.

E. This endorsement does not apply to an additional insured which has been added to this policy by an endorsement showing the additional insured in a Schedule of additional insureds, and which endorsement applies specifically to that identified additional insured.

F. With respect to the insurance afforded to the additional insureds under this endorsement, the following is added to Section **III – Limits Of Insurance**:

The most we will pay on behalf of the additional insured is the amount of insurance:

1. Required by the written contract or written agreement referenced in Paragraph **A.** of this endorsement; or

2. Available under the applicable Limits of Insurance shown in the Declarations,

whichever is less.

This endorsement shall not increase the applicable Limits of Insurance shown in the Declarations.

All other terms and conditions of this policy remain unchanged.

Includes copyrighted material of Insurance Services Office, Inc., with its permission.

Limited Contractual Liability

Policy No.	Eff. Date of Pol.	Exp. Date of Pol.	Eff. Date of End.	Producer	Add'l. Prem	Return Prem.
					$	$

THIS ENDORSEMENT CHANGES THE POLICY. PLEASE READ IT CAREFULLY.

This endorsement modifies insurance provided under the:

Commercial General Liability Coverage Part

Paragraph f. of SECTION V. DEFINITION 9. "Insured contract" is deleted and replaced by the following:

f. That part of any other contract or agreement pertaining to your business (including an indemnification of a municipality in connection with work performed for a municipality) under which you assume the tort liability of another party to pay for "bodily injury" or "property damage" to a third person or organization. Tort liability means a liability that would be imposed by law in the absence of any contract or agreement.

Paragraph f. does not include that part of any contract or agreement:

(1) That indemnifies a railroad for "bodily injury" or "property damage" arising out of construction or demolition operations, within 50 feet of any railroad property and affecting any railroad bridge or trestle, tracks, roadbeds, tunnel, underpass or crossing;

(2) That indemnifies an architect, engineer or surveyor for injury or damage arising out of:

(a) Preparing, approving, or failing to prepare or approve, maps, shop drawings, opinions, reports, surveys, field orders, change orders or drawings and specifications; or

(b) Giving directions or instructions, or failing to give them, if that is the primary cause of the injury or damage;

(3) Under which the insured, if an architect, engineer or surveyor, assumes liability for an injury or damage arising out of the insured's rendering or failure to render professional services, including those listed in (2) above and supervisory, inspection, architectural or engineering activities; or

(4) Under which you agree to indemnify another person or organization in a contract or agreement for liability that results solely from negligence of the indemnitee and does not directly relate to "your work" done for the indemnitee.

Includes copyrighted material of Insurance Services Office, Inc. with its permission.

Exclusion – Exterior Insulation and Finish Systems on Residential or Frame Buildings

ZURICH

Policy No.	Eff. Date of Pol.	Exp. Date of Pol.	Eff. Date of End.	Producer No.	Add'l. Prem	Return Prem.

Named Insured / Mailing Address:

Producer:

THIS ENDORSEMENT CHANGES THE POLICY. PLEASE READ IT CAREFULLY.

This endorsement modifies insurance provided under the:

Commercial General Liability Coverage Part

A. This insurance does not apply to "bodily injury", "property damage" or "personal and advertising injury" arising out of, caused by, or attributable, whether in whole or in part, to the following:

1. The design, manufacture, construction, fabrication, preparation, distribution and sale, installation, application, maintenance or repair, including remodeling, service, correction or replacement, of any "exterior insulation and finish system" or any part thereof, or any substantially similar system or any part thereof, including the application or use of conditioners, primers, accessories, flashings, coatings, caulking or sealants in connection with such a system, on any "residential building construction" or "frame building"; or
2. "Your product" or "your work" with respect to any exterior component, fixture or feature of any structure if an "exterior insulation and finish system", or any substantially similar system, is used on the part of that "residential building construction" or "frame building" containing that component, fixture or feature.

B. The following definitions are added to the **Definitions** Section:

1. "Exterior insulation and finish system" means a non-load bearing exterior cladding or finish system, and all component parts therein, used on any part of any "residential building construction" or "frame building", and consisting of:
   - **a.** A rigid or semi-rigid insulation board made of expanded polystyrene and other materials;
   - **b.** The adhesive and/or mechanical fasteners used to attach the insulation board to the substrate;
   - **c.** A reinforced or unreinforced base coat;
   - **d.** A finish coat providing surface texture to which color may be added; and
   - **e.** Any flashing, caulking or sealant used with the system for any purpose.
2. "Residential building construction" means:
   - **a.** Any single family or multi-family dwelling, including but not limited to houses, townhomes, townhouses, condominiums, cooperatives, duplexes, triplexes, fourplexes or apartments;
   - **b.** Any structure that combines any other use with "residential building construction" as described in Paragraph **B.2.a.** above; and
   - **c.** Any other structure, improvement or grading of land which is attached to or ancillary to any structure identified in Paragraphs **a.** or **b.** above;

Includes copyrighted material of Insurance Services Office, Inc., with its permission.

"Residential building construction" does not include "your work" for any structure that functions solely as time shares, a hotel, a motel, a nursing home, an assisted living senior housing care facility, a college campus dormitory or government housing on military bases.

3. "Frame building" means any structure that includes or contains any exterior cladding or structural load-bearing components that are made of wood or comprised of wood products.

All other terms and conditions of this Policy remain unchanged

Includes copyrighted material of Insurance Services Office, Inc., with its permission.

ZURICH®

Earlier Notice of Cancellation or Non-Renewal

THIS ENDORSEMENT CHANGES THE POLICY. PLEASE READ IT CAREFULLY.

This endorsement modifies insurance provided under the:

COMMERCIAL GENERAL LIABILITY COVERAGE PART

SCHEDULE

1. Number of days required for notice of non-renewal (other than for nonpayment of premium): 90
   (If the number of days is not provided above, please see the nonrenewal provisions of your policy.)
2. Number of days required for notice of cancellation (other than for nonpayment of premium): 90
   (If the number of days is not provided above, please see the cancellation provisions of your policy.)
3. Number of days required for notice of cancellation (for nonpayment of premium): 10
   (If the number of days is not provided above, please see the cancellation provisions of your policy.)

A. For any statutorily permitted reason for non-renewal other than nonpayment of premium, the number of days required for notice of non-renewal, as provided in the Commercial General Liability Conditions, as amended by an applicable state endorsement or as provided by an applicable state's change in coverage regulation is increased to the number of days shown in Paragraph **1.** in the Schedule above.

B. For any statutorily permitted reason for cancellation other than nonpayment of premium, the number of days required for notice of cancellation, as provided in the Common Policy Conditions, as amended by an applicable state endorsement or as provided by an applicable state's change in coverage regulation is increased to the number of days shown in Paragraph **2.** in the Schedule above.

C. For nonpayment of premium, the number of days required for notice of cancellation, as provided in the Common Policy Conditions, as amended by an applicable state endorsement or as provided by an applicable state's change in coverage regulation is increased to the number of days shown in Paragraph **3.** in the Schedule above.

All other terms and conditions of your policy remain the same.

Includes copyrighted material of Insurance Services Office, Inc., with its permission.

Combined Aggregate Deductible

ZURICH

Policy No.	Eff. Date of Pol.	Eff. Date of End.
GLO 0183287-00	08/01/2017	

THIS ENDORSEMENT CHANGES THE POLICY. PLEASE READ IT CAREFULLY.

This endorsement modifies insurance provided under the:
Commercial General Liability Coverage Part
Employee Benefits Liability Coverage Part
Liquor Liability Coverage Part
Stop Gap Employers Liability Coverage Part

DEDUCTIBLE SCHEDULE

Coverage		Deductible Amount	Basis
Coverage A.	"Bodily Injury" and "Property Damage" Liability All persons or organizations		Each "Occurrence"
	"Bodily Injury" Liability Only All persons or organizations		Each "Occurrence"
	"Property Damage" Liability Only All persons or organizations		Each "Occurrence"
Coverage A.	"Bodily Injury" and "Property Damage" Liability		Each Claim
	"Bodily Injury" Liability Only		Each Claim
	"Property Damage" Liability Only		Each Claim
Coverage B.	"Personal and Advertising Injury" Liability By offense – Any one person or organization		Each Claim
Coverage C.	Medical Payments		Any One Person
Additional Coverage	Employee Benefits Liability		Each Act, Error or Omission
Additional Coverage	Liquor Liability		Each Common Cause
Additional Coverage	Stop Gap Employers Liability		Each Accident
	Stop Gap Employers Liability - disease		Each "Employee"

ALLOCATED LOSS ADJUSTMENT EXPENSE SELECTION SCHEDULE

Select One		
Option 1 ☒	As respects each Deductible Amount, you will reimburse us for all "allocated loss adjustment expense", even if there is no payment for other than "allocated loss adjustment expense". "Allocated loss adjustment expense" reimbursements will contribute toward your Deductible Amount as shown in the **Deductible Schedule** and your Combined Aggregate Deductible Amount as shown in the **Combined Aggregate Deductible Schedule**.	
Option 2 ☐	As respects each Deductible Amount, you will reimburse us for "allocated loss adjustment expense" as follows:	
	(a)	If the total amount payable for other than "allocated loss adjustment expense" as respects the basis for each Deductible Amount is equal to or less than the Deductible Amount(s) or if there is no amount payable other than "allocated loss adjustment expense", then you will reimburse us for all "allocated loss adjustment expense". "Allocated loss adjustment expense" reimbursements will not contribute toward either your Deductible Amount as shown in the **Deductible Schedule** or your Combined Aggregate Deductible Amount as shown in the **Combined Aggregate Deductible Schedule**; or
	(b)	If the total amount payable for other than "allocated loss adjustment expense" exceeds the Deductible Amount, you will reimburse us a pro-rata share of total "allocated loss adjustment expense" based on the ratio of the Deductible Amount divided by the total amount payable for other than "allocated loss adjustment expense" as respects the basis for each Deductible Amount. "Allocated loss adjustment expense" reimbursements will not contribute toward either your Deductible Amount as shown in the **Deductible Schedule** or your Combined Aggregate Deductible Amount as shown in the **Combined Aggregate Deductible Schedule**.
Option 3 ☐	As respects each Deductible Amount, you will reimburse us for all "allocated loss adjustment expense", even if there is no payment for other than "allocated loss adjustment expense". "Allocated loss adjustment expense" reimbursements will not contribute toward either your Deductible Amount as shown in the **Deductible Schedule** or your Combined Aggregate Deductible Amount as shown in the **Combined Aggregate Deductible Schedule**.	

If no option is selected, Option 3 will apply.

A. How the Deductible Amount Applies

You will reimburse us for the Deductible Amount(s) shown in the **Deductible Schedule** and for "allocated loss adjustment expenses" incurred based on the **Allocated Loss Adjustment Expense Selection Schedule**. The Deductible Amount(s) applies as follows:

1. If an Each Occurrence Deductible is shown, the Deductible Amount applies to all sums payable because of any one "occurrence", regardless of the number of persons or organizations who sustain damages because of that "occurrence".

2. If an Each Claim Deductible is shown, the Deductible Amount applies to all sums payable for each claim, sustained by any one person or organization.

    a. For Other than Coverage B, to all sums payable for each claim, sustained by any one person or organization, and

    b. For Coverage B, to all damages sustained by any one person or organization as the result of an offense.

3. Medical Payments - If an Any One Person limit is shown, the Deductible Amount applies to all sums payable to any one person as a result of an accident sustained by that person.

4. Employee Benefits Liability - If an Each Act, Error or Omission Deductible is shown, the Deductible Amount applies to all sums payable for all damages sustained by any one employee, including the employee's dependents and beneficiaries, because of acts, errors or omissions committed in the administration of employee benefit programs.

5. Liquor Liability - If a Common Cause Deductible is shown, the Deductible Amount applies to all sums payable for all injury sustained by one or more persons or organizations as the result of the selling, serving or furnishing of any alcoholic beverage to any one person.

6. Stop Gap Employers Liability - If an Each Accident Deductible is shown, the Deductible Amount applies to all sums payable as the result of an accident, regardless of the number of people who sustain damages because of that accident.

7. Stop Gap Employers Liability - disease - If an Each Employee Deductible is shown, the Deductible Amount applies to all sums payable because of any one disease, and applies separately to each affected employee.

B. Deductible Provisions

1. If more than one Deductible Amount applies to sums payable arising from the same "incident" because more than one Coverage applies, you will be responsible for each and every applicable Deductible Amount.

2. Deductible Amount(s) apply separately to each consecutive annual period and to any remaining period of less than 12 months, starting with the beginning of the policy period shown in the Declarations.

3. Your obligation to pay the Deductible Amount(s) shown on this policy is not fulfilled by:

   a. The payment of a Deductible Amount under any other policy; or

   b. Any payment made by us or another insurance company;

   even if 3a. or 3b. above applies to the same "incident" as the Deductible Amount due under this policy.

4. If more than one policy issued by us applies to sums payable because of a single continuous "incident", the Deductible Amount(s) applies separately to each policy that we issue to which this endorsement or a similar Deductible Endorsement applies. Deductible Amounts also apply separately to each annual period and any remaining period of less than 12 months as described in **B.**2. above.

5. If a Coverage Part or Additional Coverage of this policy specifically applies a separate deductible(s):

   a. the separate additional deductible amount applies to any loss separately and before the Deductible Amount(s) shown on the Schedule of this endorsement; and

   b. the Deductible Amount(s) shown on the Schedule of this endorsement applies only if the loss exceeds the separate additional deductible amount described in 5.a. above, subject to the other terms and conditions of this endorsement.

C. Combined Aggregate Deductible Amount

1. The Combined Aggregate Deductible Amount shown in the **Combined Aggregate Deductible Schedule** for all policies listed in the **Combined Aggregate Deductible Schedule**, is the most you must reimburse us for the sum of:

   a. all applicable Deductible Amount(s) as shown in each policy's **Deductible Schedule** that are included in each policy's Combined Aggregate Deductible Endorsement(s); and

b. all applicable "allocated loss adjustment expense" in accordance with each policy's **Allocated Loss Adjustment Expense Selection Schedule(s)** that are included in each policy's Combined Aggregate Deductible Endorsement(s).

This single Combined Aggregate Deductible Amount applies to the entire policy period and to any remaining extension period of any policies.

2. The Combined Aggregate Deductible Amount is adjustable. The final Combined Aggregate Deductible Amount will be determined at the end of the policy period by an audit of your records, and will be based upon the sum of: the Rate(s) shown in the **Combined Aggregate Deductible Schedule** multiplied by the final audited Exposure(s), for each of the policies included in the **Combined Aggregate Deductible Schedule**. The amount shown in the **Combined Aggregate Deductible Schedule** as the Combined Aggregate Deductible Amount is an estimated amount, and is based on an estimate of what the audit of your records will develop.

   In no event will the final audited Combined Aggregate Deductible Amount be less than the Combined Aggregate Deductible Amount shown in the **Combined Aggregate Deductible Schedule**, unless a Minimum Combined Aggregate Deductible Amount is shown in the **Combined Aggregate Deductible Schedule**. If a Minimum Combined Aggregate Deductible Amount is shown, the final audited Combined Aggregate Deductible Amount will not be less than the Minimum Combined Aggregate Deductible Amount.

D. Allocated Loss Adjustment Expense Reimbursement

In accordance with the **Allocated Loss Adjustment Expense Selection Schedule**:

1. If Option 1 is selected, "allocated loss adjustment expense" reimbursements made by you contribute to your Deductible Amount and Combined Aggregate Deductible Amount.

2. If Option 2 or Option 3 is selected, then you will reimburse us for all or pro-rata "allocated loss adjustment expense", as may apply, in accordance with the **Allocated Loss Adjustment Expense Selection Schedule** above, even if the Deductible Amount or the Combined Aggregate Deductible Amount, if applicable, is exceeded.

E. Application of the Deductible Amount to Payable Amounts

1. You will reimburse us for "allocated loss adjustment expense" according to the option selected in the **Allocated Loss Adjustment Expense Selection Schedule**.

2. Upon settlement or final adjudication of a claim, we will apply the Deductible Amount against payable amounts as follows:

   a. Sums paid other than those attributable to "allocated loss adjustment expense"; then

   b. "Allocated loss adjustment expense" already reimbursed by you; then

   c. "Allocated loss adjustment expense" yet to be reimbursed by you, if applicable.

F. Effect of Deductible Amount on Limits of Insurance

The applicable limits of insurance for the coverage part to which a Deductible Amount applies will be reduced only by that portion of the Deductible Amount that is not attributable to "allocated loss adjustment expenses".

G. Conditions

1. Voluntary Payments

If you voluntarily make any payment, assume any obligation or incur any expense, without our consent, then you do so at your own cost. Any such voluntary payment, assumed obligation or incurred expense does not contribute towards any applicable Deductible Amount(s) or Combined Aggregate Deductible Amount under this policy.

2. **Application of Recovered Amounts**

   We have your rights and the rights of persons entitled to the benefits of this insurance to recover sums that are reimbursable under this endorsement from anyone liable for the injury or damages. You will do everything necessary to protect those rights for us and to help us enforce them.

   If we recover any payment made under this policy from anyone liable for injury or damages, the recovered amount will first be applied to any payments made by us in excess of the Deductible Amount. The remainder of the recovery, if any, will then be applied to reduce the Deductible Amount reimbursed or reimbursable by you as respects that injury or damages.

3. **Payment of Amounts Owed Under This Endorsement**

   a. We may pay any part or all of any Deductible Amount(s) or "allocated loss adjustment expense" to effect settlement of any claim and, upon notification of the action taken you will reimburse us for such part of any Deductible Amount(s) or "allocated loss adjustment expense" as shown on the billing from us. You must pay us for all amounts for which you are responsible under this endorsement and reimburse us for any such amounts that we pay by the due date shown on the billing from us.

   b. If you fail to reimburse us for any amounts as required by this endorsement or policy, we may cancel this policy for nonpayment in accordance with the applicable law. Cancellation of this policy does not relieve you from any deductible obligations reimbursable by you.

   c. The first Named Insured shown in the Declarations is authorized to and will reimburse us for all amounts paid by us on behalf of all "insureds".

   d. Each Named Insured is jointly and severally liable for all reimbursements due to us under this endorsement, whether or not that Named Insured is involved in the claim, proceeding or "suit" causing any such amount to be due to us.

H. Definitions

1. "Allocated loss adjustment expense" is an expense directly allocable to a specific claim including but not limited to: all supplementary payments as set forth in this policy; all court costs, fees and expenses; all costs, fees and expenses for or incurred in connection with all attorneys, witnesses, experts, depositions, reported or recorded statements, summonses, service of process, legal transcripts or testimony, copies of any public records; alternative dispute resolution proceedings; interest; investigative services, non-employee adjusters, medical examinations, autopsies, medical cost containment; declaratory judgment, subrogation claims and proceedings, and any other fees, costs or expenses reasonably chargeable to the investigation, negotiation, settlement or defense of a claim or a loss under this policy.

2. "Incident", for purposes of this endorsement only, means an "occurrence", offense, claim, accident, act, error or omission, common cause, disease or any other event, as defined or used in our policy, to which a Deductible Amount(s) applies.

I. Other Terms

1. The terms of this insurance apply irrespective of the application of any Deductible Amount(s), including those with respect to:

   a. Our right and duty to investigate or defend the Insured against any "suits" seeking those damages; and

   b. Your duties in the event of a claim or circumstances likely to result in a claim.

2. You understand that your duties under this endorsement may continue after this policy expires or is cancelled.

Lead Liability Exclusion

ZURICH

Policy No.	Eff. Date of Pol.	Exp. Date of Pol.	Eff. Date of End.	Producer	Add'l Prem.	Return Prem.
GLO 0183287 00	08/01/2017	08/01/2023		36140000	$ INCL	$

THIS ENDORSEMENT CHANGES THE POLICY. PLEASE READ IT CAREFULLY.

This endorsement modifies insurance provided under the:

Commercial General Liability Coverage Part

The following exclusion is added to Paragraph **2. Exclusions**, of **Section I - Coverage A - Bodily Injury And Property Damage Liability** and Paragraph **2. Exclusions**, of **Coverage B - Personal And Advertising Injury Liability**:

This insurance does not apply to:

Lead

(1) "Bodily injury", "property damage" or "personal and advertising injury" arising out of, resulting from, caused by or related to: the actual, alleged or threatened:

(a) Exposure to or existence of lead, paint containing lead, or any other material, product or substance containing lead; or

(b) Manufacture, distribution, sale, resale, re-branding, installation, repair, removal, encapsulation, abatement, replacement or handling of lead, paint containing lead, or any other material, product or substance containing lead,

whether the lead is or was at any time airborne, ingested, inhaled, absorbed, transmitted in any fashion, or found in any form whatsoever, or whether any other cause, event, material, product or substance contributed concurrently or in any sequence to the injury or damage.;

(2) Any sums that any insured or other entity must pay, repay or reimburse because of any:

(a) Request, demand, order or statutory or regulatory requirement that any insured or others test for, sample, monitor, clean up, remove, abate, cover, contain, treat, mitigate, or neutralize lead, paint containing lead, or any other material, product or substance containing lead, or in any way respond to, or assess the effects of lead in any form; or

(b) Claim or "suit" for damages relating to testing for, sampling, monitoring, cleaning up, removing, abating, covering, containing, treating, mitigating, or neutralizing lead, paint containing lead, or any other material, product or substance containing lead or in any way responding to or assessing the effects of lead in any form.

(3) Any other loss, cost or expense arising out of, caused by or relating in any way to lead.

Asbestos Exclusion Endorsement

Policy No.	Eff. Date of Pol.	Exp. Date of Pol.	Eff. Date of End.	Producer	Add'l Prem.	Return Prem.
GLO 0183287 00	08/01/2017	08/01/2023		36140000	$ INCL	$

THIS ENDORSEMENT CHANGES THE POLICY. PLEASE READ IT CAREFULLY.

This endorsement modifies insurance provided under the:

Commercial General Liability Coverage Part

The following exclusion is added to paragraph **2. Exclusions** of **Section I - Coverage A – Bodily Injury And Property Damage Liability** and **Coverage B - Personal And Advertising Injury Liability:**

2. Exclusions

This insurance does not apply to:

Asbestos

A. "Bodily injury", "property damage" or "personal and advertising injury" arising out of or which would not have occurred, in whole or in part, but for the actual, alleged or threatened discharge, dispersal, release, leakage, leaching, friability, flaking, escape or presence of asbestos, regardless of whether any other cause, event, material or product contributed concurrently or in any sequence to the injury or damage; or

B. Any sums that any insured or other entity must pay, repay or reimburse because of any:

1. Request, demand, order, statutory or regulatory requirement, direction or determination that any insured or others test for, investigate, monitor, clean up, remove, study, contain, treat, encapsulate, control or take any other action regarding asbestos; or
2. Claim or "suit" for damages arising out of or relating in any way to any request, demand, order, statutory or regulatory requirement, direction or determination that any insured or others test for, investigate, monitor, clean up, remove, study, contain, treat, encapsulate, control or take any other action regarding asbestos; or

C. Any other loss, cost or expense arising out of or relating in any way to asbestos.

Includes copyrighted material of Insurance Services Office, Inc. with its permission.

Sole Agent for Insureds

ZURICH

Policy No.	Eff. Date of Pol.	Exp. Date of Pol.	Eff. Date of End.	Producer No.	Add'l. Prem	Return Prem.
GLO 0183287-00	08/01/2017	08/01/2023		36140000	**INCL**	

Named Insured / Mailing Address:

Producer:

THIS ENDORSEMENT CHANGES THE POLICY. PLEASE READ IT CAREFULLY.

This endorsement modifies insurance provided under the:

Commercial General Liability Coverage Part

It is agreed that this policy is issued at the direction of the first Named Insured, which shall be solely responsible for the payment of premiums and losses under the deductible amount as outlined in the policy and shall have other policy rights to act on behalf of insureds. The insureds have assigned to the first Named Insured:

1. The rights, title, and interest to receive any and all return of premium, dividends, discounts or other adjustments; and
2. The right to request cancellation of the policy; and
3. Authorization to act on their behalf as respects changes to any provisions of this insurance policy.

We consent to such assignment of rights, title and interest.

Other Terms

All other terms and conditions of the policy not changed by the provisions of this endorsement continue to apply as currently written.

Includes copyrighted material of Insurance Services Office, Inc. with its permission.

Joint Defense – Wrap-up

ZURICH

Policy No.	Eff. Date of Pol.	Exp. Date of Pol.	Eff. Date of End.	Producer No.	Add'l. Prem	Return Prem.

Named Insured / Mailing Address: Producer:

THIS ENDORSEMENT CHANGES THE POLICY. PLEASE READ IT CAREFULLY.

This endorsement modifies insurance provided under the:
Commercial General Liability Coverage Part

The following is added to **SECTION IV – COMMERCIAL GENERAL LIABILITY CONDITIONS:**

7. Separation of Insureds part b. is replaced with the following:

b. Separately to each insured against whom claim is made or "suit" is brought, however;

(1) Absent an actual conflict of interest between two insureds, we shall have the right to retain one counsel to defend all such insureds in a joint defense.

An actual conflict of interest shall be deemed to exist only when the following circumstances exist:

(a). A insured against whom claim is made or "suit" is brought performed work or furnished materials, parts or equipment in connection with such work on a specific portion of the construction project on which any other insured also performed work or furnished materials, parts or equipment in connection with that same specific portion of the construction project; and

(b). An apportionment of responsibility will occur between the insureds for "bodily injury" or "property damage" alleged to have been concurrently, jointly or consecutively caused in connection with that same specific portion of the construction project.

(2) An actual conflict of interest may be waived by the insured in writing.

Includes copyrighted material of Insurance Services Office, Inc. with its permission.

Damage to the Project Exclusion

ZURICH

Policy No.	Eff. Date of Pol.	Exp. Date of Pol.	Eff. Date of End.	Producer No.	Add'l. Prem	Return Prem.

THIS ENDORSEMENT CHANGES THE POLICY. PLEASE READ IT CAREFULLY.

This endorsement modifies insurance provided under the:

Commercial General Liability Coverage Part

Solely with respect to any "designated project", exclusion **j.** of Paragraph **2. Exclusions** of Section **I – Coverage A – Bodily Injury And Property Damage Liability** is replaced by the following:

2. Exclusions

This insurance does not apply to:

j. Damage to Property

"Property damage" to:

(1) Property you own, rent, or occupy, including any costs or expenses incurred by you, or any other person, organization or entity, for repair, replacement, enhancement, restoration or maintenance of such property for any reason, including prevention of injury to a person or damage to another's property;

(2) Premises you sell, give away or abandon, if the "property damage" arises out of any part of those premises;

(3) Property loaned to you;

(4) Personal property in the care, custody or control of any insured;

(5) Any part of any "designated project(s)", including materials, machinery and equipment intended to become a part of the "designated project(s)", if such "property damage" occurs during the course of construction; or

(6) That particular part of any property that must be restored, repaired or replaced because "your work" was incorrectly performed on it.

Paragraphs **(1)** and **(3)** of this exclusion do not apply to "property damage" (other than damage by fire) to premises, including the contents of such premises, rented to you for a period of 7 or fewer consecutive days. A separate limit of insurance applies to Damage To Premises Rented To You as described in Section **III** – Limits Of Insurance.

Paragraph **(2)** of this exclusion does not apply if the premises are "your work" and were never occupied, rented or held for rental by you.

Paragraphs **(3)**, **(5)** and **(6)** of this exclusion do not apply to liability assumed under a sidetrack agreement.

Paragraph **(6)** of this exclusion does not apply to "property damage" included in the "products-completed operations hazard".

All other terms and conditions of this policy remain unchanged.

Includes copyrighted material of Insurance Services Office, Inc. with its permission.

Limitation of Coverage to Designated Project(s)

ZURICH

Policy No.	Eff. Date of Pol.	Exp. Date of Pol.	Eff. Date of End.	Producer No.	Add'l. Prem	Return Prem.
GLO 0183287-00	08/01/2017	08/01/2023		36140000	**INCL**	

Named Insured / Mailing Address: Producer:

THIS ENDORSEMENT CHANGES THE POLICY. PLEASE READ IT CAREFULLY.

This endorsement modifies insurance provided under the:
Commercial General Liability Coverage Part

SCHEDULE

Project: All construction operations associated with the project(s) endorsed on to this policy via the Designated Project-Declarations endorsement, or the following project(s) to be included in the Program:

Designated Project(s)
REFER TO MONTHLY REPORT IN FILE WHICH INCLUDES EACH PROJECT
IDENTIFIED IN THE MARSH MONTHLY REPORT FOR THE UNIVERSITY
OF TEXAS SYSTEM ROLLING OWNER CONTROLLED INSURANCE PROGRAM
PHASE VII WITH COVERAGE FOR SUCH PROJECT BEGINNING ON THE
NOTICE TO PROCEED DATE AS LISTED IN THE REPORT.

"Designated Project" means:

The project shown in this SCHEDULE, including operations on and off the project site or location that are necessary or incidental to the project as described in contract documents. "Designated Project" includes the work site(s) associated with such "designated project(s)" and any offsite staging areas, as long as they are dedicated solely to the "designated project(s)". Also included are those areas immediately adjacent to the "designated projects", including boundaries of local streets or public easement, in which the enrolled subcontractors at any tier perform work under their respective contracts.

(If no entry appears above, information required to complete this endorsement will be shown in the Declarations as applicable to this endorsement.)

1. The insurance provided by this policy applies only to "bodily injury", "property damage", "personal and advertising injury" and medical expenses arising out of the "designated project(s)" shown in the SCHEDULE above.

2. For purposes of this insurance, "Designated Project" does not include:
   (1) "Your work" at other projects or project site(s) or locations not shown in the SCHEDULE above;
   (2) Your other operations that are not connected to or do not emanate from the project shown in the SCHEDULE above, including operations at your permanent locations; or

Includes copyrighted material of Insurance Services Office, Inc. with its permission.

(3) Operations in the business described in the Declarations of this policy but covered by the provisions of another policy.

Includes copyrighted material of Insurance Services Office, Inc. with its permission.

Designated Project(s) – General Aggregate Limit

ZURICH

Policy No.	Eff. Date of Pol.	Exp. Date of Pol.	Eff. Date of End.	Producer No.	Add'l. Prem	Return Prem.

Named Insured / Mailing Address: Producer:

THIS ENDORSEMENT CHANGES THE POLICY. PLEASE READ IT CAREFULLY.

This endorsement modifies insurance provided under the:

Commercial General Liability Coverage Part

(If no entry appears above, information required to complete this endorsement will be shown in the Declarations as applicable to this endorsement.)

A. For all sums which the insured becomes legally obligated to pay as damages within the coverage provided under COVERAGE A (SECTION I), and for all medical expenses caused by accidents under COVERAGE C (SECTION I), which can be attributed only to ongoing operations at a single designated project covered by this policy:

1. The General Aggregate Limit shown in the Declarations of this policy applies separately to each designated construction project to which this policy applies.
2. The Designated Construction Project General Aggregate Limit is the most we will pay for the sum of all damages under COVERAGE A, except damages because of "bodily injury" or "property damage" included in the "products-completed operations hazard," and for medical expenses under COVERAGE C regardless of the number of:
   a. Insureds;
   b. Claims made or "suits" brought; or
   c. Persons or organizations making claims or bringing "suits."
3. Any payments made under COVERAGE A for damages or under COVERAGE C for medical expenses shall reduce the General Aggregate Limit for that designated construction project. Such payments shall not reduce the General Aggregate Limit for any other designated construction project to which this policy applies.
4. The limits shown in the Declarations for Each Occurrence, Fire Damage and Medical Expense continue to apply and shall be subject to the General Aggregate Limit applicable to the project from which the loss arises.

B. Any payments for damages within the "products-completed operations hazard" under this policy will not reduce the General Aggregate Limit applicable to the project from which the loss arises.

C. If the designated project has been abandoned, delayed, or abandoned and then restarted, or if the authorized contracting parties deviate from plans, blueprints, designs, specifications or timetables, the project shall be deemed to be the same project for purposes of determining the General Aggregate Limit applicable to the project.

Includes copyrighted material of Insurance Services Office, Inc. with its permission.

D. The provisions of SECTION III – LIMITS OF INSURANCE not otherwise modified by this endorsement shall continue to apply as stipulated.

Copyright, Insurance Services Office, Inc., 1996

Amendment of Limits - Products-Completed Operations Aggregate Limit

ZURICH

Policy No.	Eff. Date of Pol.	Exp. Date of Pol.	Eff. Date of End.	Producer No.	Add'l. Prem	Return Prem.

Named Insured / Mailing Address: Producer:

THIS ENDORSEMENT CHANGES THE POLICY. PLEASE READ IT CAREFULLY.

This endorsement modifies insurance provided under the:

Commercial General Liability Coverage Part

Products-Completed Operations Hazard

SCHEDULE

Policy Products-Completed Operations Aggregate Limit	$ 25,000,000	All Projects Combined

SECTION III – LIMITS OF INSURANCE is revised as follows:

1. Paragraph 3 is deleted and replaced by the following:

3. a. The limits of insurance shown in the Declarations and endorsements to this policy are subject to the Policy Products-Completed Operations Aggregate Limit shown in the SCHEDULE above. The Policy Products-Completed Operations Aggregate Limit is the most we will pay under Coverage A for damages because of "bodily injury" and "property damage" within the "products-completed operations hazard" for all "designated projects" combined, regardless of the number of designated projects" covered under this policy or the number of years in the policy period and any extended completed operations coverage period.

b. Subject to the Policy Products-Completed Operations Aggregate Limit shown above, the Products-Completed Operations Aggregate Limit shown in the Declarations to this policy shall apply as follows:

For all "designated projects" for which "A" is selected in a Designated Project – Declarations endorsement to this policy, the Products-Completed Operations Aggregate Limit is the most we will pay under Coverage A for damages because of "bodily injury" and "property damage" within the "products-completed operations hazard" for all such "designated projects" combined. The Products-Completed Operations Aggregate Limit does not apply separately to each such project.

Includes copyrighted material of Insurance Services Office, Inc. with its permission.

For each "designated project" for which "B" is selected in a Designated Project – Declarations endorsement to this policy, the Products-Completed Operations Aggregate Limit is the most we will pay under Coverage A for damages because of "bodily injury" and "property damage" within the "products-completed operations hazard" for that project.

For all "designated projects" for which "C" is selected in a Designated Project – Declarations endorsement to this policy, the Products-Completed Operations Aggregate Limit applies once to the policy period and extended completed operations period combined, regardless of the number of years in the policy period and extended completed operations period or the number of "designated projects".

For all "designated projects" for which "D" is selected in a Designated Project – Declarations endorsement to this policy, the Products-Completed Operations Aggregate Limit shown in the Declarations of this policy applies once to the policy period, and a separate Products-Completed Operations Aggregate Limit shown on the Designated Projects – Declarations endorsement applies to the extended completed operations coverage period, regardless of the number of years in the policy period and extended completed operations coverage period.

2. The last paragraph of **SECTION III – LIMITS OF INSURANCE** does not apply to the Products-Completed Operations Aggregate Limits of this policy.

Includes copyrighted material of Insurance Services Office, Inc. with its permission.

COMMERCIAL GENERAL LIABILITY
CG 01 03 06 06

THIS ENDORSEMENT CHANGES THE POLICY. PLEASE READ IT CAREFULLY.

TEXAS CHANGES

This endorsement modifies insurance provided under the following:

COMMERCIAL GENERAL LIABILITY COVERAGE PART

A. With regard to liability for Bodily Injury, Property Damage and Personal And Advertising Injury, unless we are prejudiced by the insured's or your failure to comply with the requirement, no provision of this Coverage Part requiring you or any insured to give notice of "occurrence", claim or "suit", or forward demands, notices, summonses or legal papers in connection with a claim or "suit" will bar coverage under this Coverage Part.

© ISO Properties, Inc., 2005

POLICY NUMBER: GLO 0183287-00

COMMERCIAL GENERAL LIABILITY
CG 04 37 05 14

THIS ENDORSEMENT CHANGES THE POLICY. PLEASE READ IT CAREFULLY.

ELECTRONIC DATA LIABILITY

This endorsement modifies insurance provided under the following:

COMMERCIAL GENERAL LIABILITY COVERAGE PART

SCHEDULE

Loss Of Electronic Data Limit:	$2,000,000
Information required to complete this Schedule, if not shown above, will be shown in the Declarations.	

A. Exclusion **2.p.** of **Coverage A – Bodily Injury And Property Damage Liability** in **Section I – Coverages** is replaced by the following:

2. Exclusions

This insurance does not apply to:

p. Access Or Disclosure Of Confidential Or Personal Information And Data-related Liability

Damages arising out of:

(1) Any access to or disclosure of any person's or organization's confidential or personal information, including patents, trade secrets, processing methods, customer lists, financial information, credit card information, health information or any other type of nonpublic information; or

(2) The loss of, loss of use of, damage to, corruption of, inability to access, or inability to manipulate "electronic data" that does not result from physical injury to tangible property.

This exclusion applies even if damages are claimed for notification costs, credit monitoring expenses, forensic expenses, public relations expenses or any other loss, cost or expense incurred by you or others arising out of that which is described in Paragraph **(1)** or **(2)** above.

However, unless Paragraph **(1)** above applies, this exclusion does not apply to damages because of "bodily injury".

B. The following is added to Paragraph **2. Exclusions** of **Section I – Coverage B – Personal And Advertising Injury Liability:**

2. Exclusions

This insurance does not apply to:

Access Or Disclosure Of Confidential Or Personal Information

"Personal and advertising injury" arising out of any access to or disclosure of any person's or organization's confidential or personal information, including patents, trade secrets, processing methods, customer lists, financial information, credit card information, health information or any other type of nonpublic information.

This exclusion applies even if damages are claimed for notification costs, credit monitoring expenses, forensic expenses, public relations expenses or any other loss, cost or expense incurred by you or others arising out of any access to or disclosure of any person's or organization's confidential or personal information.

C. The following paragraph is added to **Section III – Limits Of Insurance:**

Subject to **5.** above, the Loss Of Electronic Data Limit shown in the Schedule above is the most we will pay under Coverage **A** for "property damage" because of all loss of "electronic data" arising out of any one "occurrence".

© Insurance Services Office, Inc., 2013

D. The following definition is added to the **Definitions** section:

"Electronic data" means information, facts or programs stored as or on, created or used on, or transmitted to or from computer software, including systems and applications software, hard or floppy disks, CD-ROMs, tapes, drives, cells, data processing devices or any other media which are used with electronically controlled equipment.

E. For the purposes of the coverage provided by this endorsement, the definition of "property damage" in the **Definitions** section is replaced by the following:

17. "Property damage" means:

a. Physical injury to tangible property, including all resulting loss of use of that property. All such loss of use shall be deemed to occur at the time of the physical injury that caused it;

b. Loss of use of tangible property that is not physically injured. All such loss of use shall be deemed to occur at the time of the "occurrence" that caused it; or

c. Loss of, loss of use of, damage to, corruption of, inability to access, or inability to properly manipulate "electronic data", resulting from physical injury to tangible property. All such loss of "electronic data" shall be deemed to occur at the time of the "occurrence" that caused it.

For the purposes of this insurance, "electronic data" is not tangible property.

© Insurance Services Office, Inc., 2013

COMMERCIAL GENERAL LIABILITY
CG 21 65 12 04

THIS ENDORSEMENT CHANGES THE POLICY. PLEASE READ IT CAREFULLY.

TOTAL POLLUTION EXCLUSION WITH A BUILDING HEATING, COOLING AND DEHUMIDIFYING EQUIPMENT EXCEPTION AND A HOSTILE FIRE EXCEPTION

This endorsement modifies insurance provided under the following:

COMMERCIAL GENERAL LIABILITY COVERAGE PART

Exclusion **f.** under Paragraph **2. Exclusions** of **Section I – Coverage A – Bodily Injury And Property Damage Liability** is replaced by the following:

This insurance does not apply to:

f. Pollution

(1) "Bodily injury" or "property damage" which would not have occurred in whole or part but for the actual, alleged or threatened discharge, dispersal, seepage, migration, release or escape of "pollutants" at any time.

This exclusion does not apply to:

(a) "Bodily injury" if sustained within a building which is or was at any time owned or occupied by, or rented or loaned to, any insured and caused by smoke, fumes, vapor or soot produced by or originating from equipment that is used to heat, cool or dehumidify the building, or equipment that is used to heat water for personal use, by the building's occupants or their guests; or

(b) "Bodily injury" or "property damage" arising out of heat, smoke or fumes from a "hostile fire" unless that "hostile fire" occurred or originated:

(i) At any premises, site or location which is or was at any time used by or for any insured or others for the handling, storage, disposal, processing or treatment of waste; or

(ii) At any premises, site or location on which any insured or any contractors or subcontractors working directly or indirectly on any insured's behalf are performing operations to test for, monitor, clean up, remove, contain, treat, detoxify, neutralize or in any way respond to, or assess the effects of, "pollutants".

(2) Any loss, cost or expense arising out of any:

(a) Request, demand, order or statutory or regulatory requirement that any insured or others test for, monitor, clean up, remove, contain, treat, detoxify or neutralize, or in any way respond to, or assess the effects of, "pollutants"; or

(b) Claim or suit by or on behalf of a governmental authority for damages because of testing for, monitoring, cleaning up, removing, containing, treating, detoxifying or neutralizing, or in any way responding to, or assessing the effects of, "pollutants".

© ISO Properties, Inc., 2003

COMMERCIAL GENERAL LIABILITY
CG 22 79 04 13

THIS ENDORSEMENT CHANGES THE POLICY. PLEASE READ IT CAREFULLY.

EXCLUSION – CONTRACTORS – PROFESSIONAL LIABILITY

This endorsement modifies insurance provided under the following:

COMMERCIAL GENERAL LIABILITY COVERAGE PART

The following exclusion is added to Paragraph **2. Exclusions** of **Section I – Coverage A – Bodily Injury And Property Damage Liability** and Paragraph **2. Exclusions** of **Section I – Coverage B – Personal And Advertising Injury Liability:**

1. This insurance does not apply to "bodily injury", "property damage" or "personal and advertising injury" arising out of the rendering of or failure to render any professional services by you or on your behalf, but only with respect to either or both of the following operations:
   a. Providing engineering, architectural or surveying services to others in your capacity as an engineer, architect or surveyor; and
   b. Providing, or hiring independent professionals to provide, engineering, architectural or surveying services in connection with construction work you perform.

   This exclusion applies even if the claims against any insured allege negligence or other wrongdoing in the supervision, hiring, employment, training or monitoring of others by that insured, if the "occurrence" which caused the "bodily injury" or "property damage", or the offense which caused the "personal and advertising injury", involved the rendering of or failure to render any professional services by you or on your behalf with respect to the operations described above.
2. Subject to Paragraph **3.** below, professional services include:
   a. Preparing, approving, or failing to prepare or approve, maps, shop drawings, opinions, reports, surveys, field orders, change orders, or drawings and specifications; and
   b. Supervisory or inspection activities performed as part of any related architectural or engineering activities.
3. Professional services do not include services within construction means, methods, techniques, sequences and procedures employed by you in connection with your operations in your capacity as a construction contractor.

© Insurance Services Office, Inc., 2012

POLICY NUMBER: GLO 0183287-00

COMMERCIAL GENERAL LIABILITY
CG 24 04 05 09

WAIVER OF TRANSFER OF RIGHTS OF RECOVERY AGAINST OTHERS TO US

This endorsement modifies insurance provided under the following:

COMMERCIAL GENERAL LIABILITY COVERAGE PART
PRODUCTS/COMPLETED OPERATIONS LIABILITY COVERAGE PART

SCHEDULE

Name Of Person Or Organization:
ANY PERSON OR ORGANIZATION THAT REQUIRES YOU TO WAIVE YOUR RIGHTS OF RECOVERY, IN A WRITTEN CONTRACT OR AGREEMENT WITH THE NAMED INSURED THAT IS EXECUTED PRIOR TO THE ACCIDENT OR LOSS.
Information required to complete this Schedule, if not shown above, will be shown in the Declarations.

The following is added to Paragraph **8. Transfer Of Rights Of Recovery Against Others To Us** of **Section IV – Conditions:**

We waive any right of recovery we may have against the person or organization shown in the Schedule above because of payments we make for injury or damage arising out of your ongoing operations or "your work" done under a contract with that person or organization and included in the "products-completed operations hazard". This waiver applies only to the person or organization shown in the Schedule above.

© Insurance Services Office, Inc., 2008

POLICY NUMBER: GLO 0183287-00

COMMERCIAL GENERAL LIABILITY
CG 24 17 10 01

THIS ENDORSEMENT CHANGES THE POLICY. PLEASE READ IT CAREFULLY.

CONTRACTUAL LIABILITY - RAILROADS

This endorsement modifies insurance provided under the following:

COMMERCIAL GENERAL LIABILITY COVERAGE PART

SCHEDULE

Scheduled Railroad:	Designated Job Site:
ALL CONTRACTS FOR WORK DONE FOR RAILROADS	

(If no entry appears above, information required to complete this endorsement will be shown in the Declarations as applicable to this endorsement.)

With respect to operations performed for, or affecting, a Scheduled Railroad at a Designated Job Site, the definition of "insured contract" in the Definitions section is replaced by the following:

9. "Insured Contract" means:

a. A contract for a lease of premises. However, that portion of the contract for a lease of premises that indemnifies any person or organization for damage by fire to premises while rented to you or temporarily occupied by you with permission of the owner is not an "insured contract";

b. A sidetrack agreement;

c. Any easement or license agreement;

d. An obligation, as required by ordinance, to indemnify a municipality, except in connection with work for a municipality;

e. An elevator maintenance agreement;

f. That part of any other contract or agreement pertaining to your business (including an indemnification of a municipality in connection with work performed for a municipality) under which you assume the tort liability of another party to pay for "bodily injury" or "property damage" to a third person or organization. Tort liability means a liability that would be imposed by law in the absence of any contract or agreement.

Paragraph **f.** does not include that part of any contract or agreement:

(1) That indemnifies an architect, engineer or surveyor for injury or damage arising out of:

(a) Preparing, approving or failing to prepare or approve maps, shop drawings, opinions, reports, surveys, field orders, change orders or drawings and specifications; or

(b) Giving directions or instructions, or failing to give them, if that is the primary cause of the injury or damage;

(2) Under which the insured, if an architect, engineer or surveyor, assumes liability for an injury or damage arising out of the insured's rendering or failure to render professional services, including those listed in Paragraph **(1)** above and supervisory, inspection, architectural or engineering activities.

© ISO Properties, Inc., 2000

COMMERCIAL GENERAL LIABILITY
CG 26 39 12 07

THIS ENDORSEMENT CHANGES THE POLICY. PLEASE READ IT CAREFULLY.

TEXAS CHANGES – EMPLOYMENT-RELATED PRACTICES EXCLUSION

This endorsement modifies insurance provided under the following:

COMMERCIAL GENERAL LIABILITY COVERAGE PART

A. The following exclusion is added to Paragraph **2., Exclusions** of Section **I – Coverage A – Bodily Injury And Property Damage Liability:**

This insurance does not apply to:

"Bodily injury" to:

(1) A person arising out of any:

(a) Refusal to employ that person;

(b) Termination of that person's employment; or

(c) Employment-related practices, policies, acts or omissions, such as coercion, demotion, evaluation, reassignment, discipline, defamation, harassment, humiliation, discrimination or malicious prosecution directed at that person; or

(2) The spouse, child, parent, brother or sister of that person as a consequence of "bodily injury" to that person at whom any of the employment-related practices described in Paragraphs **(a), (b)** or **(c)** above is directed.

This exclusion applies:

(1) Whether the injury-causing event described in Paragraphs **(a), (b)** or **(c)** above occurs before employment, during employment or after employment of that person;

(2) Whether the insured may be liable as an employer or in any other capacity; and

(3) To any obligation to share damages with or to repay someone else who must pay damages because of the injury.

B. The following exclusion is added to Paragraph **2., Exclusions** of Section **I – Coverage B – Personal And Advertising Injury Liability:**

This insurance does not apply to:

"Personal and advertising injury" to:

(1) A person arising out of any:

(a) Refusal to employ that person;

(b) Termination of that person's employment; or

(c) Employment-related practices, policies, acts or omissions, such as coercion, demotion, evaluation, reassignment, discipline, defamation, harassment, humiliation, discrimination or malicious prosecution directed at that person; or

(2) The spouse, child, parent, brother or sister of that person as a consequence of "personal and advertising injury" to that person at whom any of the employment-related practices described in Paragraphs **(a), (b)** or **(c)** above is directed.

© ISO Properties, Inc., 2006

Berkshire Hathaway
Specialty Insurance

17 State St. 22nd Floor
New York, NY 10005
www.bhspecialty.com

Date: **09/11/2017**

To: **Karolina Gamburg**
Marsh USA, Inc.
1166 Avenue of The Americas
New York, NY 10036

Re: The University Of Texas System
47-XSF-304056-01
08/01/2017 – 08/01/2023
Policy

Dear Karolina:

Attached please find the Policy for The University Of Texas System. This policy has been placed with Berkshire Hathaway Specialty Insurance Company (1314 Douglas Street, Suite 1400, Omaha, NE 68102-1944). Thank you for placing your business with Berkshire Hathaway Specialty Insurance. We value our relationship with Marsh USA, Inc. and look forward to working with you on future accounts.

For any claim related questions or to report a claim, please call our 24hr toll free number at 855.453.9675 or refer to the attached claims reporting sheet for fax, email and mail instructions.

If you have questions or concerns or claims, your Berkshire Hathaway Specialty team is just a phone call away.

Sincerely,

Victoria Picone
646-802-3587
victoria.picone@bhspecialty.com

Berkshire Hathaway
Specialty Insurance

United States

CLAIMS REPORTING

All claims under policies underwritten by Berkshire Hathaway Specialty Insurance should be reported to our centralized Loss Processing Center. Claims will be assigned to our technical staff or to one of our preferred service providers.

Our 24-hour toll free number: **855.453.9675**

Claims may be reported via email to: **claimsnotice@bhspecialty.com**

To report claims via mail or overnight mail refer to our website: **www.bhspecialty.com/claims**

EXPECT A PERSONAL APPROACH

While technology adds speed and efficiencies, it is top-quality people that drive top-quality claims handling. That's why we continue to grow our industry-leading claims team with the most experienced claims professionals in the business.

Moreover, at Berkshire Hathaway Specialty Insurance, our claims team makes communicating proactively with you throughout the claims process a priority. Should you face a claim, you will quickly see our response is not about drafting letters, it's about having a dialogue--and responding to your particular needs and concerns.

Whether you face a D&O claim, a property loss or a large scale casualty crisis, you will have the experts you need at your service. Putting your policy to work for you.

Berkshire Hathaway
Specialty Insurance

Berkshire Hathaway Specialty Insurance Company
1314 Douglas Street, Suite 1400
Omaha, NE 68102-1944

Follow Form Excess Liability

Common Policy Declarations

This Declarations Page is attached to and forms part of the Policy

		Policy No.: 47-XSF-304056-01	**Renewal of: New**
Item 1.	**Named Insured:**	The University Of Texas System	
	Mailing Address:	601 Colorado Street Austin, TX 78701	
	The Named Insured is:	☐Individual ☐Partnership ☐Joint Venture ☐Limited Liability Company ☒Organization (other than a Partnership or Joint Venture) ☐Trust	
	The Business of the Named Insured is:	University	
Item 2.	**Policy Period:**	From: 08/01/2017 to 08/01/2023 Both days at 12:01 a.m. local standard time at Mailing Address listed in Item 1, above.	
Item 3.	**Limits of Insurance:** *(as in Followed Underlying Policy)*	A. Per Occurrence	$25,000,000
		B. Aggregate Limit, except Auto:	$25,000,000
		C. Products-Completed Operations Aggregate Limit:	$25,000,000
Item 4.	**Followed Policy:**	A. Policy Number	GLO 4353409-00
		B. Name of Insurance Company	Zurich American Insurance Company
		C. Type of Insurance	General Liability
		D. Policy Period Both days at 12:01 am local standard time at the mailing address of the Named Insured	Effective From: 08/01/2017 to 08/01/2023;
Item 5.	**Premium:**	Total Advance:	
		Total Minimum:	
		Minimum Earned:	
		Terrorism Premium Included in Advanced:	

Berkshire Hathaway
Specialty Insurance

Estimated Total Exposure:	$3,000,000,000 Cost/Construction Value
Rate:	per $ of Cost/Construction Value

Audit Premium:	Auditable - Upon Expiration Date of Policy
Endorsements:	Per Schedule
In the event of a claim, please notify the following:	***By 24-hour toll free number:*** 855-453-9675 ***By Email:***claimsnotice@bhspecialty.com ***By Fax:*** 617-507-8259 ***By Mail:*** Log on to www.bhspecialty.com/claims-reporting.html for mailing address

This policy is comprised of this Declarations page, the policy form and endorsements, if any, attached at the inception or during the Policy Period.

Service of Suit may be made upon: Counsel, Legal Department, Berkshire Hathaway Specialty Insurance Company

1314 Douglas Street, Suite 1400
Omaha, NE 68102-1944

Signatures:

Ralph Tortorella, Secretary

Peter Eastwood, President

09/11/2017
Dated

FORMS SCHEDULE

Named Insured: The University Of Texas System

Policy No.: 47-XSF-304056-01

Form Number	Title
FF-XS-DEC-10/2014	Follow Form Excess Liability Common Policy Declarations
CLP-UN-016-07/2013	Forms Schedule
FFP-XS-001-10/2014	Follow Form Excess Liability Policy
FFP-XS-002-11/2014	Schedule of Underlying
CLP-UN-010-07/2013	Violation of Communication or Information Law Exclusion
CLP-UN-017-07/2013	Securities Exclusion
CLP-UN-078-11/2013	Products Completed Operations Extension Endorsement
CL-UN-083-01/2015	Act of Terrorism Self-Insured Retention Endorsement
FFP-XS-013-07/2014	Workers' Compensation and Similar Laws Exclusion
FF-XS-026-02/2016	Confidential or Personal Information Disclosure Exclusion Endorsement
CL-UN-075-12/2016	Cap On Losses From Certified Acts of Terrorism (ISO Based)
Manuscript	Composite Rate Endorsement
Manuscript	Limits of Insurance Construction Modification
FF-XS-005-07/2014	Issuance of Follow Form Excess Policy Prior to Issuance or Receipt of the Followed Policy

Follow Form Excess Liability Policy

THIS POLICY MAY CONTAIN OCCURRENCE, CLAIMS MADE, OR CLAIMS MADE AND REPORTED COVERAGES. VARIOUS PROVISIONS IN THIS POLICY RESTRICT COVERAGE. READ THE ENTIRE POLICY CAREFULLY TO DETERMINE RIGHTS, DUTIES AND WHAT IS AND IS NOT COVERED.

Throughout this policy the words "you" and "your" refer to the "named insured" shown in the Declarations and any other person or organization qualifying as a "named insured" under this policy.

The words "we", "us" and "our" refer to the company providing this insurance.

Words that appear in quotations in this policy have special meaning (see Section **V - DEFINITIONS** below).

SECTION I - COVERAGES

We will pay on behalf of the "insured" those sums in excess of the "retained limit" that the "insured" becomes legally obligated to pay as damages because of injury or damage to which this insurance applies.

Except as otherwise provided herein or endorsed to this policy, the insurance in this policy will follow the coverages, terms, representations, warranties, definitions, exclusions, conditions and limitations of the "followed policy" as of inception of this policy (subject to Section **IV.4.** below).

If any "underlying policy" includes any more restrictive coverage, terms, definitions, exclusions, conditions, or limitations, then this policy will follow the more restrictive provisions of any "underlying policy".

The amount we pay is limited as described in Section **III - LIMITS OF INSURANCE** below.

If any insurance provided by this policy would be in violation of any United States of America economic or trade sanctions, including, but not limited to, sanctions administered and enforced by the United States Treasury Department's Office of Foreign Assets Control ("OFAC"), then that insurance shall be null and void.

SECTION II - RETENTION

Our obligations in this policy shall only attach after the "retained limit" has in fact been exhausted by payment, in legal currency, of damages by or on behalf of the "underlying insurers". The risk of uncollectability with respect to any "underlying policy" or "underlying insurers" for any reason is expressly retained by the "insured", and is not insured under this policy or otherwise assumed by us.

This policy will not recognize the reduction or exhaustion of the "retained limit" due to payments of amounts with respect to any occurrences, claims, losses, damages or suits that are not insured under this policy.

If any "underlying policy" grants coverage subject to a sublimit of liability, this policy shall not afford such coverage, however this policy shall recognize any reduction or exhaustion of the "retained limit" by payments with respect to such coverage pursuant to that "underlying policy".

SECTION III – LIMITS OF INSURANCE

1. The amount stated as the aggregate limit of insurance in Item **3.B.** and, if applicable, **3.C.**, of the Declarations Page of this policy is the most we will pay for all damages insured under this policy.
2. Subject to **1.** above, the limit stated in Item **3.A.** of the Declarations Page of this policy is the most we will pay for all damages arising out of any one loss, occurrence, claim or event.
3. Defense costs and expenses shall operate in an identical manner to the "followed policy".

SECTION IV - CONDITIONS

1. **Headings**

   The words used in the headings of this policy are solely for convenience, and form no part of the terms and conditions of the insurance provided by this policy.

2. **Assistance and Cooperation**

   a. We shall have the same rights, privileges and protections afforded in the "followed policy". We shall also have the right, but not the obligation, to associate with the "insured" in the defense and settlement of any claim, suit or proceeding relative to an occurrence where a loss appears reasonably likely to involve us, in which event the "insured" shall co-operate with us in respect to the defense of such claim, suit or proceeding.

   b. Notwithstanding the foregoing, we will have the right and duty to defend any claim made or suit brought or proceeding instituted against an "insured" to which this policy applies if the applicable limits of "underlying policies" have been exhausted in accordance with **Section I – COVERAGE**.

3. **Changes to "Followed Policy"**

   a. We agree that we will follow:

      i) All changes made to the coverages, terms, representations, warranties, definitions, exclusions, conditions and limitations of the "followed policy" that do not broaden the scope of the insurance already provided; and

      ii) All additional "insured" and/or additional "named insured" changes subsequently endorsed on the "followed policy" that are not subject to an additional premium charge with respect to the "followed policy".

   b. Notwithstanding the foregoing, the following changes to the "followed policy" made after the inception date of this policy will not be binding on us unless we agree to them in writing:

      i) Any change that is subject to an additional premium charge; or

      ii) The inclusion of an additional coverage extension endorsement; or

      iii) Any other changes that broaden the scope of insurance already provided, except to the extent stated in **3.a.ii)** above.

4. **Maintenance of Underlying Insurance**

   You agree and represent that during the policy period:

   a. You will keep the "underlying policies" in full force and effect; and

   b. Any renewals or replacements of the "underlying policies" will provide equivalent insurance to, and afford limits of insurance equal to or greater than, the policy being renewed or replaced.

   If you fail to comply with these requirements, we will be liable only to the same extent that we would have been liable had you fully complied with these requirements, and the insurance in this policy will only apply as if such insurance and limits of insurance of the "underlying policies" were in place.

5. **Required Notices to Us by the Insured**

   As soon as practical, you shall give written notice to us of any:

   a. Occurrence, offense, claim or suit likely to involve this policy; and

   b. Change, cancellation or non-renewal of the "followed policy".

6. **Unimpaired Underlying Limits of Insurance**

   You warrant that the total limits as listed in the Schedule of Underlying Insurance shall be unimpaired as of the effective date of this policy. In the event such limits are impaired as of the effective date of this policy, this policy shall apply as if such limits of insurance were unimpaired. In the event of non-concurrent policy periods between this policy and any "underlying policies", only occurrences or claims that would be covered during the policy period of this policy shall be considered in determining the extent of any reduction or exhaustion of the underlying aggregate limits of insurance, and the insured shall retain liability for any resulting gap in insurance.

7. **Singular and Plural Form of a Word**

   If the singular or plural form of a word is used in this policy, such word shall also include the other form as required in the context of the sentence using such word, as appropriate, including the words contained in Section **V- DEFINITIONS** below (for example: "underlying policy" and "underlying policies").

8. **Service of Suit**

   It is agreed that in the event of our failure to pay any amount claimed to be due hereunder, we, at the request of the Insured, will submit to jurisdiction of a court of competent jurisdiction within the United States. Nothing in this condition constitutes or should be understood to constitute a waiver of our rights to commence an action in any court of competent jurisdiction in the United States, to remove an action to a United States District Court or to seek a transfer of a case to another court as permitted by the laws of the United States or any state in the United States. It is further agreed that service of process may be made upon us as provided in the Declarations with respect to Service of Suit, and that in any suit instituted against us, upon this policy, we will abide by the final decision of such court or of an appellate court in the event of an appeal.

   Further, pursuant to any statute of any state, territory, or district of the United States which makes provision therefore, we hereby designate the Superintendent, Commissioner, Director of Insurance, or other officer specified for that purpose in the statute, or his or her successor or successors in office as our true and lawful attorney upon whom may be served any lawful process in any action, suit or proceeding instituted by or on behalf of the Insured or any beneficiary hereunder arising out of this contract of insurance, and hereby designate the Counsel listed in the Declarations with respect to Service of Suit as the person to whom the said officer is authorized to mail such process or a true copy thereof.

SECTION V - DEFINITIONS

The following Definitions apply to this policy:

1. "Followed policy" means the policy listed in Item **4.** of the Declarations Page of this policy.
2. "Insured" means any person or organization that is an insured pursuant to the "followed policy".
3. "Named insured" means the person or entity listed in Item **1.** of the Declarations Page of this policy.
4. "Retained limit" means the total applicable limits of all "underlying policies".
5. "Underlying insurer" means any of the insurers that are listed in the schedule of underlying insurance of this policy.
6. "Underlying policy" means each policy listed in the Schedule of Underlying Insurance forming a part of this policy and any other applicable underlying insurance, including any self-insured retentions.

Berkshire Hathaway
Specialty Insurance

ENDORSEMENT

This endorsement, effective 12:01AM: **08/01/2017**
Forms a part of Policy No.: **47-XSF-304056-01**
Issued to: **The University Of Texas System**
By: **Berkshire Hathaway Specialty Insurance Company**

SCHEDULE OF UNDERLYING

THIS ENDORSEMENT CHANGES THE POLICY. PLEASE READ IT CAREFULLY.

This endorsement modifies insurance provided under the following:

FOLLOW FORM EXCESS LIABILITY POLICY

SCHEDULE OF UNDERLYING INSURANCE:
FOLLOWED POLICY:

Coverage Description	Insurer Policy Period Policy Number	Limits of Insurance Retentions Defense Treatment
General Liability	Zurich American Insurance Company 08/01/2017 to 08/01/2023 Policy #GLO 4353409-00	$2,000,000 Per Occurrence $5,000,000 Personal and Advertising Injury Limit $5,000,000 General Aggregate $5,000,000 Products-Completed Operations Aggregate Deductible Defense Treatment: Outside the Limit

UNDERLYING POLICY:

Coverage Description	Insurer Policy Period Policy Number	Limits of Insurance Retentions Defense Treatment
Employer's Liability	Zurich American Insurance Company 08/01/2017 to 08/01/2023 Policy #WC0183286	$1,000,000 Each Employee $1,000,000 Each Accident $1,000,000 Policy Limit Defense Treatment: Outside the Limit

All other terms and conditions of the policy remain unchanged.

Berkshire Hathaway
Specialty Insurance

ENDORSEMENT

This endorsement, effective 12:01AM:	**08/01/2017**
Forms a part of Policy No.:	**47-XSF-304056-01**
Issued to:	**The University Of Texas System**
By:	**Berkshire Hathaway Specialty Insurance Company**

VIOLATION OF COMMUNICATION OR INFORMATION LAW EXCLUSION

THIS ENDORSEMENT CHANGES THE POLICY. PLEASE READ IT CAREFULLY.

This endorsement modifies insurance provided under the following:

COMMERCIAL GENERAL LIABILITY POLICY
COMMERCIAL UMBRELLA LIABILITY POLICY
COMMERCIAL RETAINED LIMIT LIABILITY INSURANCE POLICY
FOLLOW FORM EXCESS LIABILITY POLICY

The following exclusion is added to the policy:

Violation of Communication or Information Law

This policy does not provide coverage for any act that violates any statute, ordinance or regulation of any federal, state or local government, including any amendment of or addition to such laws that prohibits or limits the sending, transmitting or communicating of material or information.

All other terms and conditions of the policy remain unchanged.

ENDORSEMENT

This endorsement, effective 12:01AM: **08/01/2017**
Forms a part of Policy No.: **47-XSF-304056-01**
Issued to: **The University Of Texas System**
By: **Berkshire Hathaway Specialty Insurance Company**

SECURITIES EXCLUSION

THIS ENDORSEMENT CHANGES THE POLICY. PLEASE READ IT CAREFULLY.

This endorsement modifies insurance provided under the following:

COMMERCIAL GENERAL LIABILITY POLICY
COMMERCIAL UMBRELLA LIABILITY POLICY
COMMERCIAL RETAINED LIMIT LIABILITY INSURANCE POLICY
FOLLOW FORM EXCESS LIABILITY POLICY
PRODUCTS/COMPLETED OPERATIONS LIABILITY POLICY

The following exclusion is added to the policy:

Securities

This policy does not provide coverage for any "bodily injury", "property damage" or "personal and advertising injury" arising out of:

1. Any violation of any securities law or similar law or any regulation promulgated thereunder;
2. The purchase, sale, offer of sale or solicitation of any security, debt, insurance policy, bank deposit or financial interest or instrument;
3. Any representations made at any time in relation to the price or value of any security, debt, insurance policy, bank deposit or financial interest or instrument; or
4. Any depreciation or decline in price or value of any security, debt, insurance policy, bank deposit or financial interest or instrument.

All other terms and conditions of the policy remain unchanged.

Berkshire Hathaway
Specialty Insurance

ENDORSEMENT

This endorsement, effective 12:01AM:	**08/01/2017**
Forms a part of Policy No.:	**47-XSF-304056-01**
Issued to:	**The University Of Texas System**
By:	**Berkshire Hathaway Specialty Insurance Company**

PRODUCTS COMPLETED OPERATIONS EXTENSION ENDORSEMENT

THIS ENDORSEMENT CHANGES THE POLICY. PLEASE READ IT CAREFULLY.

This endorsement modifies insurance provided under the following:

COMMERCIAL GENERAL LIABILITY POLICY
COMMERCIAL UMBRELLA LIABILITY POLICY
COMMERCIAL RETAINED LIMIT LIABILITY INSURANCE POLICY
FOLLOW FORM EXCESS LIABILITY POLICY
PRODUCTS/COMPLETED OPERATIONS LIABILITY POLICY

The following Condition is added to the policy:

With respect to the coverage provided by this policy for "bodily injury" and "property damage" that is included within the "products-completed operations hazard", an "occurrence" within Ten (10) years after a project is put to its intended use or a certificate of occupancy has been issued, whichever is earlier, will be treated as an "occurrence" within the policy period of this policy.

All other terms and conditions of this policy remain unchanged.

ENDORSEMENT

This endorsement, effective 12:01AM: **08/01/2017**
Forms a part of Policy No.: **47-XSF-304056-01**
Issued to: **The University Of Texas System**
By: **Berkshire Hathaway Specialty Insurance Company**

ACT OF TERRORISM SELF-INSURED RETENTION ENDORSEMENT

THIS ENDORSEMENT CHANGES THE POLICY. PLEASE READ IT CAREFULLY.

This endorsement modifies insurance provided under the following:

COMMERCIAL UMBRELLA LIABILITY POLICY
FOLLOW FORM EXCESS LIABILTY POLICY

The following apply with respect to any act of "terrorism":

I. This policy is subject to the following additional Self-Insured Retention:

Act of "Terrorism" Self-Insured Retention: $

II. We will have no duty to defend any "suit" against the "insured" with respect to any act of "terrorism". We will, however, have the right, but not the duty, to participate in the defense of any "suit" and the investigation of any claim to which this policy may apply. If we exercise this right, we will do so at our own expense.

III. The Act of "Terrorism" Self-Insured Retention is only reduced by the payment of damages. Expenses incurred to defend any "suit" or to investigate any claim will not erode or exhaust the Act of "Terrorism" Self-Insured Retention.

IV. As used in this endorsement "terrorism" means:

(1) any act that is certified by the United States Secretary of the Treasury, in consultation with the United States Secretary of Homeland Security, and United States Attorney General, to be an act of "terrorism" pursuant to the Terrorism Risk Insurance Act of 2002, including all amendments thereto; or

(2) activities against persons, organizations or property of any nature, including any actions in hindering, defending against, responding to or retaliating against an actual or suspected activities:

a. That involve the following or preparation for the following:

I. Use or threat of force or violence; or

II. Commission or threat of a dangerous act; or

III. Commission or threat of an act that interferes with or disrupts an electronic,

communication, information, or mechanical system; and

b. When one or both of the following applies:

I. The effect is to intimidate or coerce a government or the civilian population or any segment thereof, or to disrupt any segment of the economy; or

II. It appears that the intent is to intimidate or coerce a government, or to further political, philosophical, ideological, religious, social, economic, or similar type objectives or positions, or to express (or express opposition to) any such objectives, positions, ideas or beliefs.

V. Coverage does not apply, however, with respect to any "bodily injury", "property damage", "personal and advertising injury" or any other loss, cost, defense fee, expense, injury, damage, claim, dispute or "suit" that is otherwise excluded and/or not insured by this policy, including, but not limited to, any exclusions with respect to war, nuclear liability, or "terrorism", in whole or in part.

All other terms and conditions of this policy remain unchanged.

Berkshire Hathaway
Specialty Insurance

ENDORSEMENT

This endorsement, effective 12:01AM:	**08/01/2017**
Forms a part of Policy No.:	**47-XSF-304056-01**
Issued to:	**The University Of Texas System**
By:	**Berkshire Hathaway Specialty Insurance Company**

WORKERS' COMPENSATION AND SIMILAR LAWS EXCLUSION

THIS ENDORSEMENT CHANGES THE POLICY. PLEASE READ IT CAREFULLY.

This endorsement modifies insurance provided under the following:

FOLLOW FORM EXCESS LIABILITY POLICY

The following exclusion is added the policy:

Workers' Compensation And Similar Laws

This insurance does not apply to any "bodily injury", "property damage", "personal and advertising injury" or any other loss, cost, defense fee, expense, injury, damage, claim, dispute or "suit" caused by, resulting from, or with respect to any obligation of the insured under a workers' compensation, disability benefits or unemployment compensation law or any similar law.

All other terms and conditions of this policy remain unchanged.

Includes copyrighted material of Insurance Services Office, Inc., with its permission.

ENDORSEMENT

This endorsement, effective 12:01AM:	**08/01/2017**
Forms a part of Policy No.:	**47-XSF-304056-01**
Issued to:	**The University Of Texas System**
By:	**Berkshire Hathaway Specialty Insurance Company**

CONFIDENTIAL OR PERSONAL INFORMATION DISCLOSURE EXCLUSION ENDORSEMENT

THIS ENDORSEMENT CHANGES THE POLICY. PLEASE READ IT CAREFULLY.

This endorsement modifies insurance provided under the following:

FOLLOW FORM EXCESS LIABILITY POLICY

I. The following exclusion is added to the policy:

Confidential or Personal Information Disclosure Exclusion

This policy does not apply to "bodily injury", "property damage", "personal and advertising injury", or any other loss, cost, defense fee, expense, injury, damage, claim, dispute or "suit", however caused, in whole or in part arising out of, resulting from, or in any way related to any actual or alleged:

a. unauthorized or improper access to, collection, use or disclosure of, or failure to protect any non-public confidential or personal information in the form of "electronic data", including, but not limited to, any patents, trade secrets, processing methods, customer lists, financial information, credit card information, health information, or any other type of non-public information;

b. violation of any statute, regulation, common-law, or any other law regulating or protecting access to, collection, use or disclosure of, or failure to protect any non-public confidential or personal information in the form of "electronic data".

For purposes of this endorsement, "electronic data" includes, but is not limited to, information, facts or programs stored as or on, created or used on, or transmitted to or from computer software, including systems and applications software, hard or floppy disks, CD-ROMS, tapes, drives, cells, data processing devices or any other media which are used with electronically controlled equipment.

This exclusion applies to, among other things, damages or amounts associated with any notification costs, credit monitoring expenses, forensic expenses, public relations expenses, or any other loss, cost or expense, whether incurred by you or others, arising out of any access to, collection, use or disclosure of, or failure to protect any non-public confidential or personal information that is subject to this exclusion.

This exclusion does not apply, however, to:

a. "Direct bodily injury", which, for purposes of this endorsement only means: bodily injury, sickness or disease sustained by a person, including death, mental anguish, mental injury, shock or humiliation resulting from any of these at any time; or

b. "Direct property damage", which, for purposes of this endorsement only means: physical injury to tangible property, including all resulting loss of use of that property. All such loss of use shall be deemed to occur at the time of the physical injury that caused it.

Tangible property does not include any information, facts, programs, instructions, commands, electronic data, and anything else stored as or on, created or used on, or transmitted to or from computers or their software, including, but not limited to, systems and applications software, hard or floppy disks, CD-ROMs, tapes, drives, cells, data processing devices, networks, clouds, or other media used with electronically controlled equipment.

All other terms and conditions of this policy remain unchanged.

Berkshire Hathaway
Specialty Insurance

ENDORSEMENT

This endorsement, effective 12:01AM: **08/01/2017**
Forms a part of Policy No.: **47-XSF-304056-01**
Issued to: **The University Of Texas System**
By: **Berkshire Hathaway Specialty Insurance Company**

CAP ON LOSSES FROM CERTIFIED ACTS OF TERRORISM

THIS ENDORSEMENT CHANGES THE POLICY. PLEASE READ IT CAREFULLY.

This endorsement modifies insurance provided under the following:

COMMERCIAL GENERAL LIABILITY POLICY
HEALTHCARE PRIMARY LIABILITY POLICY
COMMERCIAL UMBRELLA LIABILITY POLICY
HEALTHCARE UMBRELLA LIABILITY POLICY
COMMERCIAL RETAINED LIMIT LIABILITY POLICY
FOLLOW FORM EXCESS LIABILITY POLICY
PRODUCTS/COMPLETED OPERATIONS LIABILITY POLICY
POLLUTION LEGAL LIABILITY POLICY

If aggregate insured losses attributable to terrorist acts certified under the federal Terrorism Risk Insurance Act exceed $100 billion in a Calendar Year and we have met our insurer deductible under the Terrorism Risk Insurance Act, we shall not be liable for the payment of any portion of the amount of such losses that exceeds $100 billion, and in such case insured losses up to that amount are subject to pro rata allocation in accordance with procedures established by the Secretary of the Treasury.

"Certified act of terrorism" means any act that is certified by the United States Secretary of the Treasury, in consultation with the United States Secretary of Homeland Security, and the United States Attorney General, to be an act of terrorism pursuant to the federal Terrorism Risk Insurance Act. The criteria contained in the Terrorism Risk Insurance Act for a "certified act of terrorism" include the following:

1. The act resulted in insured losses in excess of $5 million in the aggregate, attributable to all types of insurance subject to the Terrorism Risk Insurance Act; and
2. The act is a violent act or an act that is dangerous to human life, property or infrastructure and is committed by an individual or individuals as part of an effort to coerce the civilian population of the United States or to influence the policy or affect the conduct of the United States Government by coercion.

All other terms and conditions of this policy remain unchanged.

Includes copyrighted material of Insurance Services Office, Inc., with its permission.

Berkshire Hathaway
Specialty Insurance

ENDORSEMENT

This endorsement, effective 12:01AM:	**08/01/2017**
Forms a part of Policy No.:	**47-XSF-304056-01**
Issued to:	**The University Of Texas System**
By:	**Berkshire Hathaway Specialty Insurance Company**

COMPOSITE RATE ENDORSEMENT

THIS ENDORSEMENT CHANGES THE POLICY. PLEASE READ IT CAREFULLY.

This endorsement modifies insurance provided under the following:

FOLLOW FORM EXCESS LIABILITY POLICY

The premium for this policy will be computed upon a composite basis as shown in the **Premium Schedule** below in accordance with our rules, rates, rating plans, premiums and minimum premiums and the other policy terms.

PREMIUM SCHEDULE

BUSINESS CLASSIFICATION DESCRIPTION	EXPOSURE BASIS	ESTIMATED EXPOSURE	PREMIUM BASIS (PER)	RATE	TOTAL ADVANCE PREMIUM	MINIMUM PREMIUM
	Construction Value					

I. The following **Project Notification Condition** is added to the policy and supersedes anything to the contrary:

You shall provide notification to us of the addition of each project to which this policy shall apply. Notification shall be provided in accordance with the notification terms of the "followed policy" and at the same time as such notice is provided to the issuing insurer of the "followed policy".

II. The following definitions apply to this endorsement:

The term "**construction value**" has the same definition of the "followed policy."

When "policy period" is not defined in the policy, it means the policy period as stated on the Declarations Page of the policy.

All other terms and conditions of this policy remain unchanged.

Berkshire Hathaway
Specialty Insurance

ENDORSEMENT

This endorsement, effective 12:01AM:	**08/01/2017**
Forms a part of Policy No.:	**47-XSF-304056-01**
Issued to:	**The University Of Texas System**
By:	**Berkshire Hathaway Specialty Insurance Company**

LIMITS OF INSURANCE CONSTRUCTION MODIFICATION

THIS ENDORSEMENT CHANGES THE POLICY. PLEASE READ IT CAREFULLY.

This endorsement modifies insurance provided under the following:

FOLLOW FORM EXCESS LIABILITY POLICY

I. **Item 3. Limits of Insurance** as found on the Declarations page is deleted and replaced with the following:

Item 3. Limits of Insurance:

A. Per Occurrence:	**$25,000,000**
B. Aggregate Limit of Insurance (Except Auto):	**$25,000,000**
C. Products-Completed Operations Aggregate Limits of Insurance:	
1. Per Project Products-Completed Operations Aggregate Limit of Insurance (Applicable to Each Construction Project With Construction Value In Excess of $100,000,000):	**a. $25,000,000 (During the Policy Period); and** **b. $25,000,000 (Products-Completed Operations Extension Period)**

2. **Single Total Products-Completed Operations Aggregate Limit of Insurance (Applicable to All Construction Projects With Construction Value of $100,000,000 or Less):**	a. **$25,000,000 (During the Policy Period); and** b. **$25,000,000 (Products-Completed Operations Extension Period)**
3. **Policy Aggregate Products-Completed Operations Maximum Limit:**	**$125,000,000**

II. **SECTION III – LIMITS OF INSURANCE** is deleted in its entirety and replaced with the following:

1. The amount stated as the Aggregate Limit of Insurance in Item **3.B.** of the Declarations Page of this policy is the most we will pay for all damages not included within the "products-completed operations hazard" and insured under this policy. Item **3.B.** shall apply in the same manner as the corresponding aggregate limit of liability in the "followed policy", including on a per project or per location basis.

2. The amounts stated as the Products-Completed Operations Aggregate Limits of Insurance in Item **3.C.** of the Declarations Page of this policy is the most we will pay for all damages included within the "products-completed operations hazard" and insured under this policy. These Limits of Insurance apply as follows:

   A. Items **3.C.1.a.** and **b.**:

   (1) Subject to **3.C.3.**, the Limit of Insurance stated in **3.C.1.a.** is the most we will pay for all damages:

   a. Because of "bodily injury" or "property damage" included within the "products-completed operations hazard" that occurs during the policy period; and

   b. Arising out of projects that have a Construction Value in excess of $100,000,000.

   Item **3.C.1.a.** applies separately to each insured project.

   (2) Subject to **3.C.3.**,the Limit of Insurance stated in **3.C.1.b.** is the most we will pay for all damages:

   a. Because of "bodily injury" or "property damage" included within the "products-completed operations hazard" that first occurs during the "products-completed operations hazard" extension period; and

   b. Arising out of projects that have a Construction Value in excess of $100,000,000.

   Item **3.C.1.b.** applies separately to each insured project.

   B. Item **3.C.2.a.** and **b.**:

   (1) Subject to **3.C.3.**,the Limit of Insurance stated in **3.C.2.a.** is the most we will pay for all damages:

   a. Because of "bodily injury" or "property damage" included within the "products-completed operations hazard" that occurs during the policy period; and

b. Arising out of projects that have a Construction Value of $100,000,000 or less.

Item **3.C.2.a.** applies to all insured projects with Construction Value of $100,000,000 or less regardless of the number of such projects. Under no circumstances shall Item **3.C.2.a.** apply on a per project or per location basis.

(2) Subject to **3.C.3.**, the Limit of Insurance stated in **3.C.2.b.** is the most we will pay for all damages:

a. Because of "bodily injury" or "property damage" included within the "products-completed operations hazard" and that occurs during the "products-completed operations hazard" extension period; and

b. Arising out of projects that have a Construction Value in excess of $100,000,000.

Item **3.C.2.b.** applies to all insured projects with Construction Value of $100,000,000 or less regardless of the number of such projects. Under no circumstances shall Item **3.C.2.b.** apply on a per project or per location basis.

C. Item **3.C.3.**:

The Limits of Insurance stated in Items **3.C.1.** and **3.C.2.** shall be subject to the Policy Aggregate Products-Completed Operations Maximum Limit stated in **3.C.3.** The Policy Aggregate Products-Completed Operations Maximum Limit is the most we will pay under this policy for all damages to which this policy applies included within the "products-completed operations hazard".

Our duties and obligations under this policy shall terminate and cease once this Policy Aggregate Products-Completed Operations Maximum Limit is reached.

Under no circumstances shall Item **3.C.3.** apply on a per project or per location basis. This Policy Aggregate Maximum Products-Completed Operations Limit is the most we will pay for all damages within Item **3.C.** insured under this policy regardless of the number of "insureds"; claims made or "suits" brought; persons or organizations bringing claims or "suits"; projects or locations; losses; occurrences; claims; events or any other similar basis upon which a Limit of Insurance may be calculated.

3. The Products-Completed Operations Limits of Insurance stated in Item **3.C.** shall not reinstate on an annual basis.

4. Subject to the paragraphs **1.** and **2.** above, the limit stated in Item **3.A.** of the Declarations Page of this policy is the most we will pay for all damages arising out of any one loss, occurrence, claim or event.

5. Defense costs and expenses shall operate in an identical manner to the "followed policy".

6. As used herein, Construction Value shall have the same meaning as used in the **Composite Rate Endorsement** attached to this policy.

All other terms and conditions of this policy remain unchanged.

ENDORSEMENT

This endorsement, effective 12:01AM: **08/01/2017**
Forms a part of Policy No.: **47-XSF-304056-01**
Issued to: **The University Of Texas System**
By: **Berkshire Hathaway Specialty Insurance Company**

ISSUANCE OF FOLLOW FORM EXCESS POLICY PRIOR TO ISSUANCE OR RECEIPT OF THE FOLLOWED POLICY

THIS ENDORSEMENT CHANGES THE POLICY. PLEASE READ IT CAREFULLY.

This endorsement modifies insurance provided under the following:

FOLLOW FORM EXCESS LIABILITY POLICY

This policy has been issued on the basis that it is following the same terms, warranties, definitions, exclusions, conditions and limitations (except to the extent altered by endorsement to this policy) that are contained in the "followed policy" whose binder is dated 07/28/2017 and is attached to this endorsement.

Once the "followed policy" is/are issued to the Insurer for review, any difference in coverage between the binder and the "Followed Underlying Policy" which does not fall within Section **IV – CONDITIONS** paragraph **3.a.** will not be binding upon the Insurer unless agreed to by the Insurer in writing.

Upon satisfactory review of the "followed policy" by the Insurer, an endorsement will be issued to this Policy deleting this endorsement and attached binder(s) in its entirety and endorsing this Policy, if necessary.

All other terms and conditions of this policy remain unchanged.

Rolling Owner Controlled Insurance Program

Binder
WC0183286 & GLO0183287

The Board of Regents of
The University of Texas System
Office of Risk Management
Phase VII

Program Term

08/01/17 to 08/01/2023

Submitted to

Marsh USA Inc.

On

July 28, 2017

This Binder was prepared by:
Brenda Lemont
Telephone: (214) 866-1194
Email: Brenda.lemont@zurichna.com

THIS PROPOSAL EXPIRES ON THE EFFECTIVE DATE. THIS IS A PROPOSAL FOR INSURANCE. THIS IS NOT AN INSURANCE POLICY. ANY COVERAGE DESCRIPTION SHOWN MAY BE AN ABBREVIATED TITLE AND DOES NOT INDICATE IN-FORCE COVERAGE. ONLY THE POLICY ITSELF PROVIDES COVERAGE. THIS PROPOSAL IS NOT A PART OF AND IS NOT INCORPORATED INTO THE INSURANCE POLICY. IF THERE IS ANY CONFLICT BETWEEN THE COVERAGE DESCRIPTIONS SHOWN IN THIS PROPOSAL AND THE ACTUAL INSURANCE POLICY, THE INSURANCE POLICY PREVAILS. THE INSURANCE POLICY SUPERSEDES THIS PROPOSAL.

THIS PROPOSAL IS PRESENTED TO YOU WITH THE UNDERSTANDING THAT NEITHER ZURICH NOR ANY OF ITS SUBSIDIARIES, AFFILIATES, OR EMPLOYEES, OFFER, OR PURPORT TO OFFER, ADVICE TO YOU CONCERNING THE PROPER FINANCIAL, ACCOUNTING, OR TAX TREATMENT FOR THE POLICY(IES) OF INSURANCE REFERENCED HEREIN AND NOTHING HEREIN SHOULD BE CONSIDERED TO CONSTITUTE SUCH ADVICE. IF ACCOUNTING ADVICE, TAX ADVICE, OR OTHER EXPERT PROFESSIONAL ASSISTANCE IS REQUIRED, YOU SHOULD CONSULT WITH YOUR OWN ACCOUNTANT, ADVISER, COUNSEL, OR OTHER SIMILAR COMPETENT PROFESSIONAL WITH EXPERTISE IN THE REQUIRED AREA.

If you want to learn more about the compensation Zurich pays agents and brokers visit: http://www.zurichnaproducercompensation.com or call the following toll-free number: (866) 903-1192. This Notice is provided on behalf of Zurich American Insurance Company and its underwriting subsidiaries

Zurich's Qualifications & Experience

Zurich in North America – Construction is a member of Zurich Financial Services Group, a global insurer offering product innovation, competitive pricing and tailored services. A.M. Best, one of the industry's independent and definitive resources for evaluating insurers' ability to meet their obligations, rates Zurich as an A company.

Zurich in North America – Construction is a dedicated construction underwriting group that provides insurance and services for both Owner and Contractor Controlled Insurance Programs.

Zurich in North America – Construction has written numerous Owner Controlled Insurance Programs, covering projects as diverse as retail shopping centers, office buildings, school districts, stadiums, airports, bridges and highways, hospitals and petrochemical complexes, with terms extending through 2011. In addition, we are a major market for the Top ENR Commercial General Contractors.

Our account management philosophy allows us to work with you to tailor services to meet your needs and our synergistic service approach brings together into one cohesive team the disciplines of underwriting, claims, risk engineering and premium audit. This team effort results in efficient and effective communications and enhanced customer service.

ACCOUNT SERVICE TEAM

RESPONSIBILITY	CONTACT	PHONE
Regional Vice President	Wayne Hanson	(214) 866-1353
Dallas Construction Manager	Aaron Jackson	(214) 866-1618
Senior Account Executive	Brenda Lemont	(214) 866-1194
Underwriting Assistant	Nancy Gardner	(214) 866-1276
Risk Engineering Account Coordinator	Bill Hornback	(972) 377 6910
Construction Claims Consultant	Cheri Perches	(281) 380-5400
Sr. WC Specialist	Desiree Martyn	(214) 866-1120
Sr. GL Specialist	Vickie Jacobsen	(214) 866-1152
Premium Audit Coordinator	Melissa Julifs	(847) 413-5358

PROGRAM SUMMARY

Paid Loss Deductible Program

Deductible Parameters	Option 1
Construction Value	
WC Deductible Per Occurrence	
GL Deductible Per Occurrence	
Clash Deductible Per Occurrence	
Basket Deductible Aggregate Amount Minimum 100% (GL and WC)	
Basket Deductible Aggregate Rate per $1000 CV	

Deductible Rates and Estimated Premium:

Primary Parameters	Option 1
WC Fixed Rate Per $ 1000 of CV	
GL Fixed Rate Per $1000 of CV	
WC Premium (50% Minimum)	
GL Premium (50% Minimum)	
Total Program Premium (Excluding TRIA/ Assessments/Surcharges/EC)	
Total Program Premium Rate Per $1000of CV	
Estimated Assessments, Surcharges, and Expense Constant (150 x 5 years)	
Terrorism (WC mandatory - est. $.02 per $100 of WC payroll)	
DTEC – Not applicable at this time	
Terrorism (GL mandatory – 1% of GWP)	
Total Program Premium Including TRIA/ Assessments/ etc	

****All Rates and Premiums are excluding TRIA, DTEC or other Assessments**

We will adjust premium once enrolled Construction Values exceed $3 Billion. We can change this once UT determines how they want to proceed with volume and payments.

Loss Picks

Deductible Parameters	Option 1	Option 2
Deductible		
WC Loss Pick		
GL Loss Pick		
Combined Loss Pick		

PROGRAM SUMMARY CON'T

COMMENTS / RESTRICTIONS :

This Proposal describes the coverage, terms and conditions offered by the Company. Please review them carefully as they may differ from the specifications requested in the submission.

- **This proposal is subject to a review of the campus requirements to participate in the ROCIP through OFPC. All Campuses shall follow and adhere to OFPC Health and Safety Programs, Plans, Best Practices and Guidelines to include those UT campuses that elect to opt out of OFPC oversight. I understand that OFPC safety standards and requirements will be in place for all enrolled projects and this is acceptable to Zurich.**
- **Temporary labor staffing firms and PEO's or leasing companies must meet the same criteria as UT has outlined for Phase VI in the ROCIP manual. No day laborers or unskilled workers will be utilized.**
- **Marsh and UT will work with Zurich to create a form that contains appropriate information for claim reporting.**
- General Aggregate Limits are per project and reinstate annually.
- **Products and Completed Operations Aggregate Limit** will apply as follows: The Products-Completed Operations Aggregate Limit will apply separately to each project with construction value equal or greater than $100,000,000 subject to an overall Aggregate of $25,000,000. All projects with construction value under $100,000,000 will share a Products-Completed Operations Aggregate limit. A separate limit will be applied for the ECO period but ALL limits are still aggregated at $25,000,000.
- GL rates include 10 years of Extended Completed Operations or Statute of Repose, whichever is less.
- Rates include 1875 hours of R.E. services as currently provided under Phase VI. As an example this includes Weekly PSC safety calls, Monthly ROCIP meetings, Quarterly UTSW meetings, Monthly RECATS, Knowledge transfer, Claim reviews, Site visits, Quarterly webinars, UTMB Galveston Quarterly meetings.
- Rates also include 1250 hours of services to be customized with Zurich Risk Engineering over the next few weeks if we are successful binding coverage.
- These hours only apply to Phase VII projects and include services such as Industrial Hygiene, QA/QC, Weather and Water Intrusion seminars, Wet Work Permit program seminars, Large Loss Lessons Learned seminars, XRAY, ZHA, Construction Safety Leadership seminar – this is just a sampling of services that can be provided.
- These are services that are available but not convertible to cash or refund and not available to roll over into the next phase.
- As respects the Subcontractor policies, terms and conditions may change due to the effective date that the Subcontractors' Workers' Compensation policy is issued in order to comply with all states regulatory form editions applicable at inception of the policy.
- Statutorily required endorsements will be included for the applicable states.
- This program does not contemplate any residential exposure other than college dormitories that are not for sale.
- Enrollment in the Workers' Compensation program automatically enrolls the subcontractor in the General Liability portion of the program. If a subcontractor is not enrolled in the Workers' Compensation program there will be no coverage provided under the General Liability program until such time as that subcontractor is specifically approved and endorsed onto the General Liability policy by the Zurich underwriter.
- The term of the Project is 72 months with a Provisional Review Clause effective at 4 years and 6 months after inception of the policy. The review will be calculated and presented prior to inception of the 5th year and any changes will be effective from years 5 through expiration of the program. The cap for increase will be 5%.
- Any projects enrolled should be completed by the end of the 72 months.

- Any wet exposures developed after inception will have separate rates applied at 150% of the composite rate.
- Estimated exposures are subject to physical audit to determine actual policy premiums. Audits will be performed at our discretion during the project and at project completion.
- Broker will provide Zurich with a CV/payroll report on an annual basis or as otherwise determined.
- Broker will provide Zurich with final completion document as each project completes.
- We reserve the right to renegotiate our rates based on a change in exposure, scope or benefit rate changes. Scope is defined as change from description of construction as detailed in submission.
- Deductible Agreement, Specifications to Deductible Agreements signed must be and received by Zurich within 30 days of binding. Collateral, if any, must be received with 30 days of binding to avoid cancellation.
- WC & GL Allocated Loss Adjustment Expenses (ALAE) Will erode the Deductible Limit.
  WC & GL Allocated Loss Adjustment Expenses (ALAE) Will erode the Deductible Aggregate
- WC & GL Allocated Loss Adjustment Expenses (ALAE) is Outside the Policy Limits
- **Composite Rating is based on Construction Value as defined in proposal.**

OCIP BEST PRACTICES

The coverages provided under this proposal are expressly conditioned upon the insured's incorporation of specific loss control and health & safety requirements in the written contract documents and safety plan for all enrolled projects as follows:

1. 100% Fall Protection for any worker exposed to a 6 foot fall, during all phases of the project.

2. Pre-Employment, Reasonable Suspicion, Probable Cause, and Post Accident Drug testing for all enrolled contractors. Project specific underwriting exception is required for enrollment of any project requiring less than this Substance Abuse Program scope.

3. The insured or their designee will provide an Orientation to all employees prior to their performance of work on the project.

4. The insured will implement a Return-to-Work program which contractually requires its contractors and all subcontractors to provide modified duty positions for injured employees to the fullest extent permitted by law.

5. Contracts should provide for vertical waivers to all other contractors for any loss associated with property damage under construction.

6. EMR's will be reviewed as part of the existing UT selection process, where EMR's are currently reviewed over 1.25. Any EMR higher than 1.25 will be subject to additional review by the underwriter who will be notified of the matter as per the UT process. Such review will take place within 2 business days and prior to enrollment. If the underwriter is not available, the UT team will contact Angela Skow at 214.866.1269 or 469.713.7034.

7. Timely enrollment of subcontractors into the program must be adhered too. A subcontractor should not be onsite working unless enrollment has been processed and all orientation procedures have been followed. Enrollment should not be processed until the contractor is ready to start work at the site. All late enrollments that result in backdating of coverage will need a No Known Loss Letter on the contractors letterhead **and signed by a corporate officer of the legal entity,** and prior approval by the underwriter before processing for enrollment.

   KNLL Sample wording: This is to verify that no person, organization, member or other legal entity of [Insert Name of Entity requesting enrollment] has received any demand or suit against us, and no person, organization, member or other legal entity of [Insert Name of Entity requesting enrollment] knows of any facts, circumstances or accidents which may reasonably be expected to result in a Workers Compensation or General Liability claim from [insert proposed

enrollment date] to the date of this letter.

8. Enrollment process: Administrator must submit complete enrollment documents to the Zurich Wrap Up unit in Schaumburg, ILL.

   email at construction.wrapupteam@zurichna.com
   fax number to the construction mailbox: 866-947-3464
   phone number: 847-230-2501 key contact Ruth Brannon
   Direct all enrollments to this mailbox and within 24 business hours you will receive the needed policy numbers and the policy will be forwarded to you for electronic distribution to the contractor within thirty business days.

With respect to 1 through 7 above, Zurich reserves the right to cancel the program for Non-Compliance.

Treatment of ALAE

For Non-Residential Projects Only

- WC & GL Allocated Loss Adjustment Expenses (ALAE) will erode the Deductible Limit.
- WC & GL Allocated Loss Adjustment Expenses (ALAE) will erode the Aggregate Limit
- WC & GL Allocated Loss Adjustment Expenses (ALAE) is Outside the Policy Limits

Definition of Residential Building:

"Residential building construction" means "your work" including construction, reconstructing, remodeling or repair for
(a) Any single family or multi-family dwelling, including but not limited to houses, townhomes, townhouses, condominiums, cooperatives, duplexes, triplexes, fourplexes or apartments;
(b) Any structure that combines any other use with "residential building construction" as described in Paragraph (a) above, provided such structure contains **20%** or more of the occupancy by square footage indicated in Paragraph (a) above; and
(c) Any other structure, improvement or grading of land which is attached to or ancillary to any structure identified in Paragraphs (a) or (b) above,

"Residential building construction" does not include "your work" for any structure that functions solely as time shares, a hotel, a motel, a nursing home, an assisted living senior housing care facility, a college campus dormitory or government housing on military bases.

Named Insured - WC:

The Board of Regents of the University of Texas System

ALL CONTRACTORS OF ANY TIER ENROLLED IN THE CONTROLLED INSURANCE PROGRAM AND WHO PERFORM WORK AT A DESIGNATED PROJECT SITE AS DEFINED IN THE DESIGNATED WORKPLACE EXCLUSION ENDORSEMENT (WC 00 03 02).

UNLESS OTHERWISE ENDORSED ON THIS POLICY, NO COVERAGE WILL BE PROVIDED TO VENDORS, SUPPLIERS, MATERIAL DEALERS, DEMOLITION, ABATEMENT CONTRACTORS, OR OTHER HAZARDOUS WASTE REMOVAL CONTRACTORS WHO VISIT, MAKE DELIVERIES TO OR WORK TEMPORARILY AT THE PROJECT SITE(S).

Named Insured - GL:

This endorsement modifies insurance provided under the:

Commercial General Liability Coverage Part

A. The following is added to Section **II – Who Is An Insured**:

1. Subject to Paragraph **2.** below, a contractor of any tier will qualify as a Named Insured, if such contractor:

a. Is enrolled in the Owner Controlled Insurance Program for which this policy is provided; and

b. Performs operations at a "designated project".

2. Unless added by separate endorsement, the following are not an insured under this policy:

a. Vendors, suppliers, material dealers, abatement contractors, blasting contractors, delivery persons, haulers, hazardous waste removal contractors;

b. Any person or organization that manufactures or fabricates products or components outside the "designated project" that does not also install the product or component at the "designated project"; or

c. Other than the persons or organizations referenced in **3.** below, any contractor or other person or organization that does not have dedicated payroll for employees on-site at the "designated project".

3. The person or organization shown in the Declarations of this policy and their subsidiaries, associated and affiliated companies, successors, or assigns, as now exist or may hereafter be acquired or formed, and any corporation or other business organization which the person or organization shown in the Declarations of this policy owns, operates or controls, including the interest as successor to any corporation or other business organization acquired, merged, or transformed into any of the foregoing, and other interests as are now or hereafter related to the person or organization shown in the Declarations of this policy are not insured for "bodily injury", "property damage" or "personal and advertising injury" arising from their own acts or omissions. Such persons or organizations are Named Insureds only for liability arising from:

a. The acts or omissions of the Named Insureds described in Paragraph **1.** above; or

b. The acts of "employees" as insureds as provided in Paragraph **B.** below, but only while those "employees" are performing duties solely related to construction activities at the "designated project".

B. Solely with respect to the person or organization designated in Paragraph **A.3.** of this endorsement, Paragraph **2.a.** of Section **II – Who Is An Insured** is replaced by the following:

2. Each of the following is also an insured:

ZURICH

a. Your "employees", other than either your "executive officers" (if you are an organization other than a partnership, joint venture or limited liability company) or your managers (if you are a limited liability company), but only for acts within the scope of their employment by you while performing duties solely related to construction activities at the "designated project". However, none of these "employees" are insureds for:

(1) "Bodily injury" or "personal and advertising injury":

(a) To you, to your partners or members (if you are a partnership or joint venture), to your members (if you are a limited liability company), to a co-"employee" while in the course of his or her employment or performing duties related to the conduct of your business;

(b) To the spouse, child, parent, brother or sister of that co-"employee" as a consequence of Paragraph **(1)(a)** above;

(c) For which there is any obligation to share damages with or repay someone else who must pay damages because of the injury described in Paragraphs **(1)(a)** or **(b)** above; or

(d) Arising out of his or her providing or failing to provide professional health care services.

(2) "Property damage" to property:

(a) Owned, occupied or used by;

(b) Rented to, in the care, custody or control of, or over which physical control is being exercised for any purpose by;

you, any of your "employees", any partner or member (if you are a partnership or joint venture), or any member (if you are a limited liability company).

C. For purposes of this endorsement, "designated project" is defined in the Limitation of Coverage to Designated Project(s) endorsement (U-GL-1305) attached to this Coverage Part.

All other terms and conditions of this policy remain unchanged.

Project Location:

General Liability:

Project: All construction operations associated with the project(s) endorsed on to this policy via the Limitation of Coverage to Designated Project endorsement/Schedule.

Designated Project(s): Refer to Monthly Report in file which includes each project identified in the Marsh Monthly Report for the University of Texas System Rolling Owner Controlled Insurance Program Phase VII with coverage for such project beginning on the notice to proceed date as listed in the Report.

"Designated Project" means:

The projects shown on the Designated Project Declarations endorsement, including operations on and off the project site or location that are necessary or incidental to the project as described in contract documents. "Designated Project" includes the work site(s) associated with such "designated project(s)" and any offsite staging areas, as long as they are dedicated solely to the "designated project(s)". Also included are those areas immediately adjacent to the "designated projects", including boundaries of local streets or public easement, in which the enrolled subcontractors at any tier perform work under their respective contracts.

ZURICH

COMMERCIAL GENERAL LIABILITY COVERAGE

Issuing Company: Zurich American Insurance Company

Policy Number:

COVERAGE (Coverage is Based on General Liability Form CG 0001 ED 1204)	LIMITS
General Aggregate Limit (Other than Products – Completed Operations)	$5,000,000
Product-completed Operations Aggregate Limit	$5,000,000
Personal and Advertising Injury Limit (Any One Person or Organization)	$2,000,000
Each Occurrence Limit	$2,000,000
Fire Legal Liability (Any One Fire)	$250,000
Medical Expense Limit (Any One Person)	$10,000

Program Structure	Retention	Retention Applies Per:	ALAE	Aggregate Applies
Paid Loss Deductible		Occurrence	Included	Yes

COMMENTS
This proposal includes only the coverage terms outlined in the attached Forms Checklist.

ZURICH

ENDORSEMENTS, EXCLUSIONS & CONDITIONS

Note: All state mandatory forms will be added in addition to those listed below, and the most current approved edition date will be used, unless otherwise noted.

OWNER ROLLING OR MULTI SITE

COMMON POLICY FORMS AND ENDORSEMENTS	
U-GL-1114-A CW	NAMED INSURED – OWNER CONTROLLED INS PROGRAM – Manuscript amended wording
U-GL-1175-E CW	ADDITIONAL INSURED – AUTOMATIC-OWNERS, LESSEES OR CONTRACTORS
U-GU-621-A **DELETED**	SCHEDULE OF NAMED INSURED(S) **Not needed because of UGL1114A above.**
U-GU-619-A	SCHEDULE OF FORMS AND ENDORSEMENTS
U-GU-406-A	INSTALLMENT PREMIUM SCHEDULE ***PER INVOICE – Payment terms TBD.***
U-GU-319-F	IMPORTANT NOTICE-IN WITNESS CLAUSE
U-GU-630-C	DISCLOSURE OF IMPORTANT INFORMATION RELATING TO TERRORISM
U-GU-767-A CW	CAP ON LOSSES FROM CERTIFIED ACTS OF TERRORISM
CG 00 01	COMMERCIAL GENERAL LIABILITY COV FORM
U-GU-D-310-A	COMMON POLICY DECLARATIONS
IL 00 17	COMMON POLICY CONDITIONS
IL 00 21	NUCLEAR ENERGY LIABILITY EXCLUSION
IL 00 03	CALCULATION OF PREMIUM
U-GL-D-1115-B CW	COMM GEN LIAB COV PART SUPP. DEC.
GENERAL LIABILITY FORMS AND ENDORSEMENTS	
U-GL-1517-B	COLLECTION OR DISTRIBUTION OF MATERIAL OR INFORMATION IN VIOLATION OF LAW EXCLUSION
CG 04 37	ELECTRONIC DATA LIABILITY *"Loss of Electronic Data Limit: $2,000,000."*
CG 21 06	EXCLUSION – ACCESS OR DISCLOSURE OF CONFIDENTIAL OR PERSONAL
CG 26 39 (TX)	TEXAS CHANGES- EMPLOYMENT RELATED PRACTICES EXCLUSIONS

ZURICH

CG 21 65	TOTAL POLLUTION EXCL WITH BUILDING HEATING EQUIP EXCEPTION AND HOSTILE FIRE EXCEPTION
U-GL-1265-A	EXCLUSION - DESIGNATED WORK (EIFS) – RESIDENTIAL & FRAME BUILDINGS
U-GL-1114-A CW	EXTENDED ONGOING OPERATIONS COVERAGE – REPAIR WORK **Amended wording same as Phase V**
CG 22 79	EXCLUSION - CONTRACTORS-PROFESSIONAL LIABILITY
CG 24 04 (TX)	WAIVER OF TRANSFER OF RIGHTS ***Any Person or Organization that requires You to waive your Rights of Recovery, in a written contract or agreement with the Named Insured that is executed prior to the accident or loss.***
CG 24 17	CONTRACTUAL LIABILITY – RAILROADS ***ALL CONTRACTS FOR WORK DONE FOR RAILROADS***
U-GL-1342-A	LEAD EXCLUSION
U-GL-1054-A CW	UNINTENTIONAL FAILURE TO DISCLOSE
U-GL-922-B	NOTICE OF ERROR IN CLAIM REPORTING
U-GU-1016-A	KNOWLEDGE BY POSITION OR DEPARTMENT ***PROJECT MGR/RISK MGR, OR SAFETY DIRECTOR***
U-GL-1114-A CW	NOTICE OF OCCURRENCE
U-GL-1336-B CW	LARGE DEDUCTIBLE – COMBINED AGGREGATE
U-GU-D-639-A CW	COMBINED AGGREGATE DEDUCTIBLE SCHEDULE
U-GL-1364-A CW	FELLOW EMPLOYEE COVERAGE - DESIGNATED EMPLOYEES/POSITION ***SUPERVISORY PERSONEL OR ONSITE PROJECT MANAGEMENT***
U-GL-1171-A	FUNGI OR BACTERIA EXCLUSION
U-GL-1178-A	ASBESTOS EXCLUSION ENDORSEMENT
U-GL-923-B	SILICA EXCLUSION
U-GL-1180-A	LIMITED CONTRACTUAL LIABILITY
U-GL-1298-C CW	EARLIER NOTICE OF CANCELLATION OR NON-RENEWAL (***90***)
U-GL-1299-A CW	SOLE AGENT FOR INSUREDS
U-GL-1300-A CW	JOINT DEFENSE ENDORSEMENT
U-GL-1301-B CW	DAMAGE TO THE PROJECT EXCL ENDT
U-GL-1520-A CW	PREMIUM AND REPORTS AGREEMENT – COMPOSITE RATED POLICIES
U-GL-1522-A CW	PRIMARY AND NON-CONTRIBUTORY-DESIGNATED PROJECT-CONTROLLED

ZURICH

	INSURANCE PROGRAM
U-GL-1305-A CW	LIMITATION OF COVERAGE TO DESIGNATED PROJECT ENDORSEMENT Refer to Monthly Report in file which includes each project identified in the Marsh Monthly Report for the University of Texas System Rolling Owner Controlled Insurance Program Phase VI with coverage for such project beginning on the notice to proceed date as listed in the Report.
U-GLD-1306-A CW	DESIGNATED PROJECT – DECLARATIONS ENDORSEMENT **All Projects $100,000,000 or greater in Construction Value** Refer to Monthly Report in file which includes each project identified in the Marsh Monthly Report for the University of Texas System Rolling Owner Controlled Insurance Program Phase VI with coverage for such project beginning on the notice to proceed date as listed in the Report.
U-GLD-1306-A CW	DESIGNATED PROJECT – DECLARATIONS ENDORSEMENT **All Projects under $100,000,000 in Construction Value** Refer to Monthly Report in file which includes each project identified in the Marsh Monthly Report for the University of Texas System Rolling Owner Controlled Insurance Program Phase VI with coverage for such project beginning on the notice to proceed date as listed in the Report.
U-GU-618-A CW **DELETED**	SCHEDULE OF LOCATIONS **Not needed since we are referring back to the Monthly Report on forms UGL1305a and UGLD1306B.**
U-GL-1114-A CW	EXTENDED COMPLETED OPERATIONS DESIGNATED PROJECTS **Amended wording same as Phase V**
U-GL-1310-A	DESIGNATED CONSTRUCTION PROJECTS GENERAL AGGREGATE
U-GL-1313-A CW	AMENDMENT OF LIMITS – PRODUCTS – COMPLETED OPS AGG LIMIT Policy Products-Completed Operations Aggregate Limit *$25,000,000* All Projects Combined
U-GL-1114	PROVISIONAL REVIEW ENDORSEMENT – To Follow
U-GL-1114	SUDDEN & ACCIDENTAL POLLUTION – PROPRIETARY ZURICH FORM – To Follow

ZURICH

WORKERS' COMPENSATION COVERAGE

Issuing Company: Zurich American Insurance Company

Policy Numbers:

PART ONE – WORKERS' COMPENSATION (AS PRESCRIBED BY THE STATE COMPENSATION LAWS)	
States: TX	
PART TWO – EMPLOYERS' LIABILITY	**LIMITS**
Bodily Injury by Accident – Each Accident	**$1,000,000**
Bodily Injury by Disease – Policy Limit	**$1,000,000**
Bodily Injury by Disease – Each Employee	**$1,000,000**
PART THREE – OTHER STATES INSURANCE	
All States except those listed in Part One and Monopolistic States (Ohio, North Dakota, Washington, West Virginia and Wyoming).	

WORKERS COMPENSATION PROGRAM TYPE
Large Deductible – Paid Loss

THE DEDUCTIBLE APPLIES TO:	PART ONE: WORKERS' COMPENSATION PART TWO: EMPLOYERS' LIABILITY PART THREE: OTHER STATES INSURANCE		
Coverage Part	**Retention**	**ALAE**	**Aggregate**
A. Workers' Compensation ("WC") coverage arising out of each accident involving one or more employees.		Included	Yes
B. WC coverage arising out of occupational disease payable to each affected employee.		Included	Yes
C. Employer's Liability ("EL") coverage arising out of each accident involving one or more employees.		Included	Yes
D. EL coverage arising out of occupational disease payable to each affected employee.		Included	Yes

ZURICH

COMMENTS

This proposal includes only the coverage terms outlined in the attached Forms Checklist.

ENDORSEMENTS, EXCLUSIONS & CONDITIONS

Note: All state mandatory forms will be added in addition to those listed below, and the most current approved edition date will be used, unless otherwise noted.

WC FORMS AND ENDORSEMENTS	
U-WC-D-314-A	WORKERS COMPENSATION INFORMATION PAGE
WC 00 00 00 C	WORKERS COMPENSATION & EMPLOYERS LIAB INSURANCE POLICY
WC 99 00 01 A	COVER PAGE
U-GU-406-A	INSTALLMENT PREMIUM SCHEDULE
U-WC-321-A	NAMED INSURED SCHEDULE THE BOARD OF REGENTS OF THE UNIVERSITY OF TEXAS SYSTEM THEIR SUBSIDIARIES, ASSOCIATED AND AFFILIATED COMPANIES, SUCCESSORS, OR ASSIGNS, AS NOW EXIST OR MAY HEREAFTER BE ACQUIRED OR FORMED, AND ANY CORPORATION OR OTHER BUSINESS ORGANIZATION WHICH THE PERSON OR ORGANIZATION SHOWN IN THE DECLARATIONS OF THIS POLICY OWNS, OPERATES OR CONTROLS, INCLUDING THE INTEREST AS SUCCESSOR TO ANY CORPORATION OR OTHER BUSINESS ORGANIZATION ACQUIRED, MERGED, OR TRANSFORMED INTO ANY OF THE FOREGOING, AND OTHER INTERESTS AS ARE NOW OR HEREAFTER RELATED TO THE PERSON OR ORGANIZATION SHOWN IN THE DECLARATIONS OF THIS POLICY. ALL CONTRACTORS OF ANY TIER ENROLLED IN THE CONTROLLED INSURANCE PROGRAM AND WHO PERFORM WORK AT A DESIGNATED PROJECT SITE AS DEFINED IN THE DESIGNATED WORKPLACE EXCLUSION ENDORSEMENT (WC 00 03 02). UNLESS OTHERWISE ENDORSED ON THIS POLICY, NO COVERAGE WILL BE PROVIDED TO VENDORS, SUPPLIERS, MATERIAL DEALERS, DEMOLITION, ABATEMENT CONTRACTORS, OR OTHER HAZARDOUS WASTE REMOVAL CONTRACTORS WHO VISIT, MAKE DELIVERIES TO OR WORK TEMPORARILY AT THE PROJECT SITE(S).
WC990002	SCHEDULE OF INSUREDS AND LOCATION Refer to Monthly Report in file which includes each project identified in the Marsh Monthly Report for the University of Texas System Rolling Owner Controlled Insurance Program Phase VI with coverage for such project beginning on the notice to proceed date as listed in the Report.

ZURICH

U-WC-320-A	SCHEDULE OF FORMS AND ENDORSEMENTS
U-WC-315-A	CLASSIFICATION SCHEDULE
WC 00 03 02	DESIGNATED WORKPLACES EXCLUSION ENDORSEMENT The policy does not cover work conducted at or from: Any location except the confines of the project site as described below: All work conducted from the construction operations associated with the project(s) endorsed onto this policy or the following project(s) to be included in the Program: Designated Project(s) Refer to Monthly Report in file which includes each project identified in the Marsh Monthly Report for the University of Texas System Rolling Owner Controlled Insurance Program Phase VI with coverage for such project beginning on the notice to proceed date as listed in the Report. "Designated Project" means: The project shown in this SCHEDULE, including operations on the project site or location that are necessary or incidental to the project as described in the contract documents. "Designated Project" includes the work site(s) associated with such "designated project(s)" and any off-site staging areas, so long as (1) they are dedicated solely to the "designated project(s)", and (2) the sponsor agrees to provide coverage. Also included are those solely dedicated areas immediately adjacent to the "designated projects", including boundaries of local streets or public easement, in which the enrolled subcontractors at any tier perform work under their respective contracts.
U-WC-255 C	LARGE DEDUCTIBLE ENDORSEMENT –
U-GU-D639	COMBINED AGGREGATE DEDUCTIBLE SCHEDULE
WC 00 03 01	ALTERNATE EMPLOYER ENDORSEMENT **Alternate Employer:** THE BOARD OF REGENTS OF THE UNIVERSITY OF TEXAS SYSTEM **Address:** **State of Special or Temporary Employment:** TX
WC 00 04 14	NOTIFICATION OF CHANGE IN OWNERSHIP ENDT
WC 00 04 19	PREMIUM DUE DATE ENDT
WC 42 03 04 A	TEXAS WAIVER OF OUR RIGHT OF RECOVERY FROM OTHERS Schedule 1. ( ) Specific Waiver Name of person or organization

ZURICH

	(X)Blanket Waiver Any person or organization for whom the Named Insured has agreed by written contract to furnish this waiver. 2. Operations: If Any 3. Premium: The premium charge for this endorsement shall be _____ percent of the premium developed on payroll in connection with work performed for the above person(s) or organization(s) arising out of the operations described.
WC 00 04 22 B	TEXAS TERRORISM RISK INSURANCE PROGRAM REAUTHORIZATION ACT
U-WC-332-A	CANCELLATION AND NON-RENEWAL NOTICE ENDORSEMENT – (90) DAYS
U-WC-332-A	KNOWLEDGE OF INJURY ENDORSEMENT
U-WC-332-A	SOLE AGENT
U-WC-332-A	NOTICE OF OCCURRENCE
U-WC-332-A	UNINTENTIONAL ERRORS & OMISSIONS

ZURICH

Wording from Phase VI Board of Regents minutes:

2. Resolution - **U. T. System Board of Regents**: Adoption of resolution to contract with Zurich American Insurance Company and affiliates, Schaumburg, and to guarantee payments under Phase VI of The University of Texas System's Rolling Owner Controlled Insurance Program

The Chancellor concurs in the recommendation of the Executive Vice Chancellor for Academic Affairs, the Executive Vice Chancellor for Business Affairs, and the Executive Vice Chancellor for Health Affairs that the resolution to contract with Zurich American Insurance Company and affiliates, Schaumburg, Illinois, to guarantee payments under Phase VI of The University of Texas System's Rolling Owner Controlled Insurance Program (ROCIP), be adopted as set forth below:

RESOLUTION

WHEREAS, Zurich American Insurance Company and affiliates (Zurich), will insure The University of Texas System (U. T. System) and other persons under Phase VI of a Rolling Owner Controlled Insurance Program (ROCIP) for various construction projects managed by the Office of Facilities Planning and Construction or by a U. T. System institution in certain, pre-approved circumstances;

WHEREAS, Pursuant to this ROCIP, Zurich will issue one or more workers' compensation insurance policies and comprehensive general liability insurance policies that contain deductibles of $ per claim subject to a maximum of $ per occurrence that include allocated costs and indemnity payments; however, such deductibles are subject to a minimum aggregate limit based on $ in construction value at a rate of $ per $ of construction value; and

WHEREAS, The Board of Regents of U. T. System understands and agrees that this large deductible ROCIP requires the prompt reimbursement of sums advanced by Zurich to adjust or pay claims within the deductibles, and the Board desires to guaranty to Zurich the prompt reimbursement of the deductibles for the ROCIP;

NOW THEREFORE, BE IT RESOLVED, That the Board hereby guarantees to Zurich the prompt repayment of the sums advanced by Zurich to adjust or pay claims within the deductibles for the ROCIP, subject to the aggregate deductible limit for the Program. This guaranty shall remain fully binding although Zurich may waive one or more defaults of the insured or fail to exercise any rights against the insured or modify one or more terms of the ROCIP as required by law or with the consent of U. T. System; and, be it further

RESOLVED, That the Board represents and warrants to Zurich that the funds necessary to reimburse Zurich for the aggregate deductible liability of the insured for the ROCIP are included in the appropriations for the various construction projects heretofore approved by the Board.

The resolution, which will be provided in lieu of a letter of credit, trust agreement, or cash, provides Zurich with assurances necessary to complete the ROCIP Phase VI program.

Secretary's note: Regent Hildebrand will abstain from the vote on this item.

ZURICH

SECURITY REQUIREMENTS

Security	Type of Security	Amount	Due by	
Yes	Board Resolution	Same wording as Phase VI	INCEPTION	
Yes	Escrow Fund		INCEPTION	

The Aggregate rate will be addressed within the Board Resolution.

Deductible Agreement wording for Collateral is:

As stated under "Aggregate Deductible" above, You are responsible for All Paid Losses and Paid ALAE under the Deductible Amount(s), subject to a maximum Aggregate Deductible based on a rate of per $1000 Construction Value adjustable at audit. You are also responsible for ULAE and LBA charges in addition to the Aggregate Deductible.

Aggregate Deductible wording in Deductible agreements is:

All Paid Losses and Paid ALAE reimbursed to Us by You as stated under the Deductible Amount(s) above are subject to a minimum Aggregate Deductible based on a rate of per $1000 Construction Value beginning at $3,000,000,000 in Construction Value and adjustable upward at audit. The ULAE and LBA charges reimbursed to Us by You in accordance with the terms of this Agreement are in addition to the Aggregate Deductible.

The Deductible Agreement wording under paragraph 3 of Default "occurs when" will read:

You fail to provide **or rescind** the UT Board Resolution that will guarantee payment under this Agreement for which the University of Texas System may become liable.

FINANCIAL TERMS AND CONDITIONS

ESCROW FUND:
The escrow fund is a non-interest bearing account where Your funds are held by Us to provide for the payment of Your obligations within the Deductible Amount(s) under the Policy(ies) prior to Your reimbursing Us. The Escrow fund will be adjusted once construction values exceed 1 Billion at the discretion of the underwriter.

COLLATERAL REQUIREMENTS:

The Board Resolution (commitment to repay Zurich for Losses as paid). Board Resolution must address the potential increase in deductible and aggregate exposure with increased enrollment by specifying the aggregate rate.

ZURICH

HOW THIS PLAN APPLIES:

The normal reporting of claims (deductible layer or otherwise) is unchanged. Workers Compensation deductible losses are handled and paid by Us similar to full insurance, but with reimbursement by You for paid losses.

On a monthly basis, we will bill You for actual paid loss amounts and allocated loss adjustment expenses within the deductible amount. Reimbursement by You will be due within 30 days of the billing date. This will continue until all losses are paid and closed, often years after that policy's expiration date. In addition, we will bill You for a Loss Adjustment Service charge is an addition to the deductible and stop loss amounts.

As part of this deductible program, there are additional requirements. These include your acceptance of the Deductible Policy Provisions, furnishing a Loss Fund Deposit and Letter of Credit, plus entering into a Deductible Security Agreement. These are described in the attached exhibits.

PREMIUM

COMMERICAL GENERAL LIABILITY AND WORKERS COMPENSATION PAYMENT SCHEDULE

Special Bill	TBD

The first payment is due at inception. Remaining balance is in equal installments due on the of the quarter month. Fixed costs as described are due according to the above payment schedule. Losses, LCF charges, and other loss-based assessments will be billed monthly per the enclosed specifications.

We will adjust premium once enrolled Construction Values exceed $3 Billion.

ZURICH

DUE DATES	WC PREM	WC TRIA	WC E/C	GL PREM	GL TRIA	WC CLAIM FEES	GL CLAIM FEES	ESCROW FUND	TOTAL DUE

All Rates and Premiums are excluding WC TRIA, DTEC or other Assessments. Since the WC will be issued annually, the charges for WC TRIA, DTEC or any Assessments are subject to change depending on State Rates at the time of policy issuance.

COMMISSION SUMMARY

COVERAGE (Commission does not apply to taxes/surcharges/ assessments/TRIA)	COMMISSION %
General Liability	NET
Workers Compensation	NET

ZURICH

THIS NOTICE DOES NOT GRANT ANY COVERAGE OR CHANGE THE TERMS AND CONDITIONS OF ANY COVERAGE UNDER ANY POLICY.

DISCLOSURE OF IMPORTANT INFORMATION RELATING TO TERRORISM RISK INSURANCE ACT

SCHEDULE*

Premium attributable to risk of loss from certified acts of terrorism for lines of insurance subject to TRIA:
WC =
GL = based on the deductible & 3 Billion in CV

*Any information required to complete this Schedule, if not shown above, will be shown in the quote or proposal.

A. Disclosure of Premium
In accordance with the federal Terrorism Risk Insurance Act ("TRIA"), as amended, we are required to provide you with a notice disclosing the portion of your premium, if any, attributable to the risk of loss from terrorist acts certified under that Act for lines subject to TRIA. That portion of premium attributable is shown in the Schedule above. The premium shown in the Schedule above is subject to adjustment upon premium audit, if applicable.

B. Disclosure of Federal Participation in Payment of Terrorism Losses
The United States Government may pay a share of insured losses resulting from an act of terrorism. The federal share equals 85% of that portion of the amount of such insured losses that exceeds the insurer retention. The insurer retention equals 20% of the insurer's prior calendar year direct earned premium associated with lines of insurance subject to TRIA. TRIA is scheduled to expire on December 31, 2014.

C. Disclosure of $100 Billion Cap on All Insurer and Federal Obligations
If aggregate insured losses attributable to terrorist acts certified under TRIA exceed $100 billion in a Program Year (January 1 through December 31) and an insurer has met its deductible under the program, that insurer shall not be liable for the payment of any portion of the amount of such losses that exceeds $100 billion, and in such case insured losses up to that amount are subject to pro rata allocation in accordance with procedures established by the Secretary of Treasury.

D. Availability
As required by TRIA, we have made available to you for lines subject to TRIA coverage for losses resulting from acts of terrorism certified under TRIA with terms, amounts and limitations that do not differ materially from those for losses arising from events other than acts of terrorism.

E. Definition of Act of Terrorism under TRIA
TRIA defines "act of terrorism" as any act that is certified by the Secretary of the Treasury, in concurrence with the Secretary of State and the Attorney General of the United States:

1. to be an act of terrorism;
2. to be a violent act or an act that is dangerous to human life, property or infrastructure;
3. to have resulted in damage within the United States, or outside of the United States in the case of an air carrier (as defined in section 40102 of Title 49, United States Code) or a United States flag vessel (or a vessel based principally in the United States, on which United States income tax is paid and whose insurance coverage is subject to regulation in the United States), or the premises of a United States mission; and
4. to have been committed by an individual or individuals as part of an effort to coerce the civilian population of the United States or to influence the policy or affect the conduct of the United States Government by coercion.

No act may be certified as an "act of terrorism" if the act is committed as part of the course of a war declared by Congress (except for workers' compensation) or if losses resulting from the act, in the aggregate for insurance subject to TRIA, do not exceed $5,000,000

Copyright © 2007 Zurich American Insurance Company -Includes copyrighted material of ISO Properties, Inc. with its permission U-GU-632-C (12/07)

ZURICH

ZURICH NORTH AMERICA
CONSTRUCTION CLAIMS PROPOSAL

Claims Handling Specification Response
Zurich Claims is committed to providing superior and cost effective industry focused claim services tailored to be responsive to University of Texas System ROCIP's specific needs. We emphasize early intervention, quality claims handling, communication, and teamwork with you, our Partner.

Zurich's comprehensive loss reduction program for Workers' Compensation is a set of processes integrating disability management, medical case management, loss cost management and Claim Best Practices, designed to impact the end results.

Dedicated Construction Claims Team
Zurich's Construction Claims Department handles construction related losses. This allows us to capitalize on our construction directed expertise. We have identified a team of designated construction claims professionals to handle your losses. Bios for the lead adjusters are available upon request.

Our WC adjusters maintain a caseload based on complexity and jurisdiction. Tier III adjusters handle more complex claim issues (litigation, denials, complex medical outside major catastrophe claims). Tier II file handlers will respond to lost time claims with less complex issues or more advanced medical only matters. The average caseload for these adjusters is 130-150 cases.

The General Liability adjuster's average caseload is between 120 and 150.

The adjusters have been individually selected for the University of Texas ROCIP program.

Zurich will establish specific customer protocols to best manage the University of Texas ROCIP cases. The adjusters assigned to University of Texas ROCIP have specific expertise with the UT team and aggressively manage cases. They have history of excellent outcomes on prior ROCIP programs.

Here are the teams we have selected for The University of Texas System ROCIP project:

Workers Compensation:
Melinda Chambers- WC Team Manager
Desiree Martyn- WC Lost Time- Tier III- Primary WC Contact
Revisa Denegall- WC Lost Time- Tier II
Kathy Wallace- WC Medical Only
Veronica Hancock – WC MCU

ZURICH

General Liability
Chris McDonald - GL Team Manager
Vickie Jacobson- GL Tier III- Primary GL Contact
Jessica Foster- GL Tier II
Ruby Thomas- GL Tier I
Les Hall – Liability MCU adjuster

Property adjusters may be designated for the account as well, should coverage needs dictate same.

Cheri Perches- Customer Service Executive- will be the single point of contact for any claims/claims related issues on the program. She will work very closely with The University of Texas System ORM members and Marsh to assure compliance to all claim handling protocols and set up the account for any claims services required.

We encourage any opportunity to have the adjusters meet with The University of Texas System ROCIP/ORM and Marsh teams.

Immediate Reporting- Claim Reporting Procedures
Immediate claim reporting is one of the most critical components of a successful post-loss mitigation effort. It allows all other components of our claim handling and managed care services to operate successfully. We encourage you to report all workers' compensation claims on the day they are reported to you. The sooner a report is received by Zurich, the sooner we can implement our mitigation efforts and control the direction of the claim.

Cheri Perches will fine tune the established 'safety net' of authorized reporters of claims. Any claim that circumvents this system as suspect. We will set up those claims a notice only and route them to predetermined personnel for review. Once it can be established that the matter should be handled, just notify Lisa Ramos or your lead adjusters and the claim will be directed to the adjuster for investigation. We can then alert you if any subcontractors on your project are not following the ROCIP protocols for claims reporting. Currently Linda Meik is being notified of all claims that are not reported directly from Marsh or any other authorized reporter.

Periodically we understand that notices of loss come directly to YOU by way of a lawsuit or letter of representation from an attorney. You can forward what information you have to either the lead adjuster for the line of business or to Lisa Ramos to have the matter set up in our system for investigation and handling.

Claim Reporting
To report any claim, just contact the Zurich Care Center, 24 hours a day / 7 days a week in one of the four ways:.

1. **We will set up a dedicated phone number for the University of Texas System OCIP**
2. Fax to 1- 877-962-2567.

3. E-mail: USZ_CareCenter@Zurichna.com. **We can also establish a dedicated email address.**
4. Visit our website (preferred method) at: **www.zurichna.com**
   Click on **'Claims'**
   Under Report A Claim, Click on **'ZNA Online Claims'**

By using the Zurich Care Center to report your claims, we eliminate the necessity for you to fill out the state specific Workers' Compensation First Report of Injury form. Zurich will complete the necessary form and even send a copy in the required format to the state. We will also send a copy of the completed form to you. The reports can be submitted to you either via email or US Mail.

Any missing elements in the data quality of a claim reported to the program will be verified and corrected in partnership with the Marsh team. Cheri Perches will run a report twice monthly to assure all claims are coded correctly. Any missing information will be corrected by the adjusters.

Zurich will continue to supply The University of Texas System ORM and Marsh with access to Risk Intelligence. This is our online claims/financial system. In lieu of monthly status reports we recommend utilizing this system to gather all claims data. We can incorporate into The University of Texas System ROCIP protocols that a monthly synopsis be entered by the adjuster so that the viewer will have the ease of looking at the claim at his/her convenience.

Minimum Services

Telephonic claim reports and 800- Telephone Notification:
This topic was touched upon in the claim reporting section of this submission. The adjusters do not manually enter in claims into the system but they can take down vital information to get a claim started. Once the claim is reported to our call center then the protocols previously established will commence. Zurich's call center is open 24/7/365.

Zurich will assist in establishing protocols for any type of after hours/emergency situation. This is normally done in conjunction with OFPC Safety and Risk Engineering. This will all be done prior to inception of the program. We currently have protocols in place and can fine tune these for Phase VI.

Monthly Claim Review Meetings
On the months that are not designated as official CLAIM REVIEW months, Cheri Perches or a Zurich representative will attend the monthly meeting. CLAIM REVIEW months- the adjusters and Cheri Perches will attend. Cheri Perches will supply The University of Texas System ORM and Marsh Team with updated claim information. At any time a question arises, we can easily have the adjuster on the phone to answer the inquiry.

Medical Facility Identification and Set up
Cheri Perches and Bill Hornback with work with Linda Meik at Marsh to help identify medical facilities that will respond and work with protocols we establish

ZURICH

for the clinics. These protocols will include drug screening, adherence to our RTW philosophy, correct billing to Zurich, immediate lost time notification and ongoing medical treatment needs. We will also identify and post non-routine and weekend treatment facilities. In events of an emergency- it seems most practical to send an injured worker to the nearest hospital. We will also utilize any UT medical facility that is within close proximity to the job site.

These facilities will then be carefully monitored for compliance to our requirements and any issues that arise will be addressed with the Medical Director of that facility. We want to assure that the injured workers get the best possible medical attention but that also the medical facility remains cognizant of our protocols.

The nearest fire and rescue stations will also be contacted.

24-Hour Claim Contact with Contractors
Within 24-hours of receipt of any Work Comp lost-time claim, our file handler will contact The University of Texas System ORM members, the injured worker's employer, and the injured worker to confirm the facts of the injury, obtain necessary information, and provide your employee with an explanation of the benefits. Additionally, the doctor will be contacted to obtain information concerning the diagnosis, treatment, prognosis, causal relationship, and a return-to-work target date.

Once the initial contacts are completed and compensability is established, Zurich will follow back up with interested parties on any issues regarding denial of the claim, positive drug screen findings, potential fraud and reserving/action plan. This can be accomplished by email or phone call. Access to the Risk Intelligence system will also lend the viewer access to the adjuster notes to confirm the adjuster's actions. Our professionals will complete investigations on your claims promptly and thoroughly, starting with the initial contacts. The type of investigation is determined by the loss facts and history provided. And again, all investigation is documented in the claim files and is available online.

Claim Information and Verification
Claim Acknowledgments- Opening and Closing
Upon receipt of a claim, we will send you an acknowledgment of receipt, advising the name of the handling adjuster, phone number, and the claim number assigned to the claim. Upon closure of the claim, a similar acknowledgement will be sent with closing financial data. Currently those notices are being sent to Linda Meik at Marsh

Loss Cost Management
Managed Care
The objective of Managed Care is to ensure your injured worker receives quality medical care at the usual price or at the fee schedule, with a strong emphasis on early and sustained return to work.

Our commitment to your injured employee is to deliver the right care at the right time to maximize medical improvement and minimize the injury's impact on future lifestyle. Our commitment to The University of Texas System ROCIP is to do this at the best possible cost, while meeting your particular service needs.

Managed Care Network
Our online directory provides names, maps and placards via our website available to print or forward. We encourage the use of our network of quality medical providers. These providers agree to certain protocols. There are specific providers with proven effectiveness in treating occupational illnesses and injuries. This panel of selected doctors, with experts across the country, follows treatment plans designed by the best standards in occupational medicine. You have access to this quality network, and our user friendly website will assist you in selecting the best provider to meet your needs.

To access the network follow these simple steps to use the directory:
1. Go to the Zurich website at **www.zurichna.com**
2. Click **'On-line Services'**
3. Click **'Customers'**
4. Scroll down and click the **'Zurich C.a.r.e.® Directory Online '** then to **'Access the C.a.r.e. Directory Now'** link.
5. Follow the steps as indicated to locate a medical provider.

Bill Review
We review and manage each and every medical invoice. Every bill is reviewed to ensure it accurately reflects the services provided and the amount allowed. Through bill review, we catch duplicate billings, billings for services not rendered, billings for inappropriate treatment or redundant testing, overcharging, and an array of other items which should not be billed.

Our bill review system will:
Check bills against state-specific fee schedules and usual and customary rates
Review all patterns of practice for each bill against all treatments for all providers in a claim (not a single bill for a single treatment) to determine whether the procedure is appropriate for the diagnosis
Identify questionable charges, billing practices and treatment options
Use duplicate payment edits to find hidden double payments caused by complex billing practices.
We have networks that offer preferred pricing for pharmacy, durable goods, radiology services and physical therapy. Bill reviewers check the rates to ensure pricing arrangements are being followed

Utilization Management
Controlling medical care costs involves not only managing the fees charged by providers, but also the appropriateness of the treatment. It is estimated that as much as 20-30% of all medical care provided- including tests, surgery and drugs,

is unnecessary. Our nurse case managers review the necessity and appropriateness of treatment against established protocols.

Our Utilization Review (UR) department is tasked with all cost management when it comes to Pre-Admission/Concurrent treatment review and durable medical equipment usage.

Integrated Case Management
Specially trained nurses will work closely with you, your employee, and the treating physician in providing the best medical care with an emphasis on prompt return to work. Case management can begin immediately when you report the loss to us or can a nurse case manager can be assigned to a file at any time at your request or the direction of the handling adjuster.

Catastrophic Case Management/RNs
The Catastrophic Injury Management Program is an important adjunct to the Medical Case Management program. This service is designed to provide immediate medical management and intervention by highly qualified and specially trained nurses on catastrophically injured or ill employees.

Along with our partner, Paradigm Health Corporation, our involvement in these type cases ensures the quality and efficiency of care, promotes recovery while maximizing the health and functional status of the severely injured individual while making use of the most appropriate and cost-effective services.

The Zurich Catastrophic Injury Management team has created a variety of differentiated services and processes including:
URAC certification
Seasoned professionals
One of the largest case management providers
Document online with claims providing instant communications/updates, eliminating paper reports as possible and mailing delays
The ZSC catastrophic coordinator is available 24 hours per day to assist in evaluating the need for assignment to the ZSC CAT program and to initiate immediate referral to the appropriate CAT medical case manager.
ZSC CAT medical case managers have the ability to assist claims handlers in setting appropriate reserves by completing lifetime cost projections.
Several Certified life care planners are available to provide life care planning cervices.

Deb Kollet - Catastrophic Coordinator – 800-427-9831 is available should you have any further inquiries on Zurich's CAT response capabilities.

Other medical loss cost mitigators:
Peer Reviews/Physician Advisors
Our physicians work primarily on-site, in our Schaumburg, Ill., office, although several providers are located out of town and work offsite. All providers are actively practicing and seeing patients on a regular basis. All physicians are board

ZURICH

certified in their respective specialties, and all have been appropriately credentialed in accordance with URAC and other accrediting body regulations.

Physician advisor services include the following:
Brief telephonic review with the nurse case manager and/or adjuster to discuss case handling, clinical issues, appropriateness of care, etc.
Formal file reviews, generating a written report, typically addressing the entire scope of a case
Review of medical necessity of services (excessive PT, chiropractic care, medications, surgery, DME)
Review of causality and relatedness (Did event A really lead to event B?)
Appropriateness of reimbursement (Is payment for X really our responsibility?)
Need, and/or expectations for further care
Lifetime care plan analysis
Review of impairment ratings
Discussion of apportionment
Implications of preexisting conditions
Bill review for both inpatient and outpatient services
Length of stay analysis
Depositions or court appearances

Prescription Management
We have joined forces with a nationwide pharmacy cost containment company-Cypress Care. Through this partnership, we have an alliance with major pharmacy chains and independent pharmacies who can deliver services to the injured employees.

The injured employee receives, in the mail, eligibility material including a pharmacy card. He/she can present the card to fill or refill only an injury related prescription at any participating pharmacy or elect to use the mail-order form to fill the prescription.

Early Return-to-Work
Occupational injuries can be traumatic and recovery difficult. Losing productive employees costs you and the contractor's money and loss of morale. A staff of trained case management nurses will work with you, the physician and the employee to speed recovery and expedite return to work at the right time to prevent re-injury. These trained nurses can be especially helpful in developing modified duty/alternative work programs for your injured employees. Early return to work saves money, boosts employee morale, and prevents costly litigation.

Online Claim Access-Claim Information System for The University of Texas System ORM and Marsh
RiskIntelligence is a powerful web-based system that provides daily updates of claims and loss information in standard or customized reports. By providing timely information in its most useable format, RiskIntelligence enables you to review loss costs, analyze loss trends, and pinpoint problem claims or loss areas early on, so that corrective action can be implemented.

ZURICH

RiskIntelligence also makes it simple for risk managers to share certain information and analysis reports with others in their organization, spreading the power of risk management across the organization and its various functional areas. *(subject to applicable privacy issues)
RiskIntelligence data is readily accessible to you from any internet-connected desktop, with an authorized user ID and password. More than 100 template reports cover virtually any information need, providing everything from detailed claim information to more comprehensive loss analysis to lag-time reporting. RiskIntelligence also offers access to real-time adjuster notes to make it even easier to obtain important loss information. And the potential for additional tailoring of reports – by location, loss size, coverage type, etc. – is virtually limitless.

What hardware and software will I need to use RiskIntelligence?

You need is a 56K modem or better and Internet Explorer 6.0 or better to access RiskIntelligence from your PC. You'll also need Adobe Reader 5.0 or better for viewing PDF type files. One of the advantages of RiskIntelligence is that you can access your reports from any computer whether you're in the office, at home, or traveling.

What if I need a custom report to meet my unique information needs?

We will be more than happy to work with you, identify your specific data needs, and then develop a custom report that meets your specifications

As we see the use of this system as a value added component to the overall management of the risk, there is no cost to you.

Dedicated Recovery Unit
Our industry dedicated recovery professionals' work with the claim handlers to recover your claim dollars from responsible wrongdoers. Our construction claims team is well versed in contractual obligations and will tender claims where appropriate. The expertise of these specialists allows us to ensure that you will pay only your portion, and receive the maximum recovery from a responsible party. However, we are also aware of the business relationships within the Construction industry and will work with you to make sure we do not sever these relationships in our pursuit.

Reserve Requirements
Zurich will build into The University of Texas System ROCIP protocols all required thresholds affecting reserves. We will also discuss any settlements on GL claims with you prior to initiating settlement negotiations with the plaintiffs. On initial reserves or subsequent reserve increases of $10,000 or more, the file handler will provide The University of Texas System ORM designated contact with information regarding the claim's reserves, including a synopsis of our reserve analysis, and will discuss any additional information regarding the claim.

ZURICH

Miscellaneous
Claim Department Organization Structure:
WC:
Greg Larson- AVP
Neil DeBlock- WC Line of Business VP
John Mahoney- Senior VP Technical Claims
Steve Hatch- Chief Claims Officer
Mike Foley- CEO

GL
Steve Thomas- AVP
Jeff Platt- Field Claims VP
John Mahoney- Senior VP Technical Claims
Steve Hatch- Chief Claims Officer
Mike Foley- CEO

Reservation of Rights/Denial of Coverage Letter
As a standard protocol, Zurich will supply Marsh with any ROR or Declination letter prior to submission to the insured. Any issues regarding Zurich's position are discussed thoroughly with Marsh. Currently the letters are being emailed to Linda Meik at Marsh.

Pre-settlement and Structure Settlement Consultation/Notification
In all cases where the settlement range of one of your claims reaches or exceeds 5000, we will notify the designated contact at The University of Texas System ORM with the details of the settlement, in advance. Our goal is to mutually come to an understanding of the settlement exposure and offer. Access to the adjuster's notes, along with an email from the adjuster, will allow Marsh and The University of Texas System the opportunity to see claims that may fall below that threshold.

New Supreme Court case law in Texas precludes a carrier from discussing WC claims that are in active litigation. We will work with Marsh and The University of Texas on claims that fall in this category. There are no settlements in Texas WC.

Payment Queries
The adjusters will assist in every way possible to address any questions from parties on payments of bills, income benefits or any payment on the file. Payments can also be viewed online through the RiskIntelligence system

Recovery consultation
We understand the delicate nature of business relationships and legal contracts that may adversely affect University of Texas System ORM should a recovery matter be pursued. We will discuss ALL subro/recovery efforts with University of Texas System ORM and Marsh prior to initiating such action.

Ongoing communication throughout the claim

Zurich will keep The University of Texas System ORM and Marsh apprised of any material changes in a file. Also, having access to the online system with real time data will provide an up-to-date analysis of the claim.

Although Zurich pays claims that are legitimate, we will investigate and prosecute those individuals that abuse and steal from the system. Our Special Investigation Unit consists of specially trained investigators assigned to suspicious claims. We work with the state fraud bureaus as well as the National Insurance Crime Bureau, and have a huge resource of data sharing.

In many instances, we rely on you, our main resource, to initiate such an investigation.

Litigation Management
Our legal partners are selected based on experience/expertise, specialization and agreed upon Litigation Guidelines. All firms are required to provide a Litigation Budget and an Evaluation Report within 60 days of their assignment.

Each report and budget is reviewed by the suit file handler to confirm the analysis and direct the defense attorney as to how to proceed. Our proactive philosophy allows for early resolution, when appropriate, and reduction of legal expenses. When the case merits an uncompromisable resolution, based on many factors, we may direct the defense through trial. The University of Texas System ORM and Marsh will be copied on any and all legal correspondence where it is legally acceptable to do so.

Zurich does have access to our Staff Legal office in Dallas, Texas. They are assigned general liability cases only at this time. We employ the services of our Austin Board Rep- Flahive, Ogden and Latson or the Law Offices of Paul Kelley to handle all WC matters. Paul Kelley has successfully defended UT in numerous actions and has a long standing relationship with lead WC adjuster Desiree Martyn and the ORM staff.

Zurich will consult with University of The Texas System ORM and Marsh prior to assigning any counsel to any claim- including subrogation.

Managed Care
Due to the volume of our managed care directory, a hard copy cannot be given.

Our online directory provides names, maps and placards via our website available to print or forward. We encourage the use of our network of quality medical providers. These providers agree to certain protocols and fees. There are specific providers with proven effectiveness in treating occupational illnesses and injuries. This panel of selected doctors, with experts across the country, follows treatment plans designed by the best standards in occupational medicine. You have access to this quality network, and our user friendly website will assist you in selecting the best provider to meet your needs.

ZURICH

To access the network follow these simple steps to use the directory:
1. Go to the Zurich website at **www.zurichna.com**
2. Click **'On-line Services'**
3. Click **'Customers'**
4. Scroll down and click the **'Zurich C.a.r.e.® Directory Online '** then to **'Access the C.a.r.e. Directory Now'** link.
5. Follow the steps as indicated to locate a medical provider.

Return to Work Coordination
The ultimate goal of any WC adjuster is to get an injured worker back to the job. Zurich will assist, along with our Risk Engineering and Absence Management Department if necessary, in development of any transitional duty or RTW opportunity. We can also utilize the assistance of ReEmployability to tap into the nonprofit organizations for an alternative job during recovery from an injury.

The adjusters and nurse case managers maintain ongoing communication with all medical personnel treating the injured worker. We make RTW a priority with the doctors. Thus the prequalification of the clinics prior to the program implantation date is critical.

Rehabilitation Management
Although vocational rehab is not mandatory in Texas, we do see the benefit to engaging a rehabilitation vendor on claims where the employee is not able to return to work and their impairment rating is 15% or greater. With Supplemental Income Benefit entitlement increasing the overall exposure, often times initiating vocational rehab helps mitigate SIBs all together. We will discuss the employing of any vocational rehab vendor with The University of Texas System ORM and Marsh prior to commencing the services.

Other
E-mail
All Zurich employees are accessible online. Zurich e-mail is typically: firstname.lastname@zurichna.com. With on-line access, you eliminate the potential of phone tag and ensure the recipient receives the exact message. We are able to communicate with multiple locations at one time and may receive messages even if away from the office.

Site Coding
Zurich can code your claims according to a predetermined structure. Loss runs can then generate a report sorting the claims by the coding structure. However, this is only effective if all losses are coded. When The University of Texas System ROCIP contractor's report new losses, this code will be needed at set up. Otherwise, it will be necessary to notify the Zurich claim handler to add or change the code.

Account Claim Reviews
Quarterly, your Customer Service Executive, Cheri Perches, will set up with The University of Texas System ORM and Marsh, a meeting to discuss specific claims which are of concern to you. During this information exchange, we will be

ZURICH

prepared to discuss what is happening on each of those claims, as well as relay our action plan to bring the file to conclusion. This is also an opportunity to discuss any issues regarding reporting, medical providers, and early-return-to-work programs.

Specification Response Checklist
Claim Handling Specifications

Item	Description	Accepted	Other
1	Dedicated Claim Rep.	xx	
2	Reporting Procedures (Provide copy of claim summary report)	xx	
3	Minimum Services	xx	

ZURICH

Item	Description	Accepted	Other
4	Claim Info. System	xx	
5	Recovery Services	xx	
6	Reserve Requirements	xx	
7	Miscellaneous	xx	
8	Litigation	Where allowed by statute	
9	Managed Care (Provide copy of network directory)	Contained online due to volume	
10	Return to Work	xx	
11	Rehab Management	xx	
12	Status Meetings	xx	
Insurer/TPA Zurich			
By Cheri Perches			
Date 7-10-2017			

ZURICH

CLAIMS/ANNUAL CLAIM FEES (CRADLE TO GRAVE) OPTION

EXHIBIT B					
PRICING FOR CLAIM SERVICES CONTRACT					
BETWEEN					
THE UNIVERSITY OF TEXAS					
AND					
ZURICH SERVICES CORPORATION					
(CRADLE TO GRAVE)					
Term	08/01/2017	-	08/01/2023		
TYPE OF CLAIM			FEE PER CLAIMANT	EST. # OF CLAIMANTS	ANTICIPATED FEES
Workers Comp Medical Only					
Workers Comp Medical Only (Closed no pay)					
Work Comp Indemnity					
Work Comp Indemnity (Closed no Pay)					
General Liability / Premises					
General Liability / Prem Closed no pay					
General Liability / Completed Ops/GL action over					
Let Rest Files ("Record Purposes Only")					
TOTAL ESTIMATED FEES					
ACCT MGMT ADMIN FEE	**waived**				
TOTAL INVOICE					

Note:

1. Fees contemplate State of Texas only.
2. Fees will be collected the same as premium. Claim activity will be reviewed throughout the program.
3. Estimated claim count is based on 3 Billion in CV.

ZURICH

Zurich Services Corporation
Risk Engineering Services
The University of Texas System Phase VII
Rolling Contractor Controlled Insurance Program
8/1/2017 – 8/1/2023

UNBUNDLED SERVICE PROPOSAL
Zurich will provide work site assessments (site visits); develop and present training/educational programs specific to UT System needs and requests; identify, reinforce, promote and monitor incentive programs; assist in developing emergency/crisis management programs; provide accident investigation procedures and service; support and promote contractor Return To Work programs; respond to and investigate catastrophic incidents. The cost of services includes on-site time, preparation of meeting materials, roundtrip travel time and confirmation correspondence.
COST PER HOUR =
Certified Industrial Hygiene services
COST PER DAY =
Additional services include Zurich Seminar Series is available to all ROCIP participants and Cultural Gap Analysis program evaluation per project.
COST = provided by Zurich when effective
COST IS BASED ON "AS NEED" BASIS FOR ADDITIONAL AND UNBUNDLED RISK ENGINEERING SERVICE. CONTRACT FOR UNBUNDLED SERVICE IS REQUIRED BETWEEN ZURICH SERVICES CORPORATION AND THE UNIVERSITY OF TEXAS SYSTEM PHASE VII.
Bilingual (English/Spanish) Risk Engineering Services are available

Vision

- Construction industry advocates and problem-solvers
- Focus on Zero Accident management culture and safety accountability systems, not on regulatory compliance
- Provide results-oriented consultation and oversight; avoid traditional activity-based inspections and other routine services

Construction Safety Management Expertise

- 175 dedicated construction industry specialists throughout United States
- Experienced in all major construction fields, disciplines and trades
- Front-line construction management experience as Project Managers, Superintendents, Safety Directors and Project Safety Specialists

ZURICH

Integrated Service Team

- Assigned contacts for Underwriting, Risk Engineering and Claims
- Joint accountability for customer satisfaction and loss cost management
- Risk Engineer actively facilitates claims management processes to minimize claims costs by assisting with accident investigations and expediting return to work programs

Partners for Safety, Productivity and Profitability

- Deliver "bottom-line" results and/or other measurable impacts
- Identify operational and productivity improvements
- Construction Risk specialty consulting services also available include: feasibility studies, project controls services and scheduling, impact and acceleration studies, contract claims analysis and alternative dispute resolution

Account Management & Service Approach

- Designated Account Coordinator with flexible service plan and service instructions for Risk Engineering and Claims
- Trend and causal analysis of historical claims and incidents
- Conduct comprehensive operational reviews of safety culture, accountability systems and Construction Safety Management Best Practices

Construction Safety Management Expertise

Zurich Services Corporation Risk Engineering Services has extensive construction safety management expertise and consulting experience. Predominately staffed with professionals drawn from the construction industry, Zurich Services Corporation Risk Engineering offers unique customer focused services to Project Owners, Developers and Contractors. These professionals consist of managers, supervisors and safety specialists who have spent most of their career on the front lines implementing, training, and enforcing elements of highly successful construction safety programs. The Zurich Services Corporation Consultants credibly communicate with contractors in ways others cannot because "they have been there".

The Zurich Services Corporation Risk Engineering managers, consultants and project specialists represent all major construction fields/disciplines and contractor trades specialties. In addition to project safety management, additional operational consulting services are available including: feasibility studies, project controls services and scheduling, impact and acceleration studies, contract claims analysis and alternative dispute resolution.

ZURICH

Integrated Service Team Approach

Zurich Services Corporation is an integrated service team comprised of experienced Underwriting, Claims and Risk Engineering professionals. This integrated, team approach yields competitive advantage to the owners and contractors. Zurich Services Corporation Consultants are empowered to provide technical consultation and safety services that provide measurable impact on the success of the profitability and success of projects.

The Zurich Services Corporation Consultants serve a key role in the execution of Zurich's integrated insurance and construction services. The Risk Engineering Consultants are responsible for participating in the oversight of safety program management processes. In addition, the Risk Engineering Consultants have responsibility for overseeing the coordination of the claims administration processes for insured owners and contractors. Zurich Services Corporation recognizes that until zero injury job sites are the norm, effective claims management will remain a key strategy to controlling losses.

The Risk Engineering Consultants will actively facilitate claims management to minimize claims costs. They will work closely with our construction-focused claims adjusters to ensure aggressive communications with the job site/corporate management. The construction Risk Engineering and Claims service teams share a common goal: **to reduce the number and cost of claims.** This is accomplished by ensuring compliance with the project's established claims reporting and coordination procedures. In addition, the Risk Engineering Consultants will assist in conducting accident investigations, expediting return to work programs, monitoring injured workers and attending ongoing claim review meetings. Through this integration of Claims and Risk Engineering, Zurich Services Corporation provides leverage for bottom-line impact.

Partnership for Project Productivity and Profitability

Zurich Services Corporation desires a close working partnership as a vital link in the project safety management team. Zurich Services Corporation understands the need to maintain productive and profitable projects, while incorporating safety as a part of construction business processes. Working jointly with Project Owners and Contractors root causes (not symptoms) of problem areas are identified and practical solutions are facilitated. The role of Zurich's Risk Engineering Consultants is to effectively communicate and actively reinforce the importance of project safety and to ensure that responsibilities and accountabilities exist to identify and eliminate hazardous conditions and unsafe behaviors.

ZURICH

Focus on Culture, Not Compliance

The foundation for a zero injury project is an ingrained culture of managerial accountability, supervisory ownership and employee commitment. Evaluation of conformance to established safety policies/procedures, orientation and training requirements and construction safety best practices help to identify deficiencies in the safety culture. A focus on behavioral safety helps to diagnose whether accountability deficiencies stem from a lack of managerial/supervisory direction or from an apathetic workforce. The Construction Consultant will identify and report deficiencies in the prevailing safety culture and recommend appropriate behavioral approaches.

Risk Engineering Service Philosophy, Roles and Responsibilities

The Risk Engineering Consultants will be responsible for providing comprehensive safety and claims management services to this project. The consultant will act as a key interface between Zurich Services Corporation, Marsh USA, Inc., Inc., The University of Texas System Phase VII, the designated Construction Managers and all authorized contractors and sub-contractors. Risk Engineering Consultants will assist with monitoring and reinforcing effective safety management on project jobsites. The proper role of the Risk Engineering Consultants is to serve as a resource and advisor to management; monitoring the overall loss prevention/loss control program and strategizing risk improvement. In short, the philosophy of Zurich Services Corporation is to avoid activity-based inspections and other routine services and to provide results-oriented consultation. Zurich Services Corporation recognizes that it cannot and should not assume the safety and risk control roles and responsibilities for contractors and owners.

Proposed Risk Engineering Consulting Approach

Zurich Services Corporation recognizes that it cannot and should not assume the safety and risk control roles and responsibilities for contractors and owners. Instead, Zurich Services Corporation proposes to serve as a technical resource and as a strategic partner in the safety and risk management of The University of Texas System Phase VII operations and projects.

ZURICH

Specific Service Guidelines

Safety Inspections/Project Assessments -- The Risk Engineering Consultants will be accessible and available to conduct ongoing safety surveys of the project covering work activities performed. It is agreed that the Risk Engineering Consultants will report the results of field surveys in writing on the date of the safety survey. This report will address safety programming and safety management issues. The report will note repeated deficiencies in safe work practices, policies, or procedures. Likewise, deficiencies to be addressed and suggested remedial actions will be reported.

Safety Program – Zurich Services Corporation agrees to participate in the development, review and ongoing revision of the Project Safety Management Plan. This plan will design the project safety plan and will be used to establish policies/procedures and other required jobsite safety controls. The Risk Engineering Consultants will assist in evaluating the implementation of contractor safety orientation programs as conducted by the general/prime contractors. It is recommended that the Project Safety Management Plan provide a standardized site orientation outline and establish procedures to require orientations of all personnel to be authorized on project jobsites.

Safety Promotion Program – The Risk Engineering Consultants will reinforce the owner's and contractors' work site safety promotional and incentive programs. The Risk Engineering Consultant will help to identify, promote and monitor incentive programs at project jobsites. A properly designed incentive program can be an effective tool, especially in conjunction with an accountability culture. This proposal does not contemplate Zurich Services Corporation funding this incentive program.

Zurich Services Corporation offers OSHA10-hour & OSHA 30-hour training programs on a fee-for-service basis. We will participate in appropriately designed and planned training and educational programs geared to either Field Supervision or Project Management. Programs are intended to reinforce ongoing efforts in either Competent Person or train-the-trainer processes. Training is tailored to specific needs of the owner and is intended to reinforce the management accountability and zero injury safety culture at project job sites.

Meetings – The Risk Engineering Consultants will attend and participate (if possible during requested service visits) in the Construction Managers' and/or general and prime contractors' project planning and progress meetings attended by sub-contractors for hazard/risk identification and pre-planning. Monitor implementation of general/prime contractors' site-specific safety plans and job safety analyses. The objective is to ensure hazards are identified and that pre-planning occurs on a timely basis. This proposal does not contemplate Zurich Services Corporation funding either a New Hire Orientation Video or a Project Employee Safety Handbook.

ZURICH

Medical/Emergency – Zurich Services Corporation believes a crisis management program should be designed to maintain The University of Texas System Phase VI reputation and positive image in the face of adversity. The Risk Engineering Consultants will participate in the design, development and implementation of emergency plans crisis management plans.

Occupational Health – The Risk Engineering Consultants will assist in the identification of occupational health and environmental hazards. Advice will be offered on the development of a hazardous substance control program. The pricing for Risk Engineering services does not contemplate industrial hygiene services, which are provided under a separate contract on a fee-for-service basis. A list of representative services and associated fees will be provided upon request.

Accident Analysis/Statistics – The Risk Engineering Consultants will assist in conducting analyses of project accident data to identify causal factors and trends. Causal and trend analysis can be a useful source for tracking project safety performance.

Urgent Response Team -- This is an important aspect of the Integrated Service Approach for Claims and Risk Engineering services. It is recognized that the Risk Engineering Consultants can play a unique and important role by responding to emergencies and assisting either with root cause investigations or facilitating the flow of information between claims and medical providers. Zurich Services Corporation agrees to develop a list of Risk Engineering consultants who are qualified to respond to and lead an investigation of a catastrophic construction accident.

Upon notification of acceptance, Zurich Services Corporation, The University of Texas System Phase VII and Marsh USA, Inc., Inc. will negotiate a formal service contract for the Risk Engineering services. This will include the terms and conditions of payment.

Thank you for the opportunity to provide our services for this Rolling Owner Controlled Insurance Program. We look forward to working with you in implementing a successful program. If you have questions or desire additional information, please contact:

Bill Hornback, Senior Construction Consultant
Zurich Services Corporation
Phone (972) 377-6910

ZURICH

Optional Engineering Services not included in the cost of your unbundled proposal on fee basis:

Presently, Zurich has over 175 North America Risk Engineering Consultants with competent OSHA and technical backgrounds. They can provide specialized training and support in a variety of areas. This training will be tailored to meet the specific needs of THE UNIVERSITY OF TEXAS SYSTEM PHASE VII. The following is a partial listing of construction-focused training courses offered to participants with different levels of expertise:

* Scaffolding
* Hazard communication
* Confined Space
* Fall Protection
* Lock-out/Tag-out Safety
* Electrical Safety
* Driver Awareness & Defensive Driving
* Respiratory Protection
* Welding/burning/hot work Safety
* Trenching & Excavation Safety
* Crane Safety
* Rigger Safety
* OSHA 10 and 30 hour
* Pre-job training
* Pre-activity training

In addition, nationwide Zurich currently employs 750 Risk Engineers that are specialists in a variety of fields ranging from manufacturing facilities to fleet transportation, providing specialized assessments and training as requested. For example, we currently employ 12 Certified Industrial Hygienists that all have experience with construction exposures. They are a valuable resource for sampling of lead, silica, asbestos, and other materials confronting Contractors. They are experienced in identifying cost-effective controls to protect employees while minimizing productivity loss associated with the corrective action.

Our goal within Zurich Risk Engineering is to provide a level of service that adds value to your efforts to provide safer, productive and profitable construction projects. We would be pleased to meet and discuss in more detail how we might be of service.

We offer a wide range of services specific to the construction industry that we will tailor to meet your individual needs. Please review the attached pages to give you a better idea of how these services might benefit your organization.

ZURICH

Zurich's Expectations of the Wrap-Up Administrator for Wrap-Ups Based on Contract Value

Audit of Contract Value - Where Contract Value is the Exposure Base
Zurich will audit contract value at the end of the program term or a schedule to be agreed upon by all parties.

Zurich may at any time request documentation on all projects in the event any of the following shall occur.

*A new system is used for processing the contract value data
*The information used to generate the data is changed at any time
*The documentation which is audited for the selected projects is identified as incomplete or inaccurate.

Once it is confirmed that the audits completed on the randomly selected projects are an accurate reflection of the intended final audited contract value, Zurich will agree to the following selection criteria.

*If the total number of projects enrolled in less than 30, Zurich reserves the right to request documents on 100% of the enrolled projects
*If the total number of projects enrolled is between 30-75, Zurich reserves the right to request full documents on 30% of those enrolled projects and 100% if at any time the information needs further review based on the criteria above.
*If the total number of projects enrolled is over 75, Zurich reserves the right to request full documents on 20% of those enrolled projects and 100% of the projects if at any time the information needs further review based on the criteria above.

Definition of Contract Value
If Contract Value is not defined on the non-policy agreement, we will use the following definition:

Construction Value means the direct contractor costs for labor, material, equipment, services, overhead, profit and contingencies and any other direct construction costs, including but not limited to the gross amount paid in connection with construction operations or the construction project(s) to all contractors and subcontractors of all tiers for labor or payroll, material, equipment, services, overhead and profit or any other direct construction cost. Construction Cost does not include compensation paid to an architect, engineer or other consultants; or the cost of land or rights-of-way; taxes or insurance costs and fees; permit costs; or other costs identified in the construction project contract documents as the responsibility of the construction project's owner.

The Wrap-Up Administrator Should Provide the Following Information for the Audit of Contract Value:

- Actual Contract Value at the start of each project as shown on the contract between the general contractor or project manager and the project owner.
- Detailed record of all change orders that occurred during the life of the project.
  - Includes changes orders that increase or decrease the amount of the Contract Value.
  - Zurich may ask for additional detail on any change orders as part of the audit process.
- The resulting final Contract Value for each project after all change orders are accounted for.

Time Schedule for Providing Contract Value Information to Zurich:

- Provide Contract Value and a detailed record of change orders to Zurich premium audit within 90 days of program term expiration or project close out date, as applicable.

ZURICH

Collection and Reporting of Payroll - for Reporting of Comp Unit Stat on Work Comp Wrap-Ups

- Broker collects Payroll on all enrolled subcontractors for reporting of comp unit stat.
- Broker provides Zurich Premium Audit with reported payrolls by class code, by state and by project for each enrolled sub within 60 days after each anniversary expiration date.
- Audit reviews class codes and reports comp unit stat.

Enrollment Process Controls

The Wrap-Up Administrator should:

- In conjunction with the Sponsor, assume the responsibility of ensuring that all eligible subcontractors performing work on the covered job site are enrolled in the wrap-up.
- Follow up with all subcontractors to verify that complete enrollment forms have been received and forwarded to Zurich Construction to complete the enrollment process.

CHUBB®

NOTICE TO POLICYHOLDERS
TEXAS

POLICY EXCLUSIONS

The Texas Department of Insurance requires that policies containing certain exclusions be specifically pointed out to our policyholders. In compliance with this provision, this notice is to advise you that one or more of the following exclusions may be attached to your policy by way of a specific policy endorsement. These are not all of the exclusions contained in your policy, and you are advised to read your policy and all of the attached endorsements carefully, and discuss any questions with your agent or a company representative. (Check all that apply).

- [X] Asbestos Exclusion
- [ ] Employment Related Practices Exclusion
- [ ] Extremely Low Frequency / Electromagnetic Field (ELF/EMF) Exclusion
- [ ] Land Subsidence and Land Condemnation Exclusion
- [ ] Lead Exclusion
- [ ] Mold, Fungi or Bacteria Exclusion
- [ ] Pollution Exclusion
- [ ] Silica or Silica Dust Exclusion
- [ ] Tobacco Exclusion
- [ ] -

CHUBB®

Declarations
Following Form Excess Liability Policy

Policy Number: XSM G46798673 001
Issuing Company: Indemnity Insurance Company of North America
436 Walnut Street
Philadelphia, Pennsylvania 19106

Item 1. a) Named Insured: The Board of Regents of the University of Texas System

and as more fully set forth in the Lead Underlying Policy

b) Address of Named Insured: 220 West 7th Street
Austin, Texas 78701-2241

Item 2. a) Lead Underlying Policy No: 47-XSF-304056-01

b) All other Underlying Policy No(s)
Excess of the Lead Umbrella (If Any): N/A

See schedule to be completed and attached by The Company

c) Lead Underlying Insurer: Berkshire Hathaway Specialty Insurance

d) All other Underlying Insurer(s):
Excess of the Lead Umbrella (If Any): N/A

See schedule to be completed and attached by The Company

Item 3. Limit of Liability: (Insuring Agreement 2.)	a)	USD $ 25,000,000	Each Occurrence
	b)	USD $ 25,000,000	Aggregate
Item 4. Underlying Limits: (Insuring Agreement 2.)	a)	USD $ 25,000,000	Each Occurrence
	b)	USD $ 25,000,000	Aggregate

which in turn is excess of any applicable limits and/or retentions as more fully set forth in the Lead Underlying Policy

Item 5. Policy Period: From: 08/01/2017 to 08/01/2023 both days at 12:01 a.m. Standard Time at the address of the Named Insured.

Item 6: Notice to: (Conditions 3. and 5.)

a) Notice of Occurrence: See Chubb Claims Policy Holder Notice

b) All other Notices:

©Chubb. 2016. All rights reserved.
Includes copyright material of Marsh USA Inc., with its permission.

To the Named Insured: See Item 1a

To the Company: Indemnity Insurance Company of North America

Item 7. Premium:

USD $ _____ (Not Subject to Audit)
USD $ _____ (Terrorism Premium included in Premium)
USD $ _____ State Surcharge

Item 8. Policy Form: XSM-43896 (01/15)
Endorsements:

Endorsement Number	Form Number - Edition Date	Title
	ALL-38009 (02/13)	Notice to Policyholders Texas
	XSM-43898 (01/15)	Schedule of Underlying Insurance
	XSM-43896 (01/15)	Following Form Excess Liability Coverage
	ALL-20887a (03/16)	Chubb Producer Compensation Practices & Policies
	XS-28500a (08/13)	CHUBB Specialty Claims Loss Notification Form
	IL P 001 (01/04)	U.S. Treasury Department's Office Of Foreign Assets Control ("OFAC") Advisory Notice To Policyholders
001	CC-1K11h (03/14)	Signatures
002	XSM-43899 (01/15)	Asbestos Exclusion
003	XSC-27522a (01/15)	Cap On Losses from Certified Acts Of Terrorism
004	TRIA 11d (03/16)	Disclosure Pursuant To Terrorism Risk Insurance Act
005	All-21101 (11/06)	Trade or Economic Sanctions Endorsement
006	MS-208330 (08/17)	Other Insurance Endorsement

©Chubb. 2016. All rights reserved.
Includes copyright material of Marsh USA Inc., with its permission.

CHUBB®

Schedule of Underlying Insurance

Lead Underlying Policy Limits	a) USD	$25,000,000	Each Occurrence
Carrier: Berkshire Hathaway Specialty Insurance			
Policy# 47-XSF-304056-01	b) USD	$25,000,000	Aggregate
Policy Period: 08/01/2017 to 08/01/2023	c) USD	$25,000,000	Products/Completed Ops Aggregate

which in turn is excess of any applicable limits and/or retentions as more fully set forth in the Lead Underlying Policy.

©Chubb. 2016. All rights reserved.
Includes copyright material of Marsh USA Inc., with its permission.

CHUBB®

FOLLOWING FORM
EXCESS LIABILITY COVERAGE

I. INSURING AGREEMENTS

1. COVERAGE

The Company hereby agrees, subject to the terms, definitions, exclusions and conditions contained in this Policy, to pay those sums which the Insured shall be legally obligated to pay as damages by reason of the liability covered by and as more fully defined in the Lead Underlying Policy (as stated in Item 2. a) of the Declarations and hereinafter referred to as "Lead Underlying Policy"); provided always however, that this Policy shall not apply until the Insured and/or the Underlying Insurers (as stated in Items 2. c) and 2. d) of the Declarations and hereinafter referred to as "Underlying Insurers") have paid or have been held liable to pay the full amount of the Underlying Limits for damages covered by the Lead Underlying Policy in accordance with Insuring Agreement 2.

The Company agrees that, except as may otherwise be endorsed to this Policy, this Policy will follow:

1. the same terms, definitions, exclusions and conditions as are, at inception hereof, contained in the Lead Underlying Policy, and;

2. all subsequent changes made to the terms, definitions, exclusions and conditions of the Lead Underlying Policy that do not broaden the scope of the coverage already provided.

Notwithstanding the foregoing, the following changes to the Lead Underlying Policy made after inception hereof shall not be binding upon the Company unless otherwise agreed in writing by the Company:

(a) any change which is subject to an additional premium charge,

(b) the inclusion of an additional coverage extension endorsement,

(c) any change to the terms, definitions, exclusions and conditions that broadens the scope of the coverage already provided.

It is, however, specifically agreed that if any of the Underlying Policy/ies stated in Item 2. b) of the Declarations exclude or limit any part of the coverage provided by the Lead Underlying Policy stated in Item 2. a) of the Declarations, then this Policy shall not drop down to apply in the place of such excluded or limited coverage and the Insured shall be considered as a self insurer to the extent that there is no other available insurance to cover the deficit.

2. LIMITS OF LIABILITY

The Company shall be liable only to pay sums up to:

USD _____ (as stated in Item 3. a) of the Declarations)	in respect of each Occurrence - subject to a limit of
USD _____ (as stated in Item 3. b) of the Declarations)	in the aggregate as applicable per the Lead Underlying Policy, and then such aggregate(s) to apply hereon in an identical manner to the Lead Underlying Policy

©Chubb. 2016. All rights reserved.
Includes copyright material of Marsh USA Inc., with its permission.

in excess of Underlying Limits as follows:

USD ___ ___ (as stated in Item 4. a) of the Declarations)	in respect of each Occurrence, but
USD ___ ___ (as stated in Item 4. b) of the Declarations)	in the aggregate as applicable per the Lead Underlying Policy

which in turn is excess of any applicable limits and/or retentions as more fully set forth in the Lead Underlying Policy.

In the event of reduction or exhaustion of the applicable aggregate Underlying Limits by reason of sums paid thereunder as damages, whether by an Underlying Insurer or the Insured, then this Policy, subject to its terms, definitions, exclusions and conditions shall:

(1) in the event of reduction, pay in excess of such reduced Underlying Limits;

(2) in the event of exhaustion, continue in force as Lead Underlying Insurance.

Defense costs and expenses shall operate in an identical manner to the Lead Underlying Policy as respects whether defense costs and expenses are included within the limits of liability or are in addition to the limits of liability.

II. CONDITIONS

1. MAINTENANCE OF UNDERLYING INSURANCE

It is a condition of this Policy that the Underlying Policy/ies (as stated in Items 2. a) and 2. b) of the Declarations and hereinafter referred to as "Underlying Policy/ies") shall be maintained in full force and effect, except for any reduction of the aggregate limits contained therein solely by payment of any sums covered by the Lead Underlying Policy. In the event of the Insured's failure to maintain the Underlying Policy/ies in full force and effect and except with respect to the aforementioned aggregate reduction, coverage hereunder shall not be invalid, but shall apply to the same extent that it would have applied had there been compliance with this condition.

2. ASSISTANCE & CO-OPERATION AND DUTY TO DEFEND

A. The Company shall not be called upon to assume charge of the settlement or defense of any claim made or suit brought or proceeding instituted against the Insured. However the Company shall have the right and shall be given the opportunity to associate with the Insured in the defense of any claim, suit or proceeding relative to an Occurrence where the claim, suit or proceeding involves, or appears reasonably likely to involve the Company, in which event the Insured and the Company shall co-operate in all things in the defense, investigation and settlement of such claim, suit or proceeding.

B. Notwithstanding the foregoing, the Company will have the right and duty to defend any claim made, suit brought or proceeding instituted against the Insured to which this Policy applies, if;

i. The Lead Underlying Insurer as stated in Item 2. c) of the Declarations has the right and duty to defend any claim, suit or proceeding in accordance with the terms of the Lead Underlying Policy as stated in Item 2. a) of the Declarations, and;

ii. The applicable Underlying Limits as stated in Item 4. of the Declarations have been exhausted in accordance with Insuring Agreement 1. COVERAGE

The Company shall not be obligated to defend any claim, suit or proceeding after the applicable Limits of Liability of this Policy have been exhausted.

©Chubb. 2016. All rights reserved.
Includes copyright material of Marsh USA Inc., with its permission.

3. **CANCELLATION**

The Named Insured or the Company hereon shall have the right to cancel this Policy in accordance with the cancellation provisions of the Lead Underlying Policy. Such notice shall be sent to the entity stated in Item 6. b) of the Declarations.

4. **OTHER INSURANCE**

If other valid and collectible insurance is available to the Insured covering a loss also covered by this Policy, other than a Policy that is specifically written to apply in excess of this Policy, the insurance afforded by this Policy shall apply in excess of and shall not contribute with such other insurance.

5. **NOTICE OF OCCURRENCE**

Whenever the Insured has information from which it may reasonably conclude that an Occurrence covered hereunder involves injuries or damages which are likely to involve this Policy, notice shall be sent to the entity stated in Item 6. a) of the Declarations as soon as practicable.

©Chubb. 2016. All rights reserved.
Includes copyright material of Marsh USA Inc., with its permission.

CHUBB®

Chubb Producer Compensation Practices & Policies

Chubb believes that policyholders should have access to information about Chubb's practices and policies related to the payment of compensation to brokers and independent agents. You can obtain that information by accessing our website at http://www.chubbproducercompensation.com or by calling the following toll-free telephone number: 1-866-512-2862.

CHUBB

CHUBB SPECIALTY CLAIMS LOSS NOTIFICATION FORM

FORWARD BY FAX, MAIL OR E-MAILTO:

Chubb Excess
P.O. Box 5103
Scranton, PA 18505-0510
Fax No.: (866)635-5687

ChubbClaimsFirstNotice@Chubb.com

Today's Date:

Notice of: (check all that apply)

- ☐ **First-Party Claim**
- ☐ **Potential Claim**
- ☐ **Third-Party Claim**
- ☐ **Litigation Initiated**
- ☐ **Other** _____

Insured's Name & Contact Information

Company Name: The Board of Regents of the University of Texas System

Point of Contact: _____

Address: 220 West 7th Street
Austin, Texas 78701-2241

Phone Number: _____

Broker/Agent's Name & Contact Information

Company Name: MARSH USA INC.

Point of Contact: _____

Address: 1166 AVENUE OF THE AMERICAS, 24TH FLOOR
NEW YORK, New York 10036

Phone Number: _____

Policy Information

Policy Number: XSM G46798673 001

Policy Period: 08/01/2017 - 08/01/2023

Limits of Liability: $ _____ **per** $ _____ **agg** **Self-Insured Retention/Deductible:** _____

Loss Information

Date of Incident/Claim: _____ **Location:** _____

Claimant Name/Address: _____

Description of Loss: _____

Please list all attached or enclosed documentation: ☐ (check if none provided)

Name of Person Completing This Form: _____ Signature: _____

©Chubb. 2016. All rights reserved.

IL P 001 01 04

U.S. TREASURY DEPARTMENT'S OFFICE OF FOREIGN ASSETS CONTROL ("OFAC") ADVISORY NOTICE TO POLICYHOLDERS

No coverage is provided by this Policyholder Notice nor can it be construed to replace any provisions of your policy. You should read your policy and review your Declarations page for complete information on the coverages you are provided.

This Notice provides information concerning possible impact on your insurance coverage due to directives issued by OFAC. **Please read this Notice carefully.**
The Office of Foreign Assets Control (OFAC) administers and enforces sanctions policy, based on Presidential declarations of "national emergency". OFAC has identified and listed numerous:

- Foreign agents;
- Front organizations;
- Terrorists;
- Terrorist organizations; and
- Narcotics traffickers;

as "Specially Designated Nationals and Blocked Persons". This list can be located on the United States Treasury's web site – http//www.treas.gov/ofac.

In accordance with OFAC regulations, if it is determined that you or any other insured, or any person or entity claiming the benefits of this insurance has violated U.S. sanctions law or is a Specially Designated National and Blocked Person, as identified by OFAC, this insurance will be considered a blocked or frozen contract and all provisions of this insurance are immediately subject to OFAC. When an insurance policy is considered to be such a blocked or frozen contract, no payments nor premium refunds may be made without authorization from OFAC. Other limitations on the premiums and payments also apply.

© ISO Properties, Inc., 2004

SIGNATURES

Named Insured			Endorsement Number
The Board of Regents of the University of Texas System			001
Policy Symbol	Policy Number	Policy Period	Effective Date of Endorsement
XSM	G46798673 001	08/01/2017 to 08/01/2023	08/01/2017
Issued By (Name of Insurance Company)			
Indemnity Insurance Company of North America			

THE ONLY SIGNATURES APPLICABLE TO THIS POLICY ARE THOSE REPRESENTING THE COMPANY NAMED ON THE FIRST PAGE OF THE DECLARATIONS.

By signing and delivering the policy to you, we state that it is a valid contract.

INDEMNITY INSURANCE COMPANY OF NORTH AMERICA (A stock company)
BANKERS STANDARD FIRE AND MARINE COMPANY (A stock company)
BANKERS STANDARD INSURANCE COMPANY (A stock company)
ACE AMERICAN INSURANCE COMPANY (A stock company)
ACE PROPERTY AND CASUALTY INSURANCE COMPANY (A stock company)
INSURANCE COMPANY OF NORTH AMERICA (A stock company)
PACIFIC EMPLOYERS INSURANCE COMPANY (A stock company)
ACE FIRE UNDERWRITERS INSURANCE COMPANY (A stock company)
WESTCHESTER FIRE INSURANCE COMPANY (A stock company)

436 Walnut Street, P.O. Box 1000, Philadelphia, Pennsylvania 19106-3703

Rebecca L. Collins
REBECCA L. COLLINS, Secretary

JOHN J. LUPICA, President

Authorized Representative

Chubb. Insured.℠

ASBESTOS EXCLUSION

Named Insured			Endorsement Number
The Board of Regents of the University of Texas System			002
Policy Symbol	Policy Number	Policy Period	Effective Date of Endorsement
XSM	G46798673 001	08/01/2017 to 08/01/2023	08/01/2017
Issued By (Name of Insurance Company)			
Indemnity Insurance Company of North America			

THIS ENDORSEMENT CHANGES THE POLICY. PLEASE READ IT CAREFULLY.

This endorsement modifies insurance provided under the following:

FOLLOWING FORM EXCESS LIABILITY POLICY

The coverage provided by this policy is amended to add the following exclusion:

Asbestos.

This insurance does not apply to any loss, demand, claim or suit arising out of or related to asbestos or asbestos-containing materials.

All other terms and conditions of this policy remain unchanged.

_____
Authorized Representative

©Chubb. 2016. All rights reserved.
Includes copyright material of Marsh USA Inc., with its permission.

CAP ON LOSSES FROM CERTIFIED ACTS OF TERRORISM

Named Insured			Endorsement Number
The Board of Regents of the University of Texas System			003
Policy Symbol	Policy Number	Policy Period	Effective Date of Endorsement
XSM	G46798673 001	08/01/2017 to 08/01/2023	08/01/2017
Issued By (Name of Insurance Company)			
Indemnity Insurance Company of North America			

THIS ENDORSEMENT CHANGES THE POLICY. PLEASE READ IT CAREFULLY.

This endorsement modifies insurance provided under the following:

ACE CATASTROPHE LIABILITY PLUS POLICY
FOLLOWING FORM EXCESS LIABILITY POLICY

A. If aggregate insured losses attributable to terrorist acts certified under the federal Terrorism Risk Insurance Act exceed $100 billion in a calendar year and we have met our insurer deductible under the Terrorism Risk Insurance Act, we shall not be liable for the payment of any portion of the amount of such losses that exceeds $100 billion, and in such case insured losses up to that amount are subject to pro rata allocation in accordance with procedures established by the Secretary of the Treasury.

B. "Certified act of terrorism" means an act that is certified by the Secretary of the Treasury, in accordance with the provisions of the federal Terrorism Risk Insurance Act, to be an act of terrorism pursuant to such Act. The criteria contained in the Terrorism Risk Insurance Act for a "certified act of terrorism" include the following:

   a. The act resulted in insured losses in excess of $5,000,000 in the aggregate, attributable to all types of insurance subject to the Terrorism Risk Insurance Act; and

   b. The act is a violent act or an act that is dangerous to human life, property or infrastructure and is committed by an individual or individuals as part of an effort to coerce the civilian population of the United States or to influence the policy or affect the conduct of the United States Government by coercion.

   The terms and limitations of any terrorism exclusion, or the inapplicability or omission of a terrorism exclusion, do not serve to create coverage for injury or damage that is otherwise excluded under this policy.

C. In the event that any "certified act of terrorism" is not covered by "underlying insurance" or "other insurance" due to any exclusion or exclusions contained therein, we will pay "loss" in excess of the "underlying insurance" Each Occurrence Limit stated in the Declarations.

All other terms and conditions of the policy remain unchanged.

_____
Authorized Representative

DISCLOSURE PURSUANT TO TERRORISM RISK INSURANCE ACT

Named Insured The Board of Regents of the University of Texas System			Endorsement Number 004
Policy Symbol XSM	Policy Number G46798673 001	Policy Period 08/01/2017 to 08/01/2023	Effective Date of Endorsement 08/01/2017
Issued By (Name of Insurance Company) Indemnity Insurance Company of North America			

THIS ENDORSEMENT CHANGES THE POLICY. PLEASE READ IT CAREFULLY.

Disclosure Of Premium

In accordance with the federal Terrorism Risk Insurance Act, we are required to provide you with a notice disclosing the portion of your premium, if any, attributable to coverage for terrorist acts certified under the Terrorism Risk Insurance Act. The portion of your premium attributable to such coverage is shown in this endorsement or in the policy Declarations.

Disclosure Of Federal Participation In Payment Of Terrorism Losses

The United States Government, Department of the Treasurv, will pay a share of terrorism losses insured under the federal program. The federal share equals for year 2015, beginning on January 2016; beginning on January 1 2017, beginning on January 1, 2018; beginning on January 1, 2019 and beginning on January 1, 2020 of that portion of the amount of such insured losses that exceeds the applicable insurer retention. However, if aggregate insured losses attributable to terrorist acts certified under the Terrorism Risk Insurance Act exceed in a calendar year, the Treasury shall not make any payment for any portion of the amount of such losses that exceeds

Cap On Insurer Participation In Payment Of Terrorism Losses

If aggregate insured losses attributable to terrorist acts certified under the Terrorism Risk Insurance Act exceed $100 billion in a calendar year and we have met our insurer deductible under the Terrorism Risk Insurance Act, we shall not be liable for the payment of any portion of the amount of such losses that exceeds $100 billion, and in such case insured losses up to that amount are subject to pro rata allocation in accordance with procedures established by the Secretary of the Treasury.

COVERAGE OF "ACTS OF TERRORISM" AS DEFINED BY THE REAUTHORIZATION ACT WILL BE PROVIDED FOR THE PERIOD FROM THE EFFECTIVE DATE OF YOUR NEW OR RENEWAL POLICY THROUGH THE EARLIER OF THE POLICY EXPIRATION DATE OR DECEMBER 31, 2020. EFFECTIVE DECEMBER 31, 2020 THE TERRORISM RISK INSURANCE PROGRAM REAUTHORIZATION ACT EXPIRES.

Terrorism Risk Insurance Act premium: _____.

_____
Authorized Representative

TRADE OR ECONOMIC SANCTIONS ENDORSEMENT

Named Insured			Endorsement Number
The Board of Regents of the University of Texas System			005
Policy Symbol	Policy Number	Policy Period	Effective Date of Endorsement
XSM	G46798673 001	08/01/2017 to 08/01/2023	08/01/2017
Issued By (Name of Insurance Company)			
Indemnity Insurance Company of North America			

THIS ENDORSEMENT CHANGES THE POLICY. PLEASE READ IT CAREFULLY.

This insurance does not apply to the extent that trade or economic sanctions or other laws or regulations prohibit us from providing insurance, including, but not limited to, the payment of claims. All other terms and conditions of policy remain unchanged.

Authorized Agent

OTHER INSURANCE ENDORSEMENT

Named Insured			Endorsement Number
The Board of Regents of the University of Texas System			006
Policy Symbol	Policy Number	Policy Period	Effective Date of Endorsement
XSM	G46798673 001	08/01/2017 to 08/01/2023	08/01/2017
Issued By (Name of Insurance Company)			
Indemnity Insurance Company of North America			

THIS ENDORSEMENT CHANGES THE POLICY. PLEASE READ IT CAREFULLY.

This endorsement modifies insurance provided under the following:

FOLLOWING FORM EXCESS LIABILITY POLICY

The policy is amended at **SECTION II, CONDITIONS** by deleting Condition 4, **OTHER INSURANCE** in its entirety.

All other terms and conditions of this Policy remain unchanged.

JOHN J. LUPICA, President
Authorized Representative

©Chubb. 2016. All rights reserved.

Starr Indemnity & Liability Company

399 Park Avenue, 9th Fl.
New York. NY 10022

Policy No.: 1000023859
Renewal of: NEW

Following Form Excess Liability Policy

DECLARATIONS

Item 1.	a) Named Insured:	**University of Texas ROCIP VII and as more fully set forth in the Lead Underlying Policy**
	b) Address of Named Insured:	**504 LaVaca Street, Suite 930 Austin, TX 78701**
Item 2.	a) Lead Underlying Policy No:	**47-XSF-304056-01**
	b) All other Underlying Policy No(s):	**GLO0183287; WC0183286; G46798673 001**
	c) Lead Underlying Insurer:	**Berkshire Hathaway Insurance Company**
	d) All other Underlying Insurer(s):	**Zurich America & Indemnity Insurance Company of North America**
Item 3.	Limits of Liability: (Insuring Agreement 2.)	a) **$ 25,000,000** Per Occurrence b) **$ 25,000,000** Aggregate Where Applicable
Item 4.	Underlying Limits: (Insuring Agreement 2.)	a) **$ 50,000,000** Per Occurrence b) **$ 50,000,000** Aggregate Where Applicable which in turn is excess of any applicable limits and/or retentions as more fully set forth in the Lead Underlying Policy
Item 5.	Policy Period:	From: **August 1, 2017** to **August 1, 2023** both days at 12:01 a.m. Standard Time at the address of the Named Insured.
Item 6.	Notice to: (Conditions 3. and 5.)	a) Notice of Occurrence: York Risk Services Group, Inc. Attn OSC P.O. Box 183188 Columbus, OH 43218-3188 Claims E-mail: 4869excessclaims@yorkrsg.com Claims Fax: (866) 695-3651 b) All other Notices: To Insured: To the Company: 399 Park Avenue, 8th Floor New York, NY 10022
Item 7.	Premium: Minimum Premium: Minimum Premium Earned	

HERETO: 100% part of 100% of the Limit of Liability and Premium stated above.
Marsh XSellence Form 10/2014 (Occ)
© 2014 by BowringMarsh, Marsh Ltd. and Marsh USA,Inc. All rights reserved.

Starr Indemnity & Liability Company

Item 8.
Endorsements:

Marsh XSellence Form 10/2014
Excess Liability Policy Schedule of Underlying Insurance
Certified Acts of Terrorism XS Retained with Cap
Disclosure Pursuant to Terrorism Act
Texas Pollution Amendatory
Texas Changes- Cancellation and Nonrenewal
Texas Changes- Pollution Exclusion
Texas Changes
Limitation of Coverage to Designated Premises of Projects

HERETO: 100% part of 100% of the Limit of Liability and Premium stated above.
Marsh XSellence Form 10/2014 (Occ)
© 2014 by BowringMarsh, Marsh Ltd. and Marsh USA,Inc. All rights reserved.

Starr Indemnity & Liability Company

INSURING AGREEMENTS

1. COVERAGE -

The Company hereby agrees, subject to the terms, definitions, exclusions and conditions contained in this Policy, to pay those sums which the Insured shall be legally obligated to pay as damages by reason of the liability covered by and as more fully defined in the Lead Underlying Policy (as stated in Item 2. a) of the Declarations and hereinafter referred to as "Lead Underlying Policy"); provided always however, that this Policy shall not apply until the Insured and/or the Underlying Insurers (as stated in Items 2. c) and 2. d) of the Declarations and hereinafter referred to as "Underlying Insurers") have paid or have been held liable to pay the full amount of the Underlying Limits for damages covered by the Lead Underlying Policy in accordance with Insuring Agreement 2.

The Company agrees that, except as may otherwise be endorsed to this Policy, this Policy will follow:

1. the same terms, definitions, exclusions and conditions as are, at inception hereof, contained in the Lead Underlying Policy, and;

2. all subsequent changes made to the terms, definitions, exclusions and conditions of the Lead Underlying Policy that do not broaden the scope of the coverage already provided.

Notwithstanding the foregoing, the following changes to the Lead Underlying Policy made after inception hereof shall not be binding upon the Company unless otherwise agreed in writing by the Company:

(a) any change which is subject to an additional premium charge,

(b) the inclusion of an additional coverage extension endorsement,

(c) any change to the terms, definitions, exclusions and conditions that broadens the scope of the coverage already provided.

It is, however, specifically agreed that if any of the Underlying Policy/ies stated in Item 2. b) of the Declarations exclude or limit any part of the coverage provided by the Lead Underlying Policy stated in Item 2. a) of the Declarations, then this Policy shall not drop down to apply in the place of such excluded or limited coverage and the Insured shall be considered as a self insurer to the extent that there is no other available insurance to cover the deficit.

2. LIMITS OF LIABILITY -

The Company shall be liable only to pay sums up to:

$25M P/O $25,000,000 USD of the Declarations)	in respect of each Occurrence - subject to a limit of
$25M P/O $25,000,000 USD of the Declarations)	in the aggregate as applicable per the Lead Underlying Policy, and then such aggregate(s) to apply hereon in an identical manner to the Lead Underlying Policy

in excess of Underlying Limits as follows:

$25,000,000 USD (as stated in Item 4. a) of the Declarations)	in respect of each Occurrence, but
$25,000,000 USD (as stated in Item 4. b) of the Declarations)	in the aggregate as applicable per the Lead Underlying Policy

which in turn is excess of any applicable limits and/or retentions as more fully set forth in the Lead Underlying Policy.

In the event of reduction or exhaustion of the applicable aggregate Underlying Limits by reason of sums paid thereunder as damages, whether by an Underlying Insurer or the Insured, then this Policy, subject to its terms, definitions, exclusions and conditions shall:-

1. in the event of reduction, pay in excess of such reduced Underlying Limits;

2. in the event of exhaustion, continue in force as Lead Underlying Insurance.

Defense costs and expenses shall operate in an identical manner to the Lead Underlying Policy as respects whether defense costs and expenses are included within the limits of liability or are in addition to the limits of liability.

HERETO: 100% part of 100% of the Limit of Liability and Premium stated above.
Marsh XSellence Form 10/2014 (Occ)
© 2014 by BowringMarsh, Marsh Ltd. and Marsh USA,Inc. All rights reserved.

Starr Indemnity & Liability Company

CONDITIONS

1. MAINTENANCE OF UNDERLYING INSURANCE -

It is a condition of this Policy that the Underlying Policy/ies (as stated in Items 2. a) and 2. b) of the Declarations and hereinafter referred to as "Underlying Policy/ies") shall be maintained in full force and effect, except for any reduction of the aggregate limits contained therein solely by payment of any sums covered by the Lead Underlying Policy. In the event of the Insured's failure to maintain the Underlying Policy/ies in full force and effect and except with respect to the aforementioned aggregate reduction, coverage hereunder shall not be invalid, but shall apply to the same extent that it would have applied had there been compliance with this condition.

2. ASSISTANCE & CO-OPERATION AND DUTY TO DEFEND -

A The Company shall not be called upon to assume charge of the settlement or defense of any claim made or suit brought or proceeding instituted against the Insured. However the Company shall have the right and shall be given the opportunity to associate with the Insured in the defense of any claim, suit or proceeding relative to an Occurrence where the claim, suit or proceeding involves, or appears reasonably likely to involve the Company, in which event the Insured and the Company shall co-operate in all things in the defense, investigation and settlement of such claim, suit or proceeding.

B Notwithstanding the foregoing, the Company will have the right and duty to defend any claim made, suit brought or proceeding instituted against the Insured to which this Policy applies, if;

i. The Lead Underlying Insurer as stated in Item 2. c) of the Declarations has the right and duty to defend any claim, suit or proceeding in accordance with the terms of the Lead Underlying Policy as stated in Item 2. a) of the Declarations, and;

ii. The applicable Underlying Limits as stated in Item 4. of the Declarations have been exhausted in accordance with Insuring Agreement 1. COVERAGE

The Company shall not be obligated to defend any claim, suit or proceeding after the applicable Limits of Liability of this Policy have been exhausted.

3. CANCELLATION -

The Named Insured or the Company hereon shall have the right to cancel this Policy in accordance with the cancellation provisions of the Lead Underlying Policy. Such notice shall be sent to the entity stated in Item 6. b) of the Declarations.

4. OTHER INSURANCE -

If other valid and collectible insurance is available to the Insured covering a loss also covered by this Policy, other than a Policy that is specifically written to apply in excess of this Policy, the insurance afforded by this Policy shall apply in excess of and shall not contribute with such other insurance.

5. NOTICE OF OCCURRENCE -

Whenever the Insured has information from which it may reasonably conclude that an Occurrence covered hereunder involves injuries or damages which are likely to involve this Policy, notice shall be sent to the entity stated in Item 6. a) of the Declarations as soon as practicable.

HERETO: 100% part of 100% of the Limit of Liability and Premium stated above.
Marsh XSellence Form 10/2014 (Occ)
© 2014 by BowringMarsh, Marsh Ltd. and Marsh USA,Inc. All rights reserved.

Starr Indemnity & Liability Company

Dallas, TX 1-866-519-2522

Marsh Xsellence Policy
Schedule of Underlying Insurance

Policy Number:	1000023859	**Effective Date:**	08/01/2017 at 12:01 A.M.
Named Insured:	University of Texas ROCIP VII	**Issuing Company:**	Starr Indemnity & Liability Insurance Company

The Declarations, Schedule(s), and all terms and conditions complete this insurance Policy.

Type of Policy or Coverage and Insurer, Policy Number, and Policy Period	Limits of Insurance	
A. First Underlying Insurance Policy(ies)		
Coverage: Excess Liability Carrier: Berkshire Hathaway Insurance Company Policy No.: 47-XSF-304056-01 Policy Period: 08/01/2017 to 08/31/2023	$25,000,000 $25,000,000 $25,000,000	Per Occurence Aggregate Where Applicable Products/Completed Operations Aggregate
B. Additional Underlying Insurance Policy(ies)		
Coverage: General Liability Carrier: Zurich America Policy No.: GLO0183287 Policy Period: 08/01/2017 to 08/31/2023	$2,000,000 $5,000,000 $5,000,000	Per Occurrence General Aggregate Products/Completed Operations Aggregate- 10 Years or statute, Whichever is less
Coverage: WC/EL Carrier: Zurich America Policy No.: WC0183286 Policy Period: 08/01/2017 to 08/31/2023	$1,000,000 $1,000,000 $1,000,000	Bodily Injury By Accident- Each Occurence Bodily Injury By Disease- Policy Limit Bodily Injury By Disease- Each Employee
Coverage: Excess Liability Carrier: Indeminity Insurance Company of North America Policy No.: G46798673 001 Policy Period: 08/01/2017 to 08/31/2023	$25,000,000 $25,000,000 $25,000,000	Per Occurence Aggregate Where Applicable Products/Completed Operations Aggregate

Date of Issue:	10/11/2017	Authorized Representative:	Richard Berry

Class 2- 13000

Copyright © Starr Indemnity & Liability Company. All rights reserved.
Includes copyrighted material of ISO Properties, Inc., used with its permission.

Starr Indemnity & Liability Company
Dallas, TX 1-866-519-2522

Certified Acts of Terrorism Coverage Excess of Retained Amount With Cap on Losses Endorsement No.

Policy Number: 1000023859
Named Insured: University of Texas ROCIP VII

Effective Date: 08/01/2017 at 12:01 A.M.

This endorsement modifies insurance provided under the following:

MARSH XSELLENCE POLICY

SCHEDULE

Certified Acts of Terrorism Retained Amount

A. For purposes of this endorsement, the words "you" and "your" refer to the Named Insured listed in Item 1. a) of the **DECLARATIONS**. The words "we", "us" and "our" refer to the Company.

B. Coverage provided by this Policy for sums which the Insured shall be legally obligated to pay as damages by reason of the liability covered by and as more fully defined in the Lead Underlying Policy and arising out of a "certified act of terrorism" applies in excess of the Certified Acts of Terrorism Retained Amount described in paragraph **C.** below.

C. **INSURING AGREEMENTS, 2. LIMIT OF LIABILITY** is amended to include the following:

The Certified Acts of Terrorism Retained Amount refers to the amount stated in the Schedule of this endorsement. This amount may consist of a self-insured retention, Underlying Policy/ies or a combination thereof.

The Certified Acts of Terrorism Retained Amount applies:

1. Only to sums which the Insured shall be legally obligated to pay as damages by reason of the liability covered by and as more fully defined in the Lead Underlying Policy and arising out of a "certified act of terrorism" covered under this Policy; and

2. Separately to each "certified act of terrorism".

We will pay those sums covered under this Policy only after your Certified Acts of Terrorism Retained Amount has been exhausted by means of payments for judgments or settlements. Defense expenses shall not erode the Certified Acts of Terrorism Retained Amount.

D. The **CONDITIONS** are amended to include the following:

Copyright © Starr Indemnity & Liability Company. All rights reserved.
Includes copyrighted material of ISO Properties, Inc., used with its permission.

Starr Indemnity & Liability Company

Dallas, TX 1-866-519-2522

Cap on Losses From Certified Acts of Terrorism

If aggregate insured losses attributable to terrorist acts certified under the federal Terrorism Risk Insurance Act exceed $100 billion in a calendar year and we have met our insurer deductible under the Terrorism Risk Insurance Act, we shall not be liable for the payment of any portion of the amount of such losses that exceeds $100 billion, and in such case insured losses up to that amount are subject to pro rata allocation in accordance with procedures established by the Secretary of the Treasury.

E. The following definition applies for purposes of this endorsement:

"Certified act of terrorism" means an act that is certified by the Secretary of the Treasury, in accordance with the provisions of the federal Terrorism Risk Insurance Act, to be an act of terrorism pursuant to such Act. The criteria contained in the Terrorism Risk Insurance Act for a "certified act of terrorism" include the following:

1. The act resulted in insured losses in excess of $5 million in the aggregate, attributable to all types of insurance subject to the Terrorism Risk Insurance Act; and
2. The act is a violent act or an act that is dangerous to human life, property or infrastructure and is committed by an individual or individuals as part of an effort to coerce the civilian population of the United States or to influence the policy or affect the conduct of the United States Government by coercion.

F. The terms and limitations of any terrorism exclusion, or the inapplicability or omission of a terrorism exclusion, do not serve to create coverage for any loss or damage that is otherwise excluded under this Policy.

All other terms and conditions of this Policy remain unchanged.

Signed for the Company as of the Effective Date above:

Charles H. Dangelo, President

Nehemiah E. Ginsburg, General Counsel

Copyright © Starr Indemnity & Liability Company. All rights reserved.
Includes copyrighted material of ISO Properties, Inc., used with its permission.

Starr Indemnity & Liability Company

Dallas, TX 1-866-519-2522

Disclosure Pursuant to Terrorism Risk Insurance Act

Policy Number: 1000023859 **Effective Date:** 08/01/2017 at 12:01 A.M.
Named Insured: University of Texas ROCIP VII

SCHEDULE

SCHEDULE – PART I
Terrorism Premium (Certified Acts) **This premium is the total Certified Acts premium attributable to the following Coverage Part(s), Coverage Form(s) and/or Policy(ies):** All coverages under this policy, except commercial automobile liability **Additional information, if any, concerning the terrorism premium:**
SCHEDULE – PART II **Federal share of terrorism losses** _ _ **% Year: 20** 15 (Refer to Paragraph **B.** in this endorsement.) **Federal share of terrorism losses** _ _ **% Year: 20** 16 (Refer to Paragraph **B.** in this endorsement.) **Federal share of terrorism losses** _ _ **% Year: 20** 17 (Refer to Paragraph **B.** in this endorsement.) **Federal share of terrorism losses** _ _ **% Year: 20** 18 (Refer to Paragraph **B.** in this endorsement.) **Federal share of terrorism losses** _ _ **% Year: 20** 19 (Refer to Paragraph **B.** in this endorsement.) **Federal share of terrorism losses** _ _ **% Year: 20** 20 (Refer to Paragraph **B.** in this endorsement.)
Information required to complete this Schedule, if not shown above, will be shown in the Policy Declarations.

A. Disclosure Of Premium

Copyright © Starr Indemnity & Liability Company. All rights reserved.
Includes copyrighted material of ISO Properties, Inc., used with its permission.

Starr Indemnity & Liability Company

Dallas, TX 1-866-519-2522

In accordance with the federal Terrorism Risk Insurance Act, we are required to provide you with a notice disclosing the portion of your premium, if any, attributable to coverage for terrorist acts certified under the Terrorism Risk Insurance Act. The portion of your premium attributable to such coverage is shown in the Schedule of this endorsement or in the Policy Declarations.

B. Disclosure Of Federal Participation In Payment Of Terrorism Losses

The United States Government, Department of the Treasury, will pay a share of terrorism losses insured under the federal program. The federal share equals a percentage (as shown in Part **II** of the Schedule of this endorsement or in the policy Declarations) of that portion of the amount of such insured losses that exceeds the applicable insurer deductible. However, if aggregate insured losses attributable to terrorist acts certified under the Terrorism Risk Insurance Act exceed $100 billion in a calendar year , the Treasury shall not make any payment for any portion of the amount of such losses that exceeds $100 billion.

C. Cap On Insurer Participation In Payment Of Terrorism Losses

If aggregate insured losses attributable to terrorist acts certified under the Terrorism Risk Insurance Act exceed $100 billion in a calendar year and we have met our insurer deductible under the Terrorism Risk Insurance Act, we shall not be liable for the payment of any portion of the amount of such losses that exceeds $100 billion, and in such case insured losses up to that amount are subject to pro rata allocation in accordance with procedures established by the Secretary of the Treasury.

All other terms and conditions of this Policy remain unchanged.

Signed for the Company as of the Effective Date above:

Charles H. Dangelo, President

Nehemiah E. Ginsburg, General Counsel

Copyright © Starr Indemnity & Liability Company. All rights reserved.
Includes copyrighted material of ISO Properties, Inc., used with its permission.

Starr Indemnity & Liability Company

Dallas, TX 1-866-519-2522

Texas Pollution Amendatory

Policy Number: 1000023859 **Effective Date:** 08/01/2017 at 12:01 A.M.
Named Insured: University of Texas ROCIP VII

A. SECTION V. EXCLUSIONS, exclusion **D. Pollution** is deleted in its entirety and replaced with the following:

D. Pollution

1. "Ultimate net loss" arising out of the actual, alleged or threatened discharge, dispersal, seepage, migration, release or escape of "pollutants":

a. At or from any premises, site or location which is or was at any time owned or occupied by, or rented or loaned to, any insured. However, this subparagraph does not apply to:

(1) Bodily injury if sustained within a building and caused by smoke, fumes, vapor or soot produced by or originating from equipment that is used to heat, cool or dehumidify the building, or equipment that is used to heat water for personal use, by the building's occupants or their guests;

(2) Bodily injury or property damage for which you may be held liable, if you are a contractor and the owner or lessee of such premises, site or location has been added to your policy as an additional insured with respect to your ongoing operations performed for that additional insured at that premises, site or location and such premises, site or location is not and never was owned or occupied by, or rented or loaned to, any insured, other than that additional insured; or

(3) Bodily injury or property damage arising out of heat, smoke or fumes from a "hostile fire";

b. At or from any premises, site or location which is or was at any time used by or for any insured or others for the handling, storage, disposal, processing or treatment of waste;

c. Which are or were at any time transported, handled, stored, treated, disposed of, or processed as waste by or for:

(1) Any insured; or

(2) Any person or organization for whom you may be legally responsible; or

d. At or from any premises, site or location on which any insured or any contractors or subcontractors working directly or indirectly on any insured's behalf are performing operations if the "pollutants" are brought on or to the premises, site or location in connection with such operations by such insured, contractor or subcontractor. However, this subparagraph does not apply to:

Copyright © C. V. Starr & Company and Starr Indemnity & Liability Company. All rights reserved.
Includes copyrighted material of ISO Properties, Inc., used with its permission.

Starr Indemnity & Liability Company

Dallas, TX 1-866-519-2522

(1) Bodily injury or property damage arising out of the escape of fuels, lubricants or other operating fluids which are needed to perform the normal electrical, hydraulic or mechanical functions necessary for the operation of mobile equipment or its parts, if such fuels, lubricants or other operating fluids escape from a vehicle part designed to hold, store or receive them. This exception does not apply if the bodily injury or property damage arises out of the intentional discharge, dispersal or release of the fuels, lubricants or other operating fluids, or if such fuels, lubricants or other operating fluids are brought on or to the premises, site or location with the intent that they be discharged, dispersed or released as part of the operations being performed by such insured, contractor or subcontractor;

(2) Bodily injury or property damage sustained within a building and caused by the release of gases, fumes or vapors from materials brought into that building in connection with operations being performed by you or on your behalf by a contractor or subcontractor; or

(3) Bodily injury or property damage arising out of heat, smoke or fumes from a "hostile fire".

e. At or from any premises, site or location on which any insured or any contractors or subcontractors working directly or indirectly on any insured's behalf are performing operations if the operations are to test for, monitor, clean up, remove, contain, treat, detoxify or neutralize, or in any way respond to, or assess the effects of, "pollutants".

f. That are, or that are contained in any property that is:

(1) Being transported or towed by, handled, or handled for movement into, onto or from, the covered "auto";

(2) Otherwise in the course of transit by or on behalf of the "insured"; or

(3) Being stored, disposed of, treated or processed in or upon the covered "auto";

g. Before the "pollutants" or any property in which the "pollutants" are contained are moved from the place where they are accepted by the "insured" for movement into or onto the covered "auto"; or

h. After the "pollutants" or any property in which the "pollutants" are contained are moved from the covered "auto" to the place where they are finally delivered, disposed of or abandoned by the "insured".

Paragraph **f.** above does not apply to fuels, lubricants, fluids, exhaust gases or other similar "pollutants" that are needed for or result from the normal electrical, hydraulic or mechanical functioning of the covered "auto" or its parts, if:

(1) The "pollutants" escape, seep, migrate, or are discharged, dispersed or released directly from an "auto" part designed by its manufacturer to hold, store, receive or dispose of such "pollutants"; and

(2) The "bodily injury", "property damage" or "covered pollution cost or expense" does not arise out of the operation of any:

(a) Cherry pickers and similar devices mounted on automobile or truck chassis and used to raise or lower workers; and

(b) Air compressors, pumps and generators, including spraying, welding, building cleaning, geophysical exploration, lighting or well servicing equipment.

Paragraphs **g.** and **h.** above of this exclusion do not apply to "accidents" that occur away from premises owned by or rented to an "insured" with respect to "pollutants" not in or upon a covered "auto" if:

(1) The "pollutants" or any property in which the "pollutants" are contained are upset, overturned or damaged as a result of the maintenance or use of a covered "auto"; and

Copyright © C. V. Starr & Company and Starr Indemnity & Liability Company. All rights reserved.
Includes copyrighted material of ISO Properties, Inc., used with its permission.

Starr Indemnity & Liability Company

Dallas, TX 1-866-519-2522

(2) The discharge, dispersal, seepage, migration, release or escape of the "pollutants" is caused directly by such upset, overturn or damage.

2. Any loss, cost or expense arising out of any:

a. Request, demand, order or statutory or regulatory requirement that any insured or others test for, monitor, clean up, remove, contain, treat, detoxify or neutralize, or in any way respond to, or assess the effects of, "pollutants"; or

b. Claim or suit by or on behalf of a governmental authority for damages because of testing for, monitoring, cleaning up, removing, containing, treating, detoxifying or neutralizing, or in any way responding to, or assessing the effects of, "pollutants".

However, this paragraph does not apply to liability for damages because of property damage that the insured would have in the absence of such request, demand, order or statutory or regulatory requirement, or such claim or suit by or on behalf of a governmental authority.

B. As used in this endorsement:

1. "Hostile fire" means one which becomes uncontrollable or breaks out from where it was intended to be.

2. "Pollutants" mean any solid, liquid, gaseous or thermal irritant or contaminant, including smoke, vapor, soot, fumes, acids, alkalis, chemicals and waste. Waste includes materials to be recycled, reconditioned or reclaimed.

All other terms and conditions of this Policy remain unchanged.

Signed for the Company as of the Effective Date above:

Charles H. Dangelo, President

Nehemiah E. Ginsburg, General Counsel

Copyright © C. V. Starr & Company and Starr Indemnity & Liability Company. All rights reserved.
Includes copyrighted material of ISO Properties, Inc., used with its permission.

Starr Indemnity & Liability Company

Dallas, TX 1-866-519-2522

Texas Changes – Cancellation and Nonrenewal

Policy Number: 1000023859 **Effective Date:** 08/01/2017 at 12:01 A.M.
Named Insured: University of Texas ROCIP VII

A. Paragraphs **2.** of **SECTION IV. CONDITIONS,** condition **C. Cancellation** is deleted and replaced with the following:

2. We may cancel this Policy by mailing or delivering to the first Named Insured shown in the Declarations written notice of cancellation, stating the reason for cancellation, at least 10 days before the effective date of cancellation.

However if this Policy covers a condominium association, and the condominium property contains at least one residence or the condominium declarations conform with the Texas Uniform Condominium Act, then the notice of cancellation, as described above, will be provided to the First Named Insured 30 days before the effective date of cancellation. We will also provide 30 days' written notice to each unit-owner to whom we issued a certificate or memorandum of insurance, by mailing or delivering the notice to each last mailing address known to us.

The permissible reasons for cancellation are as follows:

a. If this Policy has been in effect for 60 days or less, we may cancel for any reason except, that under the provisions of the Texas Insurance Code, we may not cancel this Policy solely because the policyholder is an elected official.

b. If this Policy has been in effect for more than 60 days, or if it is a renewal or continuation of a Policy issued by us, we may cancel only for one or more of the following reasons:

(1) Fraud in obtaining coverage;

(2) Failure to pay premiums when due;

(3) An increase in hazard within the control of the Insured which would produce an increase in rate;

(4) Loss of our reinsurance covering all or part of the risk covered by this Policy; or

(5) If we have been placed in supervision, conservatorship or receivership and the cancellation is approved or directed by the supervisor, conservator or receiver.

Copyright © C. V. Starr & Company and Starr Indemnity & Liability Company. All rights reserved.
Includes copyrighted material of ISO Properties, Inc., used with its permission.

Starr Indemnity & Liability Company

Dallas, TX 1-866-519-2522

B. The following condition is added to **SECTION IV. CONDITIONS** and supersedes any other provision to the contrary:

Nonrenewal

1. We may elect not to renew this Policy except, that under the provisions of the Texas Insurance Code, we may not refuse to renew this Policy solely because the policyholder is an elected official.

2. This Paragraph, **2.**, applies unless the Policy qualifies under Paragraph **3.** below.

If we elect not to renew this Policy, we may do so by mailing or delivering to the first Named Insured, at the last mailing address known to us, written notice of nonrenewal, stating the reason for nonrenewal, at least 60 days before the expiration date. If notice is mailed or delivered less than 60 days before the expiration date, this Policy will remain in effect until the 61st day after the date on which the notice is mailed or delivered. Earned premium for any period of coverage that extends beyond the expiration date will be computed pro rata based on the previous year's premium.

3. If this Policy covers a condominium association, and the condominium property contains at least one residence or the condominium declarations conform with the Texas Uniform Condominium Act, then we will mail or deliver written notice of nonrenewal, at least 30 days before the expiration or anniversary date of the Policy, to:

a. The first Named Insured; and

b. Each unit-owner to whom we issued a certificate or memorandum of insurance.

We will mail or deliver such notice to each last mailing address known to us.

4. If notice is mailed, proof of mailing will be sufficient proof of notice.

5. The transfer of a policyholder between admitted companies within the same insurance group is not considered a refusal to renew.

All other terms and conditions of this Policy remain unchanged.

Copyright © C. V. Starr & Company and Starr Indemnity & Liability Company. All rights reserved.
Includes copyrighted material of ISO Properties, Inc., used with its permission.

Starr Indemnity & Liability Company

Dallas, TX 1-866-519-2522

Signed for the Company as of the Effective Date above:

Charles H. Dangelo, President

Nehemiah E. Ginsburg, General Counsel

Copyright © C. V. Starr & Company and Starr Indemnity & Liability Company. All rights reserved.
Includes copyrighted material of ISO Properties, Inc., used with its permission.

Starr Indemnity & Liability Company

Dallas, TX 1-866-519-2522

Texas Changes – Pollution Exclusion

Policy Number: 1000023859 **Effective Date:** 08/01/2017 at 12:01 A.M.
Named Insured: University of Texas ROCIP VII

A. SECTION V. EXCLUSIONS, exclusion **D. Pollution** is deleted in its entirety and replaced with the following:

D. Pollution

1. "Ultimate Net Loss" arising out of an actual, alleged or threatened "pollution incident" at any time.

2. Loss, cost or expense arising out of any:

   a. Request, demand, order or statutory or regulatory requirement that any Insured or others test for, monitor, clean up, remove, contain, treat, detoxify or neutralize, or in any way respond to, or assess the effects of "pollution incidents"; or

   b. Claim or suit by or on behalf of a governmental authority for damages because of testing for, monitoring, cleaning up, removing, containing, treating, detoxifying or neutralizing, or in any way responding to, or assessing the effects of "pollution incidents".

This exclusion does not apply if valid "Underlying Insurance" for the "pollution incident" risks described above exists or would have existed but for the exhaustion of the applicable limits of the Underlying Insurance. Coverage provided under this Policy will follow the terms, definitions, conditions, exclusions and limitations of the First Underlying Insurance Policy(ies).

B. The following definitions are added to **SECTION III. DEFINITIONS:**

1. "Environmental damage" means the injurious presence in or upon land, the atmosphere, or any watercourse or body of water of solid, liquid, gaseous or thermal contaminants, irritants or "pollutants".

2. "Pollutants" means any solid, liquid, gaseous or thermal irritant or contaminant, including smoke, vapor, soot, fumes, acids, alkalis, chemicals and waste. Waste includes materials to be recycled, reconditioned or reclaimed.

3. "Pollution incident" means emission, discharge, release or escape of "pollutants" into or upon land, the atmosphere, or any watercourse or body of water, provided that such emission, discharge, release or escape results in "environmental damage". The entirety of any such emission, discharge, release or escape shall be deemed to be one "pollution incident".

Copyright © C. V. Starr & Company and Starr Indemnity & Liability Company. All rights reserved.
Includes copyrighted material of ISO Properties, Inc., used with its permission.

Starr Indemnity & Liability Company

Dallas, TX 1-866-519-2522

All other terms and conditions of this Policy remain unchanged.

Signed for the Company as of the Effective Date above:

Charles H. Dangelo, President

Nehemiah E. Ginsburg, General Counsel

Copyright © C. V. Starr & Company and Starr Indemnity & Liability Company. All rights reserved.
Includes copyrighted material of ISO Properties, Inc., used with its permission.

Starr Indemnity & Liability Company

Dallas, TX 1-866-519-2522

Texas Changes

Policy Number: 1000023859 **Effective Date:** 08/01/2017 at 12:01 A.M.
Named Insured: University of Texas ROCIP VII

The following conditions are added to **SECTION IV. CONDITIONS**:

1. **Changes In Liability Coverage**

   a. With regard to coverage for bodily injury, property damage and personal and advertising injury, unless we are prejudiced by the Insured's or your failure to comply with the requirement, no provision of this Policy requiring you or any Insured to give notice of an accident, occurrence, wrongful act, claim or suit, or forward demands, notices, summonses or legal papers in connection with a claim or suit, will bar coverage under this Policy.

   However, Paragraph **1.a.** does not apply with respect to the ownership, maintenance or use of covered autos.

2. **Claims Handling Procedures**

   We will notify you in writing of:

   a. An initial offer to compromise or settle a claim made or suit brought against any Insured. The notice will be given no later than the 10th day after the date on which the offer is made.

   b. Any settlement of a claim made or suit brought against the Insured. The notice will be given not later than the 30th day after the date of settlement.

All other terms and conditions of this Policy remain unchanged.

Signed for the Company as of the Effective Date above:

Charles H. Dangelo, President

Nehemiah E. Ginsburg, General Counsel

Copyright © C. V. Starr & Company and Starr Indemnity & Liability Company. All rights reserved.
Includes copyrighted material of ISO Properties, Inc., used with its permission.

Starr Indemnity & Liability Company

Dallas, TX 1-866-519-2522

Limitation of Coverage to Designated Premises or Project

Policy Number: 1000023859
Named Insured: University of Texas ROCIP VII

Effective Date: 08/01/2017 at 12:01 A.M.

SCHEDULE

Premises:
Project: REFER TO MONTHLY REPORT IN FILE WHICH INCLUDES EACH PROJECT IDENTIFIED IN THE MARSH MONTHLY REPORT FOR THE UNIVERSITY OF TEXAS SYSTEM ROLLING OWNER CONTROLLED INSURANCE PROGRAM PHASE VII WITH COVERAGE FOR SUCH PROJECT BEGINNING ON THE NOTICE TO PROCEED DATE AS LISTED IN THE REPORT.

This insurance applies only to "Ultimate Net Loss" arising out of:

1. The ownership, maintenance or use of the premises shown in the Schedule and operations necessary or incidental to those premises; or
2. The project shown in the Schedule.

All other terms and conditions of this Policy remain unchanged.

Signed for the Company as of the Effective Date above:

Charles H. Dangelo, President

Nehemiah E. Ginsburg, General Counsel

Copyright © C. V. Starr & Company and Starr Indemnity & Liability Company. All rights reserved.
Includes copyrighted material of ISO Properties, Inc., used with its permission.

Starr Indemnity & Liability Company

Dallas, TX 1-866-519-2522

Copyright © C. V. Starr & Company and Starr Indemnity & Liability Company. All rights reserved.
Includes copyrighted material of ISO Properties, Inc., used with its permission.

Starr Indemnity & Liability Company

Starr Indemnity Excess Starr Companies Program
Claim Reporting Guidelines

Send all Excess Casualty Loss Notices to:

York Risk Services Group, Inc.
Attn OSC

P.O. Box 183188
Columbus, OH 43218-3188

Claims E-mail: 4869excessclaims@yorkrsg.com
Claims Fax: (866) 695-3651

Our preferred method of reporting is by email but Loss Notices may be submitted via certified mail or faxed. If immediate attention is needed, e-mailing or faxing the Loss Notice and/or Claim or Litigation information is strongly recommended. If you have a claim related question and need to contact York by telephone, please do so at (866) 391-9675.

Consult Your Policy For Loss Reporting Requirements

Your policy states when to report a loss and details the information to be submitted with a First Notice of Loss. This is often found in the General Conditions section, although it may be changed by an endorsement. Additionally, the following information/documentation will always be helpful in assisting us with our evaluation.

- Citing Starr Indemnity's policy, or claim number, in all correspondence.
- Providing a copy of any suit, demand for arbitration or mediation, a governmental agency notice, claim letter or any similar notice.
- Sending a copy of any internal reports related to the loss.
- Forwarding copies of status reports prepared by your defense counsel and/or your claim handler, if the case has been pending for a period of time.

Starr Indemnity will always acknowledge each First Notice of Loss, initiate contact to open lines of communication, and will request any additional information that may be needed. Our formal claims acknowledgment will identify Starr Indemnity's person responsible for handling your reported Claim, and their specific contact information.

If you have questions or would like to discuss a specific loss with one of our Claims Team members, please feel free to contact us. Thank you.

NP 93 98 10 13

IMPORTANT NOTICE

YOUR ACTION REQUIRED

THANK YOU FOR PLACING THIS EXCESS POLICY WITH US. WE TRUST THAT THIS POLICY WAS ISSUED ACCORDING TO YOUR INSTRUCTIONS.

AS A REMINDER, WITHIN 45 DAYS OF THE EFFECTIVE DATE, PLEASE FORWARD A COMPLETE COPY OF THE LEAD UMBRELLA. THIS COPY MUST INCLUDE THE FOLLOWING:

- DECLARATIONS PAGE
- INSURING AGREEMENT
- COPIES OF ALL FORMS AND ENDORSEMENTS

© 2013 Liberty Mutual Insurance. All rights reserved.
Includes copyrighted material of Insurance Services Office, Inc., with its permission.

08/08/2017

THE UNIVERSITY OF TEXAS SYSTEM

ECO (23) 58 07 14 29

From: 08/01/2017 To: 08/01/2023

MARSH USA INC
1166 AVENUE OF THE AMERICAS
NEW YORK, NY 10036 - 2708

TERRORISM INSURANCE PREMIUM DISCLOSURE AND OPPORTUNITY TO REJECT

This notice contains important information about the Terrorism Risk Insurance Act and its effect on your policy. Please read it carefully.

THE TERRORISM RISK INSURANCE ACT

The Terrorism Risk Insurance Act, including all amendments ("TRIA" or the "Act"), establishes a program to spread the risk of catastrophic losses from certain acts of terrorism between insurers and the federal government. If an individual insurer's losses from certified acts of terrorism exceed a specified deductible amount, the government will reimburse the insurer for a percentage of losses (the "Federal Share") paid in excess of the deductible, but only if aggregate industry losses from such acts exceed the "Program Trigger". An insurer that has met its insurer deductible is not liable for any portion of losses in excess of $100 billion per year. Similarly, the federal government is not liable for any losses covered by the Act that exceed this amount. If aggregate insured losses exceed $100 billion, losses up to that amount may be pro-rated, as determined by the Secretary of the Treasury.

The Federal Share and Program Trigger by calendar year are:

Calendar Year	Federal Share	Program Trigger
2015	85%	$100,000,000
2016	84%	$120,000,000
2017	83%	$140,000,000
2018	82%	$160,000,000
2019	81%	$180,000,000
2020	80%	$200,000,000

MANDATORY OFFER OF COVERAGE FOR "CERTIFIED ACTS OF TERRORISM" AND DISCLOSURE OF PREMIUM

TRIA requires insurers to make coverage available for any loss that occurs within the United States (or outside of the U.S. in the case of U.S. missions and certain air carriers and vessels), results from a "certified act of terrorism" AND that is otherwise covered under your policy.

A "certified act of terrorism" means:

> [A]ny act that is certified by the Secretary [of the Treasury], in consultation with the Secretary of Homeland Security, and the Attorney General of the United States.
>
> (i) to be an act of terrorism;

© 2015 Liberty Mutual Insurance

(ii) to be a violent act or an act that is dangerous to
  (I) human life;
  (II) property; or
  (III) infrastructure;

(iii) to have resulted in damage within the United States, or outside of the United States in the case of
  (I) an air carrier (as defined in section 40102 of title 49, United States Code) or United States flag vessel (or a vessel based principally in the United States, on which United States income tax is paid and whose insurance coverage is subject to regulation in the United States); or
  (II) the premises of a United States mission; and

(iv) to have been committed by an individual or individuals as part of an effort to coerce the civilian population of the United States or to influence the policy or affect the conduct of the United States Government by coercion.

REJECTING TERRORISM INSURANCE COVERAGE - WHAT YOU MUST DO

We have included in your policy coverage for losses resulting from "certified acts of terrorism" as defined above.

THE PREMIUM CHARGE FOR THIS COVERAGE APPEARS ON THE DECLARATIONS PAGE OF THE POLICY AND DOES NOT INCLUDE ANY CHARGES FOR THE PORTION OF LOSS COVERED BY THE FEDERAL GOVERNMENT UNDER THE ACT. If we are providing you with a quote, the premium charge will also appear on your quote as a separate line item charge.

IF YOU CHOOSE TO REJECT THIS COVERAGE, PLEASE CHECK THE BOX BELOW, SIGN THE ACKNOWLEDGEMENT, AND RETURN THIS FORM TO THE ADDRESS BELOW: **Please ensure any rejection is received within (30) days of the effective date of your policy.**

Before making a decision to reject terrorism insurance, refer to the Underlying Coverage Requirement located at the end of this Notice.

☐ I hereby reject this offer of coverage. I understand that by rejecting this offer, I will have no coverage for losses arising from a "certified acts of terrorism" and my policy will be endorsed accordingly.

Policyholder/Applicant's Signature	Print Name	Date Signed
_____	_____	_____

Named Insured	Policy Number
THE UNIVERSITY OF TEXAS SYSTEM	ECO (23) 58 07 14 29

Policy Effective/Expiration Date
08/01/2017 - 08/01/2023

UNDERLYING COVERAGE REQUIREMENT

This policy will apply to Terrorism Coverage only in excess of the total amounts stated as the applicable limits of the underlying policies listed in the Schedule of Underlying Insurance and the applicable limits of any other insurance providing coverage to you during the Policy Period.

If you fail to comply with this Underlying Coverage Requirement and you do not maintain your underlying limits as scheduled, we will only be liable to the same extent that we would have been had you fully complied with this requirement.

IF YOU REJECTED THIS COVERAGE, PLEASE RETURN THIS FORM TO:

Attn: Commercial Lines Division - Terrorism
P.O. Box 66400
London, KY 40742-6400

The summary of the Act and the coverage under your policy contained in this notice is necessarily general in nature. Your policy contains specific terms, definitions, exclusions and conditions. In case of any conflict, your policy language will control the resolution of all coverages questions. Please read your policy carefully.

If you have any questions regarding this notice, please contact your agent.

© 2015 Liberty Mutual Insurance

Liberty Mutual. INSURANCE

Coverage is Provided In:
Ohio Casualty Insurance Company

Policy No.: ECO (23) 58 07 14 29

Following Form Excess Liability Policy Declarations

Item 1. a) Named Insured:
THE UNIVERSITY OF TEXAS SYSTEM

and as more fully set forth in the Lead Underlying Policy

b) Address of Named Insured:
220 W 7TH STREET
AUSTIN, TX 78701

Agent Name, Mailing Address & Phone No.:
(212)345-5000
MARSH USA INC
1166 AVENUE OF THE AMERICAS
NEW YORK, NY 10036 - 2708

Item 2.
a) Lead Underlying Policy No: 47-XSF-304056-01
b) All other Underlying Policy No(s): See Schedule of Underlying Insurance
c) Lead Underlying Insurer: BERKSHIRE HATHAWAY SPECIALTY INSURANCE COMPANY
d) All other Underlying Insurer(s): See Schedule of Underlying Insurance

Item 3. Limits of Liability:
(Insuring Agreement 2.)
a) $ 25,000,000 Each Occurrence
b) $ 25,000,000 Aggregate

Item 4. Underlying Limits:
(Insuring Agreement 2.)
a) $ 50,000,000 Each Occurrence
b) $ 50,000,000 Aggregate
which in turn is excess of any applicable limits and/or retentions as more fully set forth in the Lead Underlying Policy

Item 5. Policy Period:
From: 08/01/2017 to 08/01/2023 both days at 12:01 a.m. Standard Time at the address of the Named Insured.

Item 6. Notice to:
(Conditions 3. and 5.)

a) Notice of Occurrence:
Ohio Casualty Insurance Company
9450 Seward Road, Fairfield, OH 45014
CLClaimReports@libertymutual.com
1-800-362-0000

b) All other Notices:
To Insured: Per Item 1. above
To the Company:
Liberty Mutual Insurance
One Battery Park Plaza, 30th Floor
New York, NY 10004

Item 7. Premium: $ (100% Flat Annual)

Certified Acts of Terrorism Coverage $ (Included)

Total Advance Charges $
Note: This is not a bill

Issue Date 08/08/2017

© 2014 Liberty Mutual Insurance
Includes copyrighted material of Marsh USA Inc., with its permission.

Item 8. Policy Forms and Endorsements:

NP 73 12 01 15	Policyholder Disclosure Notice of Insurance Coverage for Certified Acts of Terrorism
CE 75 00 01 15	Marsh XSellence Following Form Excess Liability Policy
CE 75 10 01 15	Non Following Form Endorsement
CE 75 13 01 15	Cap on Losses from Certified Acts of Terrorism
CE 75 06 01 15	Limits of Insurance Amendment - Quota Share
CE 75 07 01 15	General Endorsement - Other Insurance Amendatory Endorsement
CE 75 05 01 15	Nuclear Exclusion
CE 75 04 01 15	Asbestos Exclusion

In Witness Whereof, we have caused this Policy to be signed by our authorized officers.

Dexter Robert Legg

Dexter R. Legg

Secretary

James Paul Condrin, III

President

© 2014 Liberty Mutual Insurance
Includes copyrighted material of Marsh USA Inc., with its permission.

Coverage is Provided In:
Ohio Casualty Insurance Company

Policy No.: ECO (23) 58 07 14 29

SCHEDULE OF UNDERLYING INSURANCE

UNDERLYING INSURANCE: CARRIER, POLICY NUMBER AND PERIOD	TYPE OF COVERAGE	LIMITS OF INSURANCE
FIRST UNDERLYING INSURANCE BERKSHIRE HATHAWAY SPECIALTY INSURANCE COMPANY 47-XSF-304056-01 08/01/2017 - 08/01/2023	LEAD UMBRELLA	$25,000,000 EACH OCCURRENCE $25,000,000 AGGREGATE $25,000,000 PRODUCTS-COMPLETED OPERATIONS AGGREGATE
OTHER UNDERLYING INSURANCE INDEMNITY INSURANCE COMPANY OF NORTH AMERICA XSM G46798673 001 08/01/2017 - 08/01/2023	EXCESS LIABILITY	$25,000,000 EACH OCCURRENCE $25,000,000 AGGREGATE EXCESS OF $25,000,000 EACH OCCURRENCE $25,000,000 AGGREGATE
OTHER UNDERLYING INSURANCE STARR INDEMNITY & LIABILITY COMPANY 1000023859 08/01/2017 - 08/01/2023	EXCESS LIABILITY QUOTA SHARE PARTNER	$25,000,000 EACH OCCURRENCE $25,000,000 AGGREGATE PART OF $50,000,000 EACH OCCURRENCE $50,000,000 AGGREGATE EXCESS OF $50,000,000 EACH OCCURRENCE $50,000,000 AGGREGATE

© 2014 Liberty Mutual Insurance
Includes copyrighted material of Marsh USA Inc., with its permission.

FOLLOWING FORM EXCESS LIABILITY POLICY

INSURING AGREEMENTS

1. COVERAGE

The Company hereby agrees, subject to the terms, definitions, exclusions and conditions contained in this Policy, to pay those sums which the Insured shall be legally obligated to pay as damages by reason of the liability covered by and as more fully defined in the Lead Underlying Policy (as stated in Item 2. a) of the Declarations and hereinafter referred to as "Lead Underlying Policy"); provided always however, that this Policy shall not apply until the Insured and/or the Underlying Insurers (as stated in Items 2. c) and 2. d) of the Declarations and hereinafter referred to as "Underlying Insurers") have paid or have been held liable to pay the full amount of the Underlying Limits for damages covered by the Lead Underlying Policy in accordance with Insuring Agreement 2.

The Company agrees that, except as may otherwise be endorsed to this Policy, this Policy will follow:

1. The same terms, definitions, exclusions and conditions as are, at inception hereof, contained in the Lead Underlying Policy, and;

2. All subsequent changes made to the terms, definitions, exclusions and conditions of the Lead Underlying Policy that do not broaden the scope of the coverage already provided.

Notwithstanding the foregoing, the following changes to the Lead Underlying Policy made after inception hereof shall not be binding upon the Company unless otherwise agreed in writing by the Company:

(a) Any change which is subject to an additional premium charge,

(b) The inclusion of an additional coverage extension endorsement,

(c) Any change to the terms, definitions, exclusions and conditions that broadens the scope of the coverage already provided.

It is, however, specifically agreed that if any of the Underlying Policy/ies stated in Item 2. b) of the Declarations exclude or limit any part of the coverage provided by the Lead Underlying Policy stated in Item 2. a) of the Declarations, then this Policy shall not drop down to apply in the place of such excluded or limited coverage and the Insured shall be considered as a self-insurer to the extent that there is no other available insurance to cover the deficit.

2. LIMITS OF LIABILITY

The Company shall be liable only to pay sums up to:

USD (as stated in Item 3. a) of the Declarations)	in respect of each Occurrence - subject to a limit of
USD (as stated in Item 3. b) of the Declarations)	in the aggregate as applicable per the Lead Underlying Policy, and then such aggregate(s) to apply hereon in an identical manner to the Lead Underlying Policy

© 2014 Liberty Mutual Insurance
Includes copyrighted material of Marsh USA Inc., with its permission.

in excess of Underlying Limits as follows:

USD (as stated in Item 4. a) of the Declarations)	in respect of each Occurrence, but
USD (as stated in Item 4. b) of the Declarations)	in the aggregate as applicable per the Lead Underlying Policy

which in turn is excess of any applicable limits and/or retentions as more fully set forth in the Lead Underlying Policy.

In the event of reduction or exhaustion of the applicable aggregate Underlying Limits by reason of sums paid thereunder as damages, whether by an Underlying Insurer or the Insured, then this Policy, subject to its terms, definitions, exclusions and conditions shall:-

1. In the event of reduction, pay in excess of such reduced Underlying Limits;
2. In the event of exhaustion, continue in force as Lead Underlying Insurance.

Defense costs and expenses shall operate in an identical manner to the Lead Underlying Policy as respects whether defense costs and expenses are included within the limits of liability or are in addition to the limits of liability.

CONDITIONS

1. MAINTENANCE OF UNDERLYING INSURANCE

It is a condition of this Policy that the Underlying Policy/ies (as stated in Items 2. a) and 2. b) of the Declarations and hereinafter referred to as "Underlying Policy/ies") shall be maintained in full force and effect, except for any reduction of the aggregate limits contained therein solely by payment of any sums covered by the Lead Underlying Policy. In the event of the Insured's failure to maintain the Underlying Policy/ies in full force and effect and except with respect to the aforementioned aggregate reduction, coverage hereunder shall not be invalid, but shall apply to the same extent that it would have applied had there been compliance with this condition.

2. ASSISTANCE & CO-OPERATION AND DUTY TO DEFEND

A. The Company shall not be called upon to assume charge of the settlement or defense of any claim made or suit brought or proceeding instituted against the Insured. However the Company shall have the right and shall be given the opportunity to associate with the Insured in the defense of any claim, suit or proceeding relative to an Occurrence where the claim, suit or proceeding involves, or appears reasonably likely to involve the Company, in which event the Insured and the Company shall co-operate in all things in the defense, investigation and settlement of such claim, suit or proceeding.

B. Notwithstanding the foregoing, the Company will have the right and duty to defend any claim made, suit brought or proceeding instituted against the Insured to which this Policy applies, if;

i. The Lead Underlying Insurer as stated in Item 2. c) of the Declarations has the right and duty to defend any claim, suit or proceeding in accordance with the terms of the Lead Underlying Policy as stated in Item 2. a) of the Declarations, and;

ii. The applicable Underlying Limits as stated in Item 4. of the Declarations have been exhausted in accordance with Insuring Agreement 1. COVERAGE

The Company shall not be obligated to defend any claim, suit or proceeding after the applicable Limits of Liability of this Policy have been exhausted.

© 2014 Liberty Mutual Insurance
Includes copyrighted material of Marsh USA Inc., with its permission.

3. CANCELLATION

The Named Insured or the Company hereon shall have the right to cancel this Policy in accordance with the cancellation provisions of the Lead Underlying Policy. Such notice shall be sent to the entity stated in Item 6. b) of the Declarations.

4. OTHER INSURANCE

If other valid and collectible insurance is available to the Insured covering a loss also covered by this Policy, other than a Policy that is specifically written to apply in excess of this Policy, the insurance afforded by this Policy shall apply in excess of and shall not contribute with such other insurance.

5. NOTICE OF OCCURRENCE

Whenever the Insured has information from which it may reasonably conclude that an Occurrence covered hereunder involves injuries or damages which are likely to involve this Policy, notice shall be sent to the entity stated in Item 6. a) of the Declarations as soon as practicable.

© 2014 Liberty Mutual Insurance
Includes copyrighted material of Marsh USA Inc., with its permission.

CE 75 10 01 15

THIS ENDORSEMENT CHANGES THE POLICY. PLEASE READ IT CAREFULLY.

NON FOLLOWING FORM ENDORSEMENT

This endorsement modifies insurance provided under the following:

FOLLOWING FORM EXCESS LIABILITY POLICY

Notwithstanding any other provisions of this Policy, it is agreed that this Policy shall not provide coverage afforded by the Lead Underlying Policy for the following:

Crisis Management or Crisis Response Endorsement
Accident Insurance Endorsement
Uninsured/Underinsured Motorists (UM/UIM) Endorsement
Liberalization Clause
Sublimit of liability, unless such sublimit is specifically endorsed to this Policy.

This endorsement does not change any other provision of the policy.

© 2014 Liberty Mutual Insurance

CE 75 13 01 15

THIS ENDORSEMENT CHANGES THE POLICY. PLEASE READ IT CAREFULLY.

CAP ON LOSSES FROM CERTIFIED ACTS OF TERRORISM

This endorsement modifies insurance provided under the following:

FOLLOWING FORM EXCESS LIABILITY POLICY

If aggregate insured losses attributable to terrorist acts certified under the federal Terrorism Risk Insurance Act exceed $100 billion in a Program Year (January 1 through December 31) and we have met our insurer deductible under the Terrorism Risk Insurance Act, we shall not be liable for the payment of any portion of the amount of such losses that exceeds $100 billion, and in such case insured losses up to that amount are subject to pro rata allocation in accordance with procedures established by the Secretary of the Treasury.

"Certified act of terrorism" means an act that is certified by the Secretary of the Treasury, in concurrence with the Secretary of State and the Attorney General of the United States, to be an act of terrorism pursuant to the federal Terrorism Risk Insurance Act. The criteria contained in the Terrorism Risk Insurance Act for a "certified act of terrorism" include the following:

1. The act resulted in insured losses in excess of $5 million in the aggregate, attributable to all types of insurance subject to the Terrorism Risk Insurance Act; and

2. The act is a violent act or an act that is dangerous to human life, property or infrastructure and is committed by an individual or individuals as part of an effort to coerce the civilian population of the United States or to influence the policy or affect the conduct of the United States Government by coercion.

This endorsement does not change any other provision of the policy.

© 2014 Liberty Mutual Insurance
Includes copyrighted material of Insurance Services Office, Inc., with its permission.

CE 75 06 01 15

THIS ENDORSEMENT CHANGES THE POLICY. PLEASE READ IT CAREFULLY.

LIMITS OF LIABILITY AMENDMENT – QUOTA SHARE

This endorsement modifies insurance provided under the following:

FOLLOWING FORM EXCESS LIABILITY POLICY

The limits of liability for this policy shown in Item 3 of the Declarations apply as follows:

$	25,000,000	Each Occurrence
$	25,000,000	Aggregate Limit

50.00 % Quota Share Part of:

$	50,000,000	Each Occurrence
$	50,000,000	Aggregate Limit

Excess of:

$	50,000,000	Each Occurrence
$	50,000,000	Aggregate Limit

Schedule of Quota Share Layer Participants:

Participating Insurer / Policy Number		Policy Limits	Part of Layer Limit	
Starr Indemnity & Liability Company	/ 1000023859	$ 25,000,000	part of $	50,000,000
	/	$	part of $	
	/	$	part of $	

Our liability and that of the Quota Share Layer Participant(s) shall be several and not joint. We will not be liable under this insurance for any amount in excess of our Quota Share Part or the amounts stated in Item 3. Limits of Liability of the Following Form Excess Liability Policy Declarations regardless of any changes in circumstances, including, but not limited to, change in terms, cancellation, removal or bankruptcy of any Quota Share Layer Participant.

In the event that any other Quota Share Layer Participant listed above restricts coverage, this insurance will be subject to such restrictions. In no event shall this insurance grant broader coverage than would be provided by any other Quota Share Layer Participant listed above.

This endorsement does not change any other provision of the policy.

© 2014 Liberty Mutual Insurance

CE 75 07 01 15

THIS ENDORSEMENT CHANGES THE POLICY. PLEASE READ IT CAREFULLY.

GENERAL ENDORSEMENT

The policy is amended as follows:

CONDITIONS, Section 4., OTHER INSURANCE is deleted and replaced by the following:

This Policy shall not seek contribution from other valid and collectible insurance available to the Insured. However, this Other Insurance condition does not apply with respect to the Lead Underlying Policy and any Underlying Policies."

All other terms and conditions of this Policy remain unchanged.

© 2014 Liberty Mutual Insurance
Includes copyrighted material of Insurance Services Office, Inc., with its permission.

CE 75 05 01 15

THIS ENDORSEMENT CHANGES THE POLICY. PLEASE READ IT CAREFULLY.

NUCLEAR EXCLUSION

This endorsement modifies insurance provided under the following:

FOLLOWING FORM EXCESS LIABILITY POLICY

This insurance does not apply to:

A. Any liability, damages, loss, injury, demand, claim or suit:

1. With respect to which an Insured under the policy is also an Insured under a nuclear energy liability policy issued by Nuclear Energy Liability Insurance Association, Mutual Atomic Energy Liability Underwriters, Nuclear Insurance Association of Canada or any of their successors, or would be an Insured under any such policy but for its termination upon exhaustion of its limits of liability; or

2. Resulting from the "hazardous properties" of "nuclear material" and with respect to which **(a)** a person or organization is required to maintain financial protection pursuant to the Atomic Energy Act of 1954, or any law amendatory thereof, or **(b)** the Insured is, or had this policy not been issued would be, entitled to indemnity from the United States of America, or any agency thereof, under any agreement entered into by the United States of America, or any agency thereof, with any person or organization.

B. Any liability, damages, loss, injury, demand, claim or suit resulting from the "hazardous properties" of "nuclear material", if:

1. The "nuclear material" **(a)** is at any "nuclear facility" owned by, or operated by or on behalf of, an Insured or **(b)** has been discharged or dispersed therefrom;

2. The "nuclear material" is contained in "spent fuel" or "waste" at any time possessed, handled, used, processed, stored, transported or disposed of by or on behalf of an Insured; or

3. The bodily injury or property damage arises out of the furnishing by an Insured of services, materials, parts or equipment in connection with the planning, construction, maintenance, operation or use of any "nuclear facility", but if such facility is located within the United States of America, its territories or possessions or Canada, this Exclusion **B.3.** applies only to "property damage" to such "nuclear facility" and any property thereat.

C. As used in this endorsement:

1. "Hazardous properties" includes radioactive, toxic or explosive properties.

2. "Nuclear material" means "source material", "special nuclear material" or "by-product material".

3. "Source material", "special nuclear material", and "by-product material" have the meanings given them in the Atomic Energy Act of 1954 or in any law amendatory thereof.

4. "Spent fuel" means any fuel element or fuel component, solid or liquid, which has been used or exposed to radiation in a "nuclear reactor".

© 2014 Liberty Mutual Insurance

5. "Waste" means any "waste" material **(a)** containing "by-product material" other than the tailings or wastes produced by the extraction or concentration of uranium or thorium from any ore processed primarily for its "source material" content, and **(b)** resulting from the operation by any person or organization of any "nuclear facility" included under the first two paragraphs of the definition of "nuclear facility".

6. "Nuclear facility" means:

   a. Any "nuclear reactor";

   b. Any equipment or device designed or used for (1) separating the isotopes of uranium or plutonium, (2) processing or utilizing "spent fuel", or (3) handling, processing or packaging "waste";

   c. Any equipment or device used for the processing, fabricating or alloying of "special nuclear material" if at any time the total amount of such material in the custody of any Insured at the premises where such equipment or device is located consists of or contains more than 25 grams of plutonium or uranium 233 or any combination thereof, or more than 250 grams of uranium 235;

   d. Any structure, basin, excavation, premises or place prepared or used for the storage or disposal of "waste";

   and includes the site on which any of the foregoing is located, all operations considered on such site and all premises used for such operations.

7. "Nuclear reactor" means any apparatus designed or used to sustain nuclear fission in a self-supporting chain reaction or to contain a critical mass of fissionable material.

8. "Property damage" includes all forms of radioactive contamination of property.

This endorsement does not change any other provision of this policy.

© 2014 Liberty Mutual Insurance

CE 75 04 01 15

THIS ENDORSEMENT CHANGES THE POLICY. PLEASE READ IT CAREFULLY.

ASBESTOS EXCLUSION

This endorsement modifies insurance provided under the following:

FOLLOWING FORM EXCESS LIABILITY POLICY

This insurance does not apply to:

Any liability, damages, loss, injury, demand, claim or suit arising out of or caused by, or allegedly caused by:

1. Asbestos, asbestos products, asbestos-containing materials or products, asbestos fibers or asbestos dust, including, but not limited to, manufacture, mining, use, sale, installation, removal, or distribution activities;

2. Exposure to testing for, monitoring of, cleaning up, removing, containing or treating of asbestos, asbestos products, asbestos-containing materials or products, asbestos fibers or asbestos dust; or

3. Any obligation to investigate, settle or defend, or indemnify any person against any claim or suit arising out of or related in any way, either directly or indirectly, to asbestos, asbestos products, asbestos-containing materials or products, asbestos fibers or asbestos dust.

This endorsement does not change any other provision of this policy.

© 2014 Liberty Mutual Insurance

SECTION 01 31 00 - PROJECT ADMINISTRATION

PART 1 - GENERAL

1.1. RELATED DOCUMENTS

1.1.1. Contractor's attention is specifically directed, but not limited, to the Uniform General Conditions for University of Texas System Building Construction Contracts (UTUGCs) for other requirements.

1.2. SUMMARY

1.2.1. This Section provides Project administrative and procedural requirements for Contractor to supplement requirements defined in the UTUGCs.

1.3. DEFINTIONS

1.3.1. Capitalized terms used herein shall have the meanings set forth in the Agreement or the UTUGCs unless expressly defined herein.

1.3.2. *Owner's Project Manager (OPM)* means the individual assigned by Owner to act on Owner's behalf with respect to the day-to-day administration of the Project and the Contract Documents.

1.4. SUBCONTRACTS

1.4.1. Refer to the UTUGCs for requirements not identified in this Section. Contractor shall furnish to Owner a list of all Subcontractors to Owner as subcontracts are executed.

1.4.2. For all Projects enrolled by Owner in the UT System Rolling Owner's Controlled Insurance Program (ROCIP or OCIP), Contractor shall obtain each ROCIP enrolled Subcontractor's written acknowledgement that the Subcontractor is aware that the Project will use an OCIP and that the Subcontractor will participate in the program.

1.5. PREVAILING WAGE RATE

1.5.1. Contractor must comply with all aspects of the UTUGCs. Contractor shall require all workers to complete a "Worker Wage Rate Notification Form" before starting Work on the Project. Contractor shall maintain certified payrolls, for Contractor and all Subcontractors, at the Site throughout construction.

1.5.2. OPM may verify wage rate compliance in the field by interviewing workers, or otherwise. Contractor shall assist OPM with verification of wage rate compliance, including provisions for non-English speaking workers.

1.6. FLOW OF COMMUNICATIONS

1.6.1. Refer to the UTUGCs for requirements not identified in this Section.

1.6.2. Unless Owner expressly agrees otherwise, the Architect/Engineer (A/E) is responsible for document control and general Project administration and is the key contact for written communications. Owner's written instructions to Contractor may be issued through the A/E.

1.6.3. All Subcontractor correspondence shall be routed through Contractor. All written Contractor correspondence shall be directed to the A/E, with simultaneous copies to OPM. The actual parties for this Project will be confirmed at the Pre-Construction Conference.

1.6.4. ODR is the only party authorized to direct changes in the Work. Such direction may be communicated by the ODR through the OPM to Contractor. On behalf of ODR, OPM may issue written and/or oral instructions directly to Contractor.

1.6.4.1. All oral instructions must be issued by OPM, or in her or his presence, and shall be promptly confirmed in writing by Contractor. Any oral instructions or discussions with Subcontractors in the absence of Contractor are not contractual and are not binding on either party.

1.6.5. Per the UTUGCs, A/E may issue clarification and other information not affecting the Contract Sum or Contract Time by means of an A/E's Supplemental Instruction (ASI) form, or similar clarification form, which will be sequentially numbered. Both A/E and Contractor shall maintain a separate ASI register.

1.6.6. All Subcontractor Requests for Information (RFI) shall be submitted by and under cover of Contractor, who is to carefully review and ensure the completeness and appropriateness of the question, sequentially number each, and submit to the A/E with copies to OPM. Contractor and A/E may maintain separate RFI logs.

1.6.7. All Project correspondence shall include The University of Texas MD Anderson Cancer Center (MD Anderson) Project Number and Project Name in the title or reference.

1.6.8. Contractor shall process Application for Payments, Requests for Information, Changes, and Submittals as shown in Owner’s Pre-Construction Brochure.

1.7. CHANGED CONDITIONS

1.7.1. Refer to the UTUGCs for requirements not identified in this Section. If Contractor finds conditions at the Site to be materially different from that indicated in the Contract Documents, Contractor shall notify the A/E and OPM immediately, in writing, and prior to disturbing such conditions.

1.8. PROJECT CHANGES

1.8.1. Refer to the UTUGCs for requirements not identified in this Section 01 31 00.

1.8.2. Upon authorization by Owner, Owner or A/E will prepare and issue all changes to the Contract Documents affecting cost, scope and/or time as a formal Change Order on the standard University of Texas MD Anderson Cancer Center Change Order form. The Change Order may include separate change issues, identified as Change Proposals and field orders.

1.8.3. Contractor shall request a change in the Contract Sum, the Contract Time, or both by submitting a Change Order Request (COR) to Owner and A/E. In each COR, Contractor shall identify the reason for the requested change, the proposed adjustment to the Contract Time, and the proposed adjustment to the Contract Sum.

1.8.4. Owner may initiate a change in the Work via the issuance of a Proposed Change Order (PCO), which may be prepared by A/E and issued to Contractor for pricing. Contractor shall submit pricing to Owner within twenty-one (21) days and pricing shall be indicated on the standard Owner "Change in Work Cost Analysis" (Cost Analysis) form provided in the Pre-Construction Conference Brochure. Contractor may not include a PCO or a COR within a Change Order unless Owner has accepted the Contractor’s response to the PCO or the COR.

1.8.4.1. Contractor shall summarize all costs for each change at each level of Subcontractor and supplier by preparing the "Cost Analysis" form, and shall provide each Subcontractor's cost summary on separate "Cost Analysis" forms as backup.

Additional support documentation from both Contractor and each Subcontractor is encouraged, but such will not replace use of the standard form.

1.8.4.2. When Contractor believes it is entitled to a time extension, Contractor shall so state as part of Contractor's response to the PCO, including a justification for a time extension. Owner may grant time extensions only if a PCO affects the activities on the critical path of an Owner approved Work Progress Schedule; i.e., when the Work impacts Substantial Completion.

1.8.4.3. If Owner and Contractor cannot mutually agree upon a fair and reasonable cost and time settlement, Owner may: 1) Reject the quotation and void the PCO, 2) Issue instructions to Contractor to proceed on a time and material basis for a price to be determined later not to exceed a fixed maximum dollar and time, or 3) Issue a Unilateral Change Order.

1.8.4.4. OPM, acting on behalf of the ODR, may issue field orders directly to Contractor for minor changes to the Work, which can be negotiated in the field. Pricing backup is at the discretion of OPM, but when pricing backup is required for any field order, the pricing backup is to be outlined on the "Cost Analysis" form. When Owner and Contractor have signed the field order, the Work is authorized and the field order may be included in the next Change Order.

1.8.5. Request for payment for Change Order work may be submitted only after the Change Order has been fully executed.

1.9. CLAIMS FOR ADDITIONAL COST

1.9.1. Contractor shall timely and officially certify all claims for additional cost and shall specifically comply with all provisions of the UTUGCs to be considered valid. Contractor can make a claim for additional costs incurred.

1.10. LIQUIDATED DAMAGES

1.10.1. If assessed, Owner may withhold liquidated damages from progress payments beginning with the first payment after the adjusted date achieving Substantial Completion and continuing through any subsequent progress payments until all Work is complete. Owner may assess liquidated damages by deducting the liquidated damages from the Contract Sum or Guaranteed Maximum Price (GMP) Proposal through a unilaterally written deductive Change Order.

1.11. SITE USE ISSUES

1.11.1. Refer to the UTUGCs and to Owner's Special Conditions for site use requirements not identified in this Section. Contractor shall manage, coordinate, and direct the Work from the Site.

1.11.2. Contractor is responsible for actions of the entire workforce whenever the workforce is at the Site, or passing through campus to the Site. Harassment of any kind toward any person will not be tolerated; offending workers will be removed from the Project immediately and permanently.

1.11.3. Contractor shall provide and submit a program plan for worker orientation, identification of workers, and control of access to the Site. Any and all workers on the Project shall participate in this program before beginning Work on the Project. The program plan shall include, as a minimum:

1.11.3.1. An overview of Contractor's plan for instruction of Site rules and regulations to all employees who participate on the Project, including but not limited to safety, restricted use of Owner's facilities, parking, conduct/behavior, dress, sanitary facilities, security, etc.

1.11.3.2. Employee identification badges with a photograph of the employee, the employer, and employee's name. Badges shall be provided for all employees and produced by a system on Site. This identification shall be worn at all times while on the Site. Lack of an authorized identification badge shall be grounds for removal from the Site.

1.11.3.3. A detailed written plan indicating how Contractor proposes to control pedestrian and vehicular traffic into and out of the Site. Contractor shall provide a separate plan for normal working hours, nights, after normal hours, weekends, holidays, etc. This plan may be incorporated into Contractor's staging plan.

1.12. HISTORICALLY UNDERUTILIZED BUSINESS (HUB) PLAN

1.12.1. Refer to the Agreement, the UTUGCs and Owner's Rider 104; Policy on Utilization of Historically Underutilized Businesses, which is included as an Exhibit to the Agreement, for HUB requirements not identified in this Section.

PART 2 - PRODUCTS

2.1 SCHEDULING REQUIREMENTS

2.1.1 Refer to the UTUGCs and Section 01 32 00 – Project Planning and Scheduling for detailed scheduling requirements.

2.2 SHOP DRAWINGS AND SUBMITTALS

2.2.1 Refer to the UTUGCs for requirements not identified in this Section.

2.2.2 Submittal Procedures: Contractor shall transmit each item using Owner's standard format. Contractor shall identify the project by Owner's assigned project number, Contractor, Subcontractor and supplier. Contractor shall identify pertinent drawing sheet and detail number and specification section number as appropriate. Contractor shall transmit submittals to Owner and A/E as determined in the Pre-Construction Conference.

2.2.3 Contractor shall include a Safety Data Sheet (SDS) for any and all materials incorporated into the Project. Contractor shall ensure one (1) copy of the SDS attached to the submittal and one copy is kept in a file of SDS's for all materials at the Site. Contractor shall organize the file by the appropriate technical specification section.

2.2.4 If Owner does not assign a submittal tracking number through Owner's internet-based project management system, Contractor shall assign a tracking number to each submittal following a format to be established at the Pre-Construction Conference. The same tracking number with a numerical or alphabetical suffix will be used to identify re-submittals.

2.2.5 Submittal Product Data: Contractor shall collect and organize manufacturer's product data into a single submittal for each element of construction or system. Contractor shall include printed product data such as manufacturer's installation instructions, compliance with recognized trade association standards and testing agency standards, catalog data sheets, standard color charts, roughing-in diagrams and templates, standard wiring diagrams and performance curves. Where product data must be specially prepared because standard printed data is not suitable for use, Contractor shall submit as Shop Drawings.

2.2.6 Shop Drawings: Contractor shall submit newly prepared information that is drawn to accurate scale. Contractor shall highlight, encircle, or otherwise indicate deviations from the Contract Documents. Contractor shall not reproduce Contract Documents or copy standard information as the basis of Shop Drawings. Standard information prepared without specific reference to the Project is not acceptable as Shop Drawings.

2.2.6.1 Shop Drawings include fabrication and installation drawings, setting diagrams, schedules, patterns, templates and similar drawings. Contractor shall include at least the following information:

2.2.6.1.1 Dimensions.

2.2.6.1.2 Equipment service access area.

2.2.6.1.3 Identification of products and materials included.

2.2.6.1.4 Compliance with specified standards.

2.2.6.1.5 Notation of coordination requirements.

2.2.6.1.6 Notation of dimensions established by field measurement.

2.2.7 The burden of timeliness to complete the submittal process is on Contractor. Contractor shall allow sufficient time within the Work Progress Schedule for the A/E and Owner to review all submittals, including time for all re-submittals on any unaccepted/rejected submittals.

2.2.8 Contractor shall carefully examine all data submitted for approval and shall certify that the data has been carefully reviewed and found to be correct with respect to the Contract Documents.

2.2.8.1 Any deviation from the Contract Documents and the reason for the deviation shall be conspicuously noted on the submittal and the transmittal cover sheet. Contractor's failure to conspicuously note deviations and the reason for the deviation will void any action taken on the submittal.

2.2.8.2 All manufacturer's data contained within the submittal shall have all inapplicable features crossed out or deleted in a manner that will clearly indicate exactly what is to be furnished.

2.2.8.3 Equipment of larger sizes than shown, even though of a specified manufacturer, will not be acceptable unless it can be demonstrated that ample space exists for proper installation, operation, and maintenance.

2.2.8.4 Should the A/E, on initiating A/E's review, find the submittal unstamped or uncertified, non-responsive and/or incomplete, A/E shall return the submittal to Contractor immediately. Such returned documents will not be recognized as having been an official submittal.

2.2.9 Owner will not be responsible for payment of any item that has not been submitted and approved through the established submittal process.

2.2.10 Contractor should anticipate transmitting submittals electronically to Owner and A/E. Owner's internet-based project management system may be used for transmitting submittals; confirm with OPM. Paper hardcopies of submittals may be required; the exact number of paper hardcopies for distribution will be determined at the Pre-Construction Conference. Refer to Section 01 77 00 – Project Close-out Procedures for submission of approved submittals at Project close-out.

2.2.11 Samples: As required by individual Sections of the Specifications, Contractor shall submit full-size, fully fabricated Samples cured and finished as specified and physically identical with the material or product proposed. Samples shall include partial sections of manufactured or fabricated components, cuts or containers of materials, color range sets, and swatches showing color, texture and pattern.

2.2.11.1 Contractor shall mount, display, or package Samples in the manner specified to facilitate review by Owner and A/E. Contractor shall prepare samples to match the A/E's Sample, which shall include at least the following information:

2.2.11.1.1 Generic description of the Sample.

2.2.11.1.2 Sample source.

2.2.11.1.3 Product name or name of manufacturer.

2.2.11.1.4 Compliance with recognized standards.

2.2.11.1.5 Availability and delivery time.

2.2.11.2 Contractor shall submit Samples for review of kind, color, pattern, and texture, for a final check of these characteristics with other elements, and for a comparison of these characteristics between the final submittal and the actual product delivered and installed.

2.2.11.3 When variation in color, pattern, texture or other characteristics are inherent in the material or product represented, Contractor shall submit no less than three (3) multiple units that show approximate limits of the variations.

2.2.12 Refer to individual Technical Specification Sections for additional submittal requirements.

2.3 SUBSTITUTION PROCEDURES

2.3.1 Refer to the UTUGCs for requirements not identified in this Section.

2.3.2 The specified products used in preparing the Contract Documents establish minimum qualities. Substitutions must be at least equal to the minimum qualities for consideration by Owner as an acceptable substitution. The burden of proof of equality rests with Contractor. Owner retains sole authority for acceptance of substitutions.

2.3.3 Contractor shall submit all substitution requests within sixty (60) days of the Notice to Proceed with Construction and shall allow a minimum of twenty-one (21) days for review of each substitution by the A/E and Owner in addition to the requirements identified in Section 2.2 above. Contractor is solely responsible for allowing sufficient time for substitutions to be considered without affecting Contract Time.

2.3.4 Substitution requests shall include the name of the material or equipment for which it is to be substituted and a complete description of the proposed substitution, including drawings, performance and test data, and other information necessary for an evaluation. Documentation for substitution requests shall show compliance with the following, as applicable:

2.3.4.1 Statement indicating why specified product or fabrication or installation cannot be provided,

2.3.4.2 Coordination information, including a list of changes or modifications needed to other parts of the Work that will be necessary to accommodate proposed substitution.

2.3.4.3 Detailed comparison of significant qualities of proposed substitution with those of the Work specified. Include annotated copy of applicable specification section. Significant qualities may include attributes such as performance, weight, size, durability, visual effect, sustainable design characteristics, warranties, and specific features and requirements indicated. Indicate deviations, if any, from the Work specified.

2.3.4.4 Product data, including drawings and descriptions of products and fabrication and installation procedures.

2.3.4.5 Samples, where applicable or requested. Owner may require Contractor to provide Samples of both the specified item and the proposed item for comparison.

2.3.4.6 Certificates and qualification data, where applicable or requested.

2.3.4.7 List of similar installations for completed projects with project names and addresses and names and addresses of architects and owners.

2.3.4.8 Material test reports from a qualified testing agency indicating and interpreting test results for compliance with requirements indicated.

2.3.4.9 Cost information, including a proposal of change, if any, in the Contract Sum.

2.3.4.10 Contractor's certification that proposed substitution complies with requirements in the Contract Documents except as indicated in the substitution request, is compatible with related materials, and is appropriate for applications indicated.

2.3.4.11 Contractor's waiver of rights to additional payment or time that may subsequently become necessary because of failure of proposed substitution to produce indicated results.

2.3.5 Owner may base acceptance of materials and equipment on the supplier and/or manufacturer's published data and may be provisional subject to the submission of complete shop drawings and/or specifications indicating compliance with the Contract Documents. Owner’s acceptance of materials and/or equipment under this provision shall not be construed as authorizing any deviation from the Contract Documents, unless specifically directed in writing from Owner and/or A/E.

2.3.5.1 Contractor shall be solely responsible for all additional costs resulting from the review of any proposed substitution. Additional costs include direct and indirect costs that are not presented at the time of the substitution request and costs that become known after the review and approval of the substitution.

2.3.6 Should Owner accept a proposed substitution and should the substitute prove defective or otherwise unsatisfactory for the service intended within the guarantee period, Contractor shall replace the substitute with the material or equipment specified in the Contract Documents at no additional cost to Owner.

2.4 INITIAL APPLICATION FOR PROGRESS PAYMENT

2.4.1 Refer to the UTUGCs and Section 01 32 00 – Project Planning and Scheduling for requirements not identified in this Section.

2.4.2 Contractor may submit a request for a progress payment once per month. Such request shall be presented on Owner’s Application for Payment and Schedule of Values forms (refer to Attachment No. 1 and No. 2) supplemented by columnar continuation sheets, which represent updates to the original Contract Sum Schedule of Values.

2.4.3 Contractor shall keep Project accounting records on the basis of generally accepted accounting principles in accordance with cost accounting standards issued by the Federal Office of Management and Budget Cost Accounting Standards Board and organized by each Application for Payment period.

2.4.4 Prior to the submission of the first Application for Payment and within twenty-one (21) days of issuance of the Notice to Proceed with Construction, Contractor shall submit the following documents to the A/E, OPM, and Owner's Construction Inspector for review, using Owner's Standard Schedule of Values format.

2.4.4.1 Contract Sum or GMP Schedule of Values: Contractor shall submit a single document itemizing the breakdown of the Contract Sum, including general conditions, contingencies and allowances using Owner's Standard Schedule of Values format. Contractor shall submit a draft breakdown at least twenty-one (21) days prior to submitting the initial Application for Payment and such submittal shall be a condition precedent to the processing of the first payment application. Contractor shall submit subsequent draft copies of the Schedule of Values at least seven (7) days prior to formal submission of each monthly Application for Payment.

2.4.4.1.1 The Schedule of Values breakdown shall follow the trade divisions of the specifications and shall be itemized by submittal, floor, area, elevation or other building systems, as a minimum. The breakdown shall include a labor and material breakdown for each line item and be of such detail as may be required by Owner and/or A/E, but in general shall limit each line item to less than $100,000.

2.4.4.1.2 Commissioning activities shall be identified as a line item on the Schedule of Values in sufficient detail to allow for Owner's monthly review of progress.

2.4.4.1.3 No adjustment to the original detailed breakdown of a Schedule of Values line item shall be made once accepted by Owner and A/E. Once accepted, the breakdown will form the basis for all periodic payments.

2.4.4.1.4 For projects using construction manager-at-risk or design-build delivery, Contractor may adjust the detailed breakdown of a General Conditions Cost line item if the total amount for a General Conditions Cost line item exceeds one hundred percent (100%). A corresponding amount shall be deducted from another General Condition Cost line item(s) or the Construction Phase Fee to pay for the General Conditions Cost line item overage.

2.4.4.1.5 Contractor shall not use Subcontractor invoices/pay applications in lieu of submitting a Schedule of Values.

2.4.4.1.6 The breakdown shall anticipate future Change Orders and make provisions for incorporating all changes into the Schedule of Values listing. If issued, Change Orders shall be identified separately and shall itemize the GMP Change Orders, Change Proposals and/or field orders, which are incorporated into each Change Order for payment on a line-item basis as required by this section.

2.4.4.1.6.1 Payments shall not be made for work contained in unexecuted Change Orders.

2.4.4.1.7 For Projects for which the Contract Sum is developed through the submittal and acceptance of Guaranteed Maximum Price proposals, the process outlined above shall be repeated each time a subcontract is added to the monthly Schedule of Values.

2.4.4.2 Work Progress Schedule: Refer to Section 01 32 00 – Project Planning and Scheduling for all Work Progress Schedule requirements.

2.4.4.3 Submittal Register: Contractor shall provide Owner and A/E with a submittal schedule/register of all items requiring submittal review showing the items' anticipated submission dates and late finish dates for completion of the review process. The submittal schedule/register shall be incorporated with the Work Progress Schedule, and each shall be updated monthly and submitted to the A/E and Owner with each Application for Payment.

2.4.4.4 Equipment Matrix: Section 01 91 00 – General Commissioning Requirements requires a matrix of all operable devices and building system components be submitted to Owner. This matrix may be incorporated into equipment documentation required in Operating and Maintenance Manuals as indicated in Section 01 77 00 – Project Closeout Procedures.

2.4.4.5 Contractor is encouraged to integrate these documents to the extent practical to avoid duplication, both in initial setup and ongoing updates to each.

2.4.5 When Owner and Contractor agree to the Schedule of Values line item amounts, Contractor shall submit two (2) copies of the formal Application for Payment to the A/E, utilizing Owner's form, with original signatures of a duly authorized representative of Contractor and original notarization. Contractor shall furnish a certificate designating a person(s) who has authority to sign pay applications on behalf of Contractor if such is not an officer of the firm.

2.4.5.1 Contractor shall provide attachments to each month's payment request per the UTUGCs. Contractor should verify the number of copies of each attachment with Owner prior to submission.

2.4.5.1.1 Fully executed Application for Payment, which shall provide

2.4.5.1.1.1 Confirmation that Contractor is maintaining and has updated the Record Documents kept at the Site.

2.4.5.1.1.2 Contractor has provided Owner with updates to HUB Progress Assessment Report

2.4.5.1.2 Updated Submittal Schedule/Register.

2.4.5.1.3 Updated Work Progress Schedule.

2.4.5.1.4 Wage rate notification form for each member of the workforce not previously submitted.

2.4.5.1.5 Documentation of partial Release of Liens and Claims in accordance with the value of the monthly Application for Payment.

2.4.6 The formal monthly Application for Payments shall be first certified by the A/E and then submitted to OPM for signature and processing. Contractor may expect receipt of payment within thirty (30) days after OPM receives the formal Application for Payment.

2.5 MONTHLY APPLICATION FOR PROGRESS PAYMENTS

2.5.1 Refer to the UTUGCs and Section 01 77 00 – Project Closeout Procedures, for requirements not identified in this Section.

2.5.2 For regular monthly Applications for Payment, Contractor shall submit for review and approval a draft payment request to OPM and the A/E no less than seven (7) days prior to formal submission. Contractor shall be prepared to review the draft copy with Owner and the A/E. Failure to comply with the requirements outlined in section 2.4 above shall relieve Owner from Owner's obligation to make payments on any and all line items until Contractor meets all requirements.

2.5.2.1 Payments cannot exceed the Contract Sum, work in-place, or subcontract amounts as depicted on Schedule of Values line items.

2.5.2.2 Retainage shall not be used to cover Punchlist items.

2.5.3 Requests for payments in association with release of, or reduction in, retainage or completion of Work have additional requirements as outlined in the UTUGCs and Section 01 77 00 – Project Closeout Procedures.

2.5.4 Contractor's Application for Payment shall not become final and ready for formal submission for payment until the date OPM signs the Application for Payment indicating the Work for which Contractor is requesting payment in the Application for Payment has been reviewed and is acceptable, subject to the limitations set forth in the UTUGCs.

2.6 PROCUREMENT OF SUBCONTRACTS – CMR AND DB AGREEMENTS ONLY

2.6.1 As used below, Contractor is to be interpreted to mean either the Construction Manager (for projects using construction-manager-at-risk delivery) or the Design/Build Contractor (for projects using design-build delivery).

2.6.2 For projects using construction manager-at-risk (CMR) or design-build (DB) delivery Contractor (Construction Manager for CMR delivery or Design/Build Contractor for DB delivery) shall provide a written Procurement Package Strategy (PPS) for procuring subcontracts including self-performance Work (other than General Conditions), prior to the acceptance of the Guaranteed Maximum Price Proposal (GMP Proposal), but no later than twenty (20) days prior to the first solicitation of offers. The PPS shall be a written plan submitted to and reviewed by Owner and the A/E.

2.6.2.1 The plan shall identify procurement packages that are most advantageous to the Project and align with the Contractor's HUB Good Faith Effort by providing at least three (3) qualified respondents (including the Contractor for any Work Contractor is seeking to self-perform). Each procurement package shall include the UTUGCs, Owner's Special Conditions, Owner's Division 01 Specifications, Drawings and Specifications and any other Owner requirements included in the Contract Documents pertaining to the scope of work covered in the packages.

2.6.2.2 The PPS shall conspicuously identify any and all work for which the Contractor intends to submit a bid/offer, but will not perform with Contractor's own forces (i.e. subcontract to someone else if determined to be "best value").

2.6.2.3 The PPS shall include the following for each procurement package contemplated:

2.6.2.3.1 Anticipated scope of work to be procured.

2.6.2.3.2 Anticipated selection criteria and questions.

2.6.2.3.3 Self-perform work proposals to be submitted by Contractor.

2.6.2.3.4 Proposed advertising dates.

2.6.2.3.5 Proposed pre-submittal/HUB/ROCIP meetings.

2.6.2.3.6 Proposed Receipt, review and award dates.

2.6.2.3.7 Anticipated notice to proceed dates.

2.6.2.4 Contractor shall update the PPS monthly as a minimum or whenever conditions change or proposed dates are revised.

2.6.3 The goal of the Project Team shall be to have all work procured through an advertised competitive process, however, if a "minor procurement" condition arises during the process, the following procurement guidelines may be used by Contractor, with Owner approval, for procurement of work:

2.6.3.1	Less than $15,000.00:	No requirements
2.6.3.2	$15,000.01 and up to $50,000.00:	Obtain three (3) informal offers
2.6.3.3	$50,000.00 or more:	Advertised competitive offers

2.6.4 This requirement does not pertain to Change Orders to existing subcontracts.

2.6.5 Work may be divided into reasonable lots; however, material or labor acquired through purchase order/vendor type agreements are subject to the entire Project (e.g. concrete material shall be procured as a unit price times an estimated total project quantity provided by Contractor to equal a total construction cost). Work shall not be incrementally divided for the purpose of circumventing the procurement guidelines.

2.6.6 Contractor may establish selection criteria for each phase of work for review by the Project Team. Criteria shall be qualifications based and consistent with the information needed by Contractor to make a proper evaluation and selection. Contractor shall establish a selection matrix including cost, criteria, weighting and ranking procedures for evaluation. Contractor shall work with the Project Team to tailor the selection criteria to be Project and scope specific, and ensure that the questions are proper and relevant to the goals of the Project. Contractor shall follow the Good Faith Effort (HUB) requirements identified in Owner's Rider 104, *Policy on Utilization of Historically Underutilized Businesses*, which is included as an Exhibit to the Agreement, including attachments to be completed by first tier subcontractors. However, HUB participation/status cannot be used as criteria for determining "best value", only for determining if the respondent is responsive.

2.6.6.1 Contractor shall establish clear criteria and questions so that those reading the Invitation to Bid or the Request for Proposals will understand how they will be evaluated.

2.6.6.2 If criteria are not included in a Request for Proposals, the request shall be considered an Invitation to Bid, and Contractor shall award the subcontract to the responsible, responsive bidder that submits the lowest price offer.

2.6.6.3 After selection criteria have been established, Contractor shall publicly advertise the work in general circulations and trade. This advertisement shall include, at a minimum, the following:

2.6.6.3.1 Owner Project Number and Owner Project Name.

2.6.6.3.2 Contractor name and address.

2.6.6.3.3 Contractor contact name and phone number.

2.6.6.3.4 Location for viewing plans and specifications.

2.6.6.3.5 Date, time and location of Pre-submittal/HUB/ROCIP meeting.

2.6.6.3.6 Date, time deadline(s), and location for receiving proposals.

2.6.6.3.7 Instructions to respondents for submitting offers.

2.6.6.3.8 Selection criteria, questions and submittal requirements.

2.6.6.3.9 Reference to and a copy of Owner's Rider 104, Policy on Utilization of Historically Underutilized Businesses.

2.6.6.3.10 For projects enrolled in The University of Texas System Rolling Owner's Controlled Insurance Program (ROCIP or OCIP),

2.6.6.3.10.1 a copy of Owner's Specification Section 00 73 16, Project Insurance (OCIP),

2.6.6.3.10.2 a copy of Owner's Specification Section 01 35 23, Project Safety (OCIP), and

2.6.6.3.10.3 To ensure compliance with Texas statutory requirements, each offer or bid response form shall include the following language on the signature page; "By signing and submitting this offer, I acknowledge that this project will use an Owner Controlled Insurance Program (OCIP) and I will participate in the program."

2.6.7 At the time and location identified in the advertisement, Contractor shall hold a Pre-submittal/HUB/ROCIP meeting for all prospective respondents with the Project Team and Owner's HUB Coordinator. Contractor shall review as a minimum:

2.6.7.1 The general scope of the Project and the specific scope of work included in the package.

2.6.7.2 Instructions to respondents for submitting offers.

2.6.7.3 Selection criteria and questions.

2.6.7.4 HUB Good Faith Effort requirements.

2.6.7.5 Project Safety requirements.

2.6.7.6 OCIP requirements (if applicable).

2.6.7.7 Work Progress Schedule requirements.

2.6.7.8 Payment procedures and requirements, including retainage.

2.6.7.9 Commissioning and Close-out requirements.

2.6.8 If Contractor identifies any self-performance in the PPS (work to be performed by Contractor's own employees), Contractor shall submit a proposal to Owner at the advertised time and location in a manner so as not to compromise the competitive process.

2.6.8.1 Regardless of the work or method of accepting offers, all Contractor self-performance offers shall be:

2.6.8.1.1 Estimated and submitted by a separate estimating team that is not associated with Contractor's pre-construction and/or construction team;

2.6.8.1.2 Submitted in a sealed envelope;

2.6.8.1.3 The final offer price and not subject to change for any reason prior to recommendation of subcontract award.

2.6.9 Contractor shall accept all responses at the advertised location until the advertised deadline. Upon receipt, OPM will initial the response to indicate the time and date received. Any response received after the deadline shall not be considered by Contractor and shall be returned to the respondent unopened.

2.6.9.1 Fax responses will not be accepted unless Owner, prior to the initial advertisement for offers, approves a detailed plan by Contractor addressing issues related to receipt, care and custody that will ensure the integrity of the competitive procurement process.

2.6.10 After compiling, reviewing and verifying the prices and scope associated with all offers, Contractor shall provide an "offer tabulation" matrix and a proposed Schedule of Values for review by the Project Team.

2.6.10.1 The "offer tabulation" matrix shall compare all equivalent scope proposals to the Contractor's estimate.

2.6.10.2 Each matrix shall indicate Contractor's estimate for each scope of work and identify the respective cost savings/over-runs.

2.6.10.3 Contractor may use values/quantities from Contractor's own estimate to provide full scope comparisons between each respondent, however, these "plug" numbers shall be clearly identified in the matrix to the Project Team and be used only to compare the various offers.

2.6.10.4 The proposed updated Schedule of Values shall summarize all executed and recommended subcontracts to provide a current status of the Guaranteed Maximum Price Proposal.

2.6.10.5 Once the offers are compiled into an "offer tabulation" matrix and the proposed Schedule of Values has been updated, Contractor shall request a meeting with the Project Team to review the offers.

2.6.11 Contractor shall lead the offer review meeting by reviewing the scope of work, the offers received, any exclusions or conditions, identify any non-qualified respondents and any other problems that may have occurred during the process.

2.6.11.1 Contractor shall confirm that the respondents are qualified, meet the established selection criteria (if applicable), and identify the amount of each offer.

2.6.11.2 Contractor shall identify the recommended offer and the current status of the buy-out savings to the Project Team. If the recommend offer causes the Cost of Work line item (including any contingencies) to exceed the amount in the GMP, Contractor shall acknowledge that the overage will be deducted from Contractor's Construction Phase Fee.

2.6.12 Once a recommended respondent has been identified by Contractor, without exception by Owner, Contractor shall finalize negotiations with the recommended respondent.

2.6.12.1 Contractor shall identify and confirm with OPM the “plug” numbers, if any, Contractor intends to use in Contractor’s negotiations. “Plug” numbers may be established through Contractor’s own estimate (if submitted to OPM before the advertised deadline) or values included in other non-selected respondent offers.

2.6.12.2 If Contractor cannot reach an agreement with the selected respondent, Contractor shall notify OPM that Contractor intends to begin negotiations with the second recommended” respondent.

2.6.12.3 Contractor shall issue a letter to Owner indicating that Contractor intends to write a subcontract to the selected respondent (including self-perform work), identifying the following:

2.6.12.3.1 The procurement package number.

2.6.12.3.2 The base price from the selected respondent and any alternates included in the offer.

2.6.12.3.3 The total value of the proposed subcontract with a description of any changes from submittal day values.

2.6.12.3.4 Drawings and/or specifications related to the subcontract.

2.6.12.3.5 Additional scope items added to the subcontract (as previously agreed to by Owner) and their value.

2.6.12.3.6 Current status of the GMP identifying current savings/overages.

2.6.12.3.7 A copy of the offer tabulation matrix.

2.6.12.3.8 A copy of the executed subcontract or purchase order, etc. is required prior to any request for payment by Contractor for applicable work.

2.6.12.4 If Owner objects to the recommended respondent identified by Contractor, Owner may conduct an evaluation of the selection process and/or results.

2.6.12.4.1 If, after evaluation, Owner disagrees with Contractor’s recommendation, Owner may instruct Contractor to either re-solicit the scope of work or use Owner’s preferred selection.

2.6.12.4.2 If the value of Owner’s preferred selection causes Cost of Work line item to exceed the amount in the GMP, the amount of the excess will be the responsibility of Owner.

2.6.12.5 Contractor shall provide one (1) complete copy of all recommendation letters and offers to OPM for record, as they occur until Final Payment.

2.6.13 For additional procurement packages, Contractor shall repeat the steps identified outlined above as many times as identified in the current PPS for the entire Project.

2.7 DAILY REPORT

2.7.1 Contractor shall provide on a daily basis, the A/E and OPM with a report detailing Contractor’s daily activities on the Project using a format acceptable to Owner. All tests that Contractor performs and all work reports required of Subcontractors shall be attached to Contractor’s daily report.

2.7.2 The report shall include, as a minimum, the following information as it relates to the day's activities on the Site:

2.7.2.1 Total number of employees on the Site (including total number of employees for Contractor and each Subcontractor); any change in personnel;

2.7.2.2 Equipment;

2.7.2.3 Areas of work and type of work performed;

2.7.2.4 Material received;

2.7.2.5 Tests performed;

2.7.2.6 Any injuries and/or accidents;

2.7.2.7 Any oral instructions received;

2.7.2.8 Any material damage; and anything else that might impact quality or schedule.

PART 3 – EXECUTION

3.1 PRE-CONSTRUCTION CONFERENCE (WITH OR WITHOUT A PARTNERING WORKSHOP)

3.1.1 Owner may provide a Pre-Construction Brochure, as an overview of administrative procedures for the Project. A review of the brochure, identification of key Project personnel, Owner's sample administrative forms, and other information will be conducted at the Pre-Construction Conference.

3.1.2 Upon mutual agreement, a Partnering Workshop may be held with or near the time of the Pre-Construction Conference. Contractor shall pay for the Pre-Construction Conference and/or Partnering Workshop in total and Owner will reimburse Contractor for fifty percent (50%) of the mutually agreed-upon costs. For projects using construction manager-at-risk or design-build delivery, 100% of the costs will be reimbursed to Contractor as part of the General Conditions Costs.

3.1.2.1 The Pre-Construction Conference and/or Partnering Workshop is intended to provide further understanding among the parties, to establish mutual goals for the Project, and to develop strategies for achieving those goals.

3.1.3 Owner will schedule a Pre-Construction Conference to generally coincide with issuance of Notice to Proceed with Construction. The Pre-Construction Conference agenda will cover broad Project issues followed by detail review of administrative procedures.

3.1.3.1 The UTUGCs requires Contractor to comply with Owner's administrative requirements as outlined herein and as reviewed at the Pre-Construction Conference.

3.1.3.1.1 For Projects using construction manager-at-risk or design-build delivery, Owner may require a Pre-Construction meeting prior to Notice to Proceed with Construction.

3.1.3.1.2 For Projects using construction manager-at-risk or design-build delivery and multiple procurement packages, Owner may schedule additional Pre-Construction Conferences to include any Subcontractors added to the Project after the initial Pre-Construction Conference.

3.1.4 Attendance is required at the conference by all appropriate representatives of Contractor, mechanical, electrical, plumbing Subcontractors, and any additional subcontractors (proposed or engaged), whose scope of work represents five percent (5%) or more of the total construction cost. Contractor shall request all HUB subcontractors also be represented. Each firm is to be represented by personnel directly involved in the Project, including project managers and project superintendents or labor foremen, as a minimum.

3.1.4.1 Project representatives of Contractor and all other parties directly involved with the processing or executing of Project submittals, changes and/or payments should attend the Pre-Construction Conference.

3.1.5 Prior to the scheduled time of the Pre-Construction Conference, Contractor shall provide Owner a written outline of all involved firms, Contractor's key personnel, including mailing address and phone numbers to be incorporated into a Project Directory.

3.2 OWNER'S MONTHLY PROJECT PROGRESS MEETINGS

3.2.1 In addition to specific coordination meetings, pre-installation contractor meetings for each element of Work, and other Project meetings for other purposes, Owner may schedule and conduct a Project Progress Meeting at least once each month with the timing generally coinciding with preparation of payment request and submission of the updated Work Progress Schedule.

3.2.2 Contractor shall coordinate with Contractor's Subcontractors so that each entity then involved in planning, coordination, or performance of Work will be properly represented at each meeting.

3.2.2.1 Prior to the monthly Project Progress Meeting, Contractor shall convene a similar progress meeting with Contractor's Subcontractors to review each of the Subcontractor's present and future needs including interface requirements, utility outages required, sequences, deliveries, access, Site utilization, temporary facilities and services, hours of work, hazards and risks, housekeeping, change orders, and documentation of information for payment requests in order to be fully prepared to discuss all pertinent issues with Owner. Contractor shall notify Owner and A/E in advance of such meetings with subcontractors.

3.2.3 Owner's monthly Project Progress Meetings may include review of Contractor's updated Work Progress Schedule and forecast of operations for the coming period, coordination issues, anticipated utility outages, status of requested change proposals and other cost impact issues, status of the commissioning process, updates to the HUB Progress Assessment Report, and other Project issues.

3.2.4 Contractor and A/E shall provide separate tracking logs for submittals, RFIs, ASIs, and changes in a package for each primary meeting participant. For Projects using design-build delivery, a single set of tracking logs may be utilized if accepted in advance by Owner.

3.2.5 OPM will chair the Project Progress Meetings. Contractor shall be specifically prepared to discuss the following at each Project Progress Meeting:

3.2.5.1 Work Progress Schedule Update Reports as required in Section 01 32 00 – Project Planning and Scheduling.

3.2.5.2 Status of "action" items from the previous Project Progress Meeting.

3.2.5.3 Update on subcontract buyout activities (for projects using construction manager-at-risk or design-build delivery).

3.2.5.4 Current status of product submittals and shop drawings, requests for information (RFI), and A/E's clarifications (ASI).

3.2.5.5 Status of Project changes and other items of significance, which could affect progress.

3.2.5.6 Status of the commissioning process for the Project.

3.2.6 In addition to the monthly Project Progress Meeting, Owner may also schedule bi-monthly, weekly, or other Project meetings at various stages of the Project as conditions may dictate. However, the complete report requirements noted above will apply only to the monthly Project Progress Meetings.

3.3 UTILITY OUTAGES

3.3.1 Contractor shall notify Owner's OPM, in writing, of any planned utility outages in accordance with Owner's Special Conditions.

3.3.2 Owner will provide a standard form for processing a request for utility shutdown or any other campus disruption. Contractor shall utilize this form, Utilities Outage Shutdown Request Form, with attachments as necessary, in requesting an outage. Refer also to Section 00 25 00 - Owner's Special Conditions for Owner's Policy for Planned Utility Outages.

3.3.3 Contractor shall not turn services on or off, without prior written authorization from Owner. Unless Contractor is directed otherwise, Owner will turn services on and off.

3.4 TESTING

3.4.1 Refer to the UTUGCs and Section 01 45 00 – Project Quality Control for additional requirements.

3.4.2 Where specific testing is specified in a technical section of the Specifications or otherwise indicated in the Contract Documents, Contractor shall bear the costs of all tests unless the Contract specifically states that it is to be paid for by Owner.

3.5 INSPECTIONS

3.5.1 Refer to the UTUGCs and Section 01 45 00 – Project Quality Control for inspection requirements not identified in this Section.

3.5.2 Contractor shall provide sufficient, safe and proper facilities at all reasonable times for observation and/or inspection of the Work by Owner and Owner's consultants. This shall include any and all equipment necessary for access to various aspects of the Work.

3.6 ONE-YEAR WARRANTY

3.6.1 Refer to the UTUGCs for warranty requirements not identified herein.

3.6.2 If informed of a defect, Contractor shall remedy the defect at Contractor's own cost and respond in writing to OPM and the notifying party within ten (10) days indicating the action taken to resolve the defect.

3.6.3 Contractor shall attend any and all meetings to resolve warranty issues. Contractor will provide a tracking log of all warranty issues and Contractor's resolution.

3.6.4 Contractor shall participate in an end-of-warranty Project review with Owner, as scheduled by OPM, at a time prior to termination of the warranty period.

3.6.5 Unless directed otherwise in writing by Owner, all warranties shall use the date of Substantial Completion as the start date for that particular warranty.

3.6.5.1 If any equipment and/or system is placed into continuous service prior to the date of Substantial Completion, Contractor shall provide, at Contractor's own cost, for the necessary warranty extension.

3.6.5.2 Contractor shall deliver all equipment to Owner in an "as-new" condition. If equipment is put into service for the convenience of Contractor, Contractor shall, at Contractor's own expense, maintain, service and refurbish the equipment to "as-new" condition prior to delivery to Owner.

3.6.6 Provisions described herein shall also apply to those items having warranties greater than one-year.

END OF SECTION 01 31 00

Attachment No. 1 – Application for Payment Example

Attachment No. 2 – Schedule of Values Example

☐Yes ☐No

THE UNIVERSITY OF TEXAS
M.D. ANDERSON CANCER CENTER

APPLICATION FOR PAYMENT - CONSTRUCTION MANAGER AT RISK

APPLICATION FOR PARTIAL PAYMENT No. {ENTER No.} PROJECT No. {ENTER No.}

FOR THE PERIOD: {ENTER BEGINNING DATE} TO: {ENTER ENDING DATE} INCLUSIVE.

NAME OF PROJECT: {ENTER PROJECT NAME}

CM-R NAME & ADDRESS: {ENTER CM-R NAME & ADDRESS}

TO BE COMPLETED BY THE CONSTRUCTION MANAGER AT RISK

		PRE-CONSTRUCTION SERVICES	+	CONSTRUCTION SERVICES (GMP)	=	TOTAL CONTRACT AMOUNT
1	Original Contract Amount:	$ 0		$ 0		$ 0
2	Approved Change Order Extras:	$ 0		$ 0		$ 0
3	Accepted Change Order Deductions:	$ 0		$ 0		$ 0
4	Current Contract Amount:	$ 0		$ 0		$ 0
5	Total Completed To Date:	$ 0		$ 0		$ 0
6	Less Total Retainage Held To Date:	N/A		$ 0		$ 0
7	Total Net Earned Amount:	$ 0		$ 0		$ 0
8	Less Previous Payments:	$ 0		$ 0		$ 0
9	*Current Payment Due For Each Part:*	$ *0*		$ *0*		$ *0*
10	Balance To Finish, Including Retainage: *(line 4 less line 7)*	$ 0		$ 0		$ 0

AFFIDAVIT

Insurance: I, agent for the Construction Manager-at-Risk, do hereby certify that all insurances as required by law, and by the specifications, are in full force and effect as of this date.

Claims & Liability: I, agent for the Construction Manager-at-Risk, do furthermore certify that all current invoices and obligations have been paid in full, and there are no claims or liabilities against this contract.

_____
Signature of CM-R

Example

CONSTRUCTION MANAGER AT RISK'S NOTARIZED SIGNATURE

STATE OF TEXAS
COUNTY OF
_____
(STAMP SEAL BELOW)

Personally before me, the undersigned authority, this day appeared ....., {PRINTED NAME OF CM-R AGENT} who being by me duly sworn, on his oath says that the account hereto attached, in the amount of ....., {ENTER AMOUNT} ..... in favor of {PRINTED NAME OF CONTRACTOR/FIRM} against The Board of Regents of the University of Texas System and M.D. Anderson Cancer Center, is, within the knowledge of affiant, just true, and correct that it is due and that all just and lawful offsets, payments, and credits have been allowed.

Sworn to and subscribed before me, ... {CONTRACTOR SIGNATURE} ..... this _____ day of _____, 20 _____.
Signature of CONTRACTOR

Notary Public {NOTARY SIGNATURE} {ENTER NAME OF COUNTY} County, Texas
Signature of Notary

CONSTRUCTION SERVICES CERTIFICATE: TO BE COMPLETED BY THE PROJECT ARCHITECT/ENGINEER

TO THE BOARD OF REGENTS OF THE UNIVERSITY OF TEXAS SYSTEM, AUSTIN, TEXAS and the M.D. Anderson Cancer Center, Houston Texas

This is to certify that _____ ....., Construction Manager-at-Risk

for the Project ..... _____ ..... is entitled to payment

for Construction Services of this Certificate in the amount of ..... $ _____

Architect/Engineer ..... _____

Reviewed and Approved on ..... _____ By: _____
Date *Signature of A/E*

PRE-CONSTRUCTION SERVICES : TO BE COMPLETED BY THE UTMDACC PROJECT MANAGER

Current Payment For Pre-Construction Services ..... $ _____

Reviewed and Approved on ..... _____ By: _____
Date *Signature of PM*

CONSTRUCTION SERVICES : TO BE COMPLETED BY THE UTMDACC PROJECT MANAGER

CM-at-Risk has submitted an updated Project Schedule:

CM-at-Risk has updated the Record Drawings:

This Pay Application includes a current Release of Retainage:

if "Yes", CM-at-Risk has included a "Consent of Surety":

Current Payment For Construction Services ..... $ _____

Reviewed and Approved on ..... _____ By: _____
Date *Signature of PM*

Attachment No. 2 – Schedule of Values Example

(Obtain an Electronic Version of This Form From Owner's Project Manager)

The U.T.M.D.A.C.C. Schedule of Values - Contractor's Estimate Continuation Sheet (8 1/2" x 11" Sheet ONLY)

Project No.:	Project Address:
Project Name:	Application For Payment Number:
Costruction Manager Name:	Application Period: From To

A	B	C		D	E	F	G	H	I	J	K	L	M	N
Spec. Section / Bid Package	Description of Work / Subcontractor / Supplier / Vendor / Specification Section	Initial Proposed Line Item Values	Additional Services / GMP Change Order Values	Actual Subcontract Amount at Buyout	Delta (Proposed to Actual)	Subcontract, Purchase Order or Vendor No.	Detailed Breakdown of Contract Line Items	Total Amount Previously Requested & Percent		Current Application: Total Amount This Period & Percent		Current Application: Total Amount Completed To Date & Percent		Retainage (5%)
Column Equations				C'	C - D		D'	L'	H / G	L - H	J / G	H + J	L / G	L x 5%
Pre-Construction Services														
Programming (20% If Applicable)		$ -	$ -	$ -	$ -	N/A	$ -	$ -	0%	$ -	0%	$ -	0%	N/A
Schematic Design (20%)		$ -	$ -	$ -	$ -		$ -	$ -	0%	$ -	0%	$ -	0%	
Design Development (20%)		$ -	$ -	$ -	$ -		$ -	$ -	0%	$ -	0%	$ -	0%	
GMP Development (10%)		$ -	$ -	$ -	$ -		$ -	$ -	0%	$ -	0%	$ -	0%	
Construction Documents (20%)		$ -	$ -	$ -	$ -		$ -	$ -	0%	$ -	0%	$ -	0%	
Bidding/Proposals (10%)		$ -	$ -	$ -	$ -		$ -	$ -	0%	$ -	0%	$ -	0%	
Additional Services		$ -	$ -	$ -	$ -		$ -	$ -	0%	$ -	0%	$ -	0%	
Pre-Construction Services Subtotal		$ -	$ -	$ -	$ -		$ -	$ -	0%	$ -	0%	$ -	0%	
Construction Services														
General Conditions														
On-Site Project Management Staff														
Project Scheduler		$ -	$ -	$ -	$ -	N/A	$ -	$ -	0%	$ -	0%	$ -	0%	$ -
Project Executive		$ -	$ -	$ -	$ -	N/A	$ -	$ -	0%	$ -	0%	$ -	0%	$ -
Superintendent(s)		$ -	$ -	$ -	$ -	N/A	$ -	$ -	0%	$ -	0%	$ -	0%	$ -
Office Engineer(s)		$ -	$ -	$ -	$ -	N/A	$ -	$ -	0%	$ -	0%	$ -	0%	$ -
Project Manager(s)		$ -	$ -	$ -	$ -	N/A	$ -	$ -	0%	$ -	0%	$ -	0%	$ -
Project Expeditor(s)		$ -	$ -	$ -	$ -	N/A	$ -	$ -	0%	$ -	0%	$ -	0%	$ -
Project Support Staff		$ -	$ -	$ -	$ -	N/A	$ -	$ -	0%	$ -	0%	$ -	0%	$ -
Assistant Superintendent(s)		$ -	$ -	$ -	$ -	N/A	$ -	$ -	0%	$ -	0%	$ -	0%	$ -
Safety Coordinator/Assistant(s)		$ -	$ -	$ -	$ -	N/A	$ -	$ -	0%	$ -	0%	$ -	0%	$ -
Out-of-State Project Specific Travel*		$ -	$ -	$ -	$ -	N/A	$ -	$ -	0%	$ -	0%	$ -	0%	$ -
Bonds and Insurance														
Builder's Risk Insurance		$ -	$ -	$ -	$ -	N/A	$ -	$ -	0%	$ -	0%	$ -	0%	$ -
General Liability Insurance		$ -	$ -	$ -	$ -	N/A	$ -	$ -	0%	$ -	0%	$ -	0%	$ -
Payment and Performance Bonds		$ -	$ -	$ -	$ -	N/A	$ -	$ -	0%	$ -	0%	$ -	0%	$ -
Other Project Insurance as Required by Contract		$ -	$ -	$ -	$ -	N/A	$ -	$ -	0%	$ -	0%	$ -	0%	$ -
Temporary Project Utilities														
Dumpsters		$ -	$ -	$ -	$ -	N/A	$ -	$ -	0%	$ -	0%	$ -	0%	$ -
Project Water		$ -	$ -	$ -	$ -	N/A	$ -	$ -	0%	$ -	0%	$ -	0%	$ -
Project Electricity		$ -	$ -	$ -	$ -	N/A	$ -	$ -	0%	$ -	0%	$ -	0%	$ -
Temporary Toilets		$ -	$ -	$ -	$ -	N/A	$ -	$ -	0%	$ -	0%	$ -	0%	$ -
Monthly Telephone / Internet Service		$ -	$ -	$ -	$ -	N/A	$ -	$ -	0%	$ -	0%	$ -	0%	$ -
Temporary Fire Protection		$ -	$ -	$ -	$ -	N/A	$ -	$ -	0%	$ -	0%	$ -	0%	$ -
Street Rental and Barricades		$ -	$ -	$ -	$ -	N/A	$ -	$ -	0%	$ -	0%	$ -	0%	$ -
Telephone / Internet System Installation		$ -	$ -	$ -	$ -	N/A	$ -	$ -	0%	$ -	0%	$ -	0%	$ -
Fencing and Covered Walkways		$ -	$ -	$ -	$ -	N/A	$ -	$ -	0%	$ -	0%	$ -	0%	$ -
Temporary Water Distribution and Meters		$ -	$ -	$ -	$ -	N/A	$ -	$ -	0%	$ -	0%	$ -	0%	$ -
Temporary Electrical Distribution and Meters		$ -	$ -	$ -	$ -	N/A	$ -	$ -	0%	$ -	0%	$ -	0%	$ -
Site Erosion Control (BMP) and Project Entrance(s)		$ -	$ -	$ -	$ -	N/A	$ -	$ -	0%	$ -	0%	$ -	0%	$ -
Field Offices & Office Supplies														
Partnering Costs		$ -	$ -	$ -	$ -	N/A	$ -	$ -	0%	$ -	0%	$ -	0%	$ -
First Aid Supplies		$ -	$ -	$ -	$ -	N/A	$ -	$ -	0%	$ -	0%	$ -	0%	$ -
Job Photos/Videos		$ -	$ -	$ -	$ -	N/A	$ -	$ -	0%	$ -	0%	$ -	0%	$ -
Reproduction Services		$ -	$ -	$ -	$ -	N/A	$ -	$ -	0%	$ -	0%	$ -	0%	$ -

Example

SECTION 01 32 00 - PROJECT PLANNING AND SCHEDULING

PART 1 - GENERAL

1.1. RELATED DOCUMENTS

1.1.1. The Contractor's attention is specifically directed, but not limited, to the Uniform General Conditions for University of Texas System Building Construction Contracts (UGC) for other requirements.

1.2. SUMMARY

1.2.1 **Time is an essential part of this Contract. Therefore the timely and successful completion of the Work requires careful planning and scheduling of all activities inherent in the completion of the Project.**

1.2.2 Contractor must develop the Project Schedule to allow for a minimum amount of Float for the Project during Pre-Construction and/or Construction Services. Contractor must format the Project Schedule in a manner that facilitates reporting of progress and trends, identification of all critical paths, identification of each activity's predecessor(s) and successor(s), risks and opportunities, projection of upcoming activities, and forecasting of Project milestones.

1.2.3 The Owner must be able to reasonably rely on the Contractor's Project Schedule for projected activity dates in order to make accurate commitments to design professionals, contractors, vendors, user group(s), campus administration, and other parties as necessary.

1.2.4 **Owner's acceptance of the Project Schedule and any subsequent update of the Project Schedule are acceptance of the format and extent of detail of the Project Schedule only. Owner's acceptance does not indicate approval of the Contractor's means or methods, or of any change to the contract terms including, without limitation, any required contract Milestone Activities.**

1.2.5 This Specification applies to all Project delivery methods, regardless of contract type, whether the contracting firm, referred to as the Contractor, is a General Contractor, Construction Manager-at-Risk (CM-R), or Design/Build (DB) Contractor.

1.2.5.1 All references to Pre-Construction Services in this Specification shall apply to requirements for CM-R and DB contract types <u>only</u>.

1.3. DEFINITIONS

1.3.1. The term "Project Schedule", as used throughout the Contract Documents, shall refer to the schedule for the Project as developed, monitored, and maintained, by the Contractor's Project Scheduler, and as used by the Project Team during Pre-Construction and/or Construction Services.

1.3.2. The term "Project Team", as used throughout the Contract Documents, shall refer to the Owner, Architect, Design Consultants, Engineer, User, Contractor, Owner's Service Providers, and Subcontractors (as applicable) that are contracted and/or specifically assigned to the Project.

1.3.3. The term "Owner's Planning and Scheduling Specialist", as used throughout the Contract Documents, shall refer to the Owner's scheduling specialist representative, with all correspondence to be addressed to:

MD Anderson Cancer Center
Facilities Planning, Design and Construction, Mail Box 703
1515 Holcombe Boulevard, Suite 1010

Houston, Texas 77030

1.3.4. The term “Data Date”, as used throughout the Contract Documents, shall refer to the date of the Project Schedule update.

1.3.5. The term “Total Float” (Float), as used throughout the Contract Documents, shall refer to the number of calendar days an activity on the Longest Path can be delayed without delaying the Substantial Completion date.

1.3.5.1. Negative Float indicates that the Project is late, while Positive Float is the property of the Project and does not belong to any one party (Refer to the UGC).

1.3.6. The term “Longest Path”, as used throughout the Contract Documents, shall refer to the sequence of activities that determines the longest duration for the Project when the Float is greater than zero.

1.3.6.1. The term “Critical Path”, as used throughout the Contract Documents, shall refer to the sequence of activities that determines the longest duration for the Project when the Float is equal to or less than zero.

1.4. CONTRACTOR RESPONSIBILITY

1.4.1. The Contractor is responsible for planning, management, coordination, and scheduling of all activities from a Notice to Proceed for Pre-Construction and Construction to Final Completion of the Project within the time allotted by the Agreement.

1.4.2. The Contractor is responsible for keeping the Owner and the Project Team fully informed of schedule status and upcoming activities throughout the Project via the Project Schedule.

1.4.3. The Contractor is solely responsible for the schedule and status of all activities related to Pre-Construction, procurement of materials and subcontractors, construction, testing, inspection, commissioning, and Project turnover to the Owner. The Contractor shall integrate the schedule and status of Owner furnished services such as test, adjust, and balance. Contractor shall schedule completion of activities and proactively submit for Owner’s review and approval, all documentation related to commissioning, including, but not limited to, the following. (Refer to Section 01 91 00 – Project Commissioning and Section 01 77 00 – Project Closeout Procedures for additional requirements.)

1.4.3.1. Commissioning Plan.

1.4.3.2. Equipment Matrix.

1.4.3.3. Submittal Schedule.

1.4.3.4 Format, content, and tab structure for Operating and Maintenance Manuals and submittal of binders.

1.4.3.5. Request for Start-Up/Functional Performance Test Form.

1.4.3.6. Prefunctional Checklists.

1.4.3.7. Functional Performance Test Procedures.

1.4.3.8. Integrated System Test Procedures.

1.4.3.9 Additional Commissioning and Closeout Manual documentation.

1.4.4. The Contractor shall provide adequate and reasonable Project planning in sufficient detail throughout all Project phases, as applicable for all aspects of Contractor's Work, to ensure completion of all activities within the Contract Time.

1.4.5. The Contractor's Pre-Construction and Construction project management personnel shall actively participate in the planning and development of the Project Schedule and shall be prepared to review such development and progress with the Owner, Architect/Engineer, and any other members of the Project Team so that the planned sequences and procedures are clearly understood by all parties.

1.4.6. The Contractor shall plan for appropriate activity durations to allow for thorough review, procurement, submittal, installation, inspection, testing, and commissioning, of all Work and/or systems in order to confirm Contract compliance, including Work relying on Owner participation or coordination.

PART 2 – PRODUCTS

2.1 QUALIFICATIONS OF THE PROJECT SCHEDULER

2.1.1 The Contractor shall assign a Project Scheduler who shall be responsible for the Project Schedule throughout Pre-Construction and Construction Services.

2.1.2 The Contractor's Project Scheduler shall have at least an undergraduate degree in a construction related field, and continuous experience on similar size and type of project(s) within the past five (5) years, including at least two (2) years with the specified scheduling software.

2.1.2.1 In lieu of a degree, the Contractor's Project Scheduler may have at least five (5) years continuous experience on similar size and type of project(s) with the specified scheduling software.

2.1.3 The Contractor's Project Scheduler shall be an integral part of the Project Team during Pre-Construction Services and shall be on-site full-time for Construction Services until at least Substantial Completion of the Work.

2.1.3.1 The Contractor's Project Scheduler may have additional responsibilities such as Senior Project Manager, Project Manager, Superintendent, Assistant Project Manager, Assistant Superintendent, Project Engineer, etc.

2.1.3.2 If the Contractor's Project Scheduler is outsourced, the Contractor shall assign an on-site contact for all Project Schedule related issues.

2.1.4 All Contractor personnel involved in the preparation, updating, and reporting of the Project Schedule shall possess adequate construction scheduling knowledge related to the Project, Critical Path Method (CPM) knowledge, and a general understanding of the specified software.

2.2 REQUIRED SCHEDULING SOFTWARE

2.2.1 Regardless of Project size or type, Contractor shall develop and maintain the Project Schedule using the latest version of Microsoft Project available as of the effective date of the Contract.

2.3 NAMING THE PROJECT SCHEDULE

2.3.1 The Contractor shall title the initial Owner approved Project Schedule, the Baseline Project Schedule: BPS1. Contractor may not "reset" the Baseline Project Schedule unless the Owner approves the reset.

2.3.1.1 If the Owner approves the Contractor's request to "reset" the Baseline Project Schedule, the new Baseline Project Schedule shall be titled sequentially (i.e. BPS1, BPS2, BPS3, etc.).

2.3.2 Subsequent updates to the Baseline Project Schedule shall be named by the last two (2) digits of the year and the month (Example: a March 2004 Baseline Project Schedule title would be "BPS2-0403").

2.4 PROJECT SCHEDULE DEVELOPMENT REQUIREMENTS

2.4.1 The Contractor shall assign a standard "Activity Code" using a custom field, to every activity or task; organized by at least the Project phase, stage, location, building, floor, area, elevation, or system, etc., (i.e. work breakdown structure) including the following primary Activity Codes:

Activity Code & Description	
CP	Contract Procurement
PP	Programming/Pre-Project Planning
SD	Schematic Design
DD	Design Development
CD	Construction Documents
BOR	U.T. System Board of Regents
GMP	Guaranteed Maximum Price
TH	THECB Approval
SP	Subcontractor Bidding / Procurement

Activity Code & Description	
C	Construction
GC	General Conditions
SU	Submittals
FD	Fabricate and Delivery
CI	Contractor Inspections
OI	Owner Inspections
Cx	Commissioning
TAB	Test, Adjust, and Balance
OP	Owner Provided - Contractor Installed

2.4.2 The Contractor shall assign a standard "Resource Code" to every Contractor, Subcontractor, Supplier, Fabricator, Installer, Design Consultant, Owner, and any other party responsible for the accomplishment of an activity, including, but not limited to, the following primary Resource Codes (as applicable):

Resource Code & Description	
A/E	Architect / Engineer
Carp	Carpet
Casf	Casework Fabricator
Casi	Casework Installer
Cocw	Concrete Formwork
Conf	Concrete Finishing
Ctil	Ceiling / Acoustical Tile
Door	Doors & Frames
Dryw	Drywall / Light Gauge Stud Installer
Elec	Electrical
Elev	Elevator
Falm	Fire Alarm Systems
Fire	Fire Protection Systems
Ftil	Floor Tile
Furn	Furnishings
Glas	Glass / Glazing

Resource Code & Description	
Omat	Owner's Material Testing Firm
Otab	Owner's Air Testing & Balance Firm
Ownr	Owner
Pain	Paint & Wall Coverings
Pier	Piers / Piles / Caissons
Plas	Plaster / EIFS
Plum	Plum
Rebf	Reinforcing Steel Fabricator
Rebi	Reinforcing Steel Installer
Roof	Roofing
Sign	Signs
Site	Sitework
Stee	Steel Erector
Stef	Steel Fabricator
Mstf	Miscellaneous Steel Fabricator
Msti	Miscellaneous Steel Installer

Resource Code & Description	
Hard	Hardware
Hvac	HVAC
Insu	Insulator
Irri	Irrigation & Landscaping
Labc	Laboratory Casework Fabricator
Labi	Laboratory Casework Installer
Lbeq	Laboratory Equipment
Masn	Masonry

Resource Code & Description	
Stut	Site Utilities
Tele	Telephone / Communication Systems
Terz	Terrazzo
Toia	Toilet Accessories
Toip	Toilet Partitions
Watp	Waterproofing / Damp proofing
Wodf	Wood Framer
Wods	Wood Framing Supplier

2.4.2.1 The Contractor shall use additional Owner approved Resource Codes, as applicable.

2.4.3 The Contractor shall use additional Secondary Task and Resource Codes, as necessary, to monitor, provide status, and report the Project Schedule.

2.4.4 The Contractor shall assign a unique ”Work Breakdown Structure” (WBS Code) and ”Task Name” to <u>every</u> activity. The WBS Code and Task Name must be meaningful, easily understandable by the Project Team, similar to like activities at differing locations, and as shown on the Contractor’s Schedule of Values.

2.4.4.1 A Task Name shall start with a verb to indicate what is to be done and shall end with a location (Example: Install metal studs - 3rd floor Bldg B).

2.4.4.2 A “Milestone” Task shall refer to any major event or phase, or any other important point in the Project, including the following Tasks:

Milestone Task & Description	Milestone Task & Description
• NTP for Pre-Construction Services	• Authorize Architect/Engineer Start
• Authorize Architect/Engineer Start	• Submit for Owner Review(s)
• Submit for Owner Review	• Joint Review(s) for Owner Comments
• Joint Review for Owner Comments	• Approve Construction Documents
• Approve Schematic Design	• NTP for Construction Services
• Authorize Architect/Engineer Start	• Partnering/Preconstruction Meeting
• Submit for Owner Review	• Establish Site Controls /Mobilize
• Joint Review for Owner Comments	• Complete Primary Foundations
• Approve Design Development	• Structural Top-Out
• FPCC Meeting Deadline	• Building Dry-In
• BOR Approval	• Systems Commissioning
• Submit Construction Application	• Substantial Completion
• Approve Construction Application	• Final Completion
• Submit GMP	• Operational Occupancy
• Approve GMP	

2.4.4.3 A “Detailed” Task shall refer to a single Work event in the Project. The following table contains examples of Detailed Tasks for scheduling:

Detailed Task - Example

- Site Mobilization

Material Approval/Procurement

- Door Frames Shop Drawings
- Contractor/A/E review
- Fabrication
- Door Frame Delivery
- Light Fixtures Submittal
- Contractor/Architect/Engineer Review
- Fabrication
- Light Fixture Delivery
- Sprinkler Shop Drawings/Calculations
- Contractor/Architect/Engineer Review
- Fabrication
- Initial Equipment Delivery
- Millwork Shop Drawings/Laminate Samples
- Contractor/Architect/Engineer Review
- Fabrication
- Initial Millwork Delivery

Construction

- Layout/Top Track
- MEP/Sprinkler Overhead Rough-In
- Door Frames/Wall Framing
- MEP In-Wall Rough-In
- In-Wall Inspection
- Corrections
- Cover Walls
- Tape and Float
- Frame Ceilings
- Furr-Downs/Recessed Light Coves
- Furr Down/Ceiling Drywall Cover
- Ceramic Tile
- Plumbing Fixtures - Toilet Rooms
- Prime/One-Coat Paint

Detailed Task - Example

- Toilet Partitions
- Ceiling Grid
- Curtaintrack Blocking
- Light Fixtures/Grilles/Sprinkler Drops/Smoke Detectors
- Overhead Inspections
- Overhead Corrections
- Ceiling Cover
- Light Coves
- Sheet Vinyl Flooring
- Millwork
- Cast Plastic
- Toilet Accessories
- Dark Room Equipment
- Plumbing Fixtures - Millwork
- Doors
- Hardware
- Glass & Glazing/Blinds
- Curtaintrack
- Biosafety Cabinets/Fume Hoods
- Darkroom Equipment
- Lockers
- Final Paint Coat/Wallcovering
- MEP Trim
- Film Illuminators
- TV Support Brackets
- Appliances
- Carpet Flooring
- Resilient Base
- Wall Protection
- Final Clean
- Pre-Final Inspections
- TAB
- Start-up and Testing
- Corrections

2.4.4.4 A “Summary” Task (i.e. Hammock) shall refer to a grouping (or a summary) of Milestone and/or Detailed Tasks in the Project Schedule.

2.5 PROJECT SCHEDULING METHOD REQUIREMENTS

2.5.1 “Retained Logic” is the required mode of Project Schedule processing.

2.5.2 The estimated Activity Duration of an activity shall be expressed in calendar days.

2.5.2.1 During Pre-Construction Services and Construction Services, the Project Team shall determine the maximum duration for any activity.

2.5.2.2 During Construction, the minimum duration for any Owner milestone inspection activity (i.e. concealed space, above ceiling, substantial and final completion) shall be at least three (3) work days per inspection and re-inspection, or as approved by the Project Team.

2.5.2.3 Estimated remaining Activity Durations shall be stated in work days, as of the Data Date of every Project Schedule update.

2.5.3 Except for the Notice to Proceed for Construction (Preconstruction for CM-R and DB contracts) and the Final Completion Date Milestone, activities shall not have “open ends”.

2.6 PROJECT SCHEDULE ANALYSIS REQUIREMENTS

2.6.1 The Contractor shall use the CPM technique to determine the overall Project duration through the analysis of the durations of each of the activities, their schedule dependencies, and their resultant Float.

2.6.2 For CM-R and DB contracts, the Project Schedule shall include at least **20%** Float from the Notice To Proceed for Pre-Construction Services to the Substantial Completion date.

2.6.3 The Project Schedule shall include at least **10%** Float from the Notice To Proceed for Construction Services to the Substantial Completion date as identified by the Owner in the Notice To Proceed.

2.6.4 Float shall be shown as an activity within the Project Schedule. It should be the last activity prior to the Substantial Completion date Milestone.

2.7 COORDINATION WITH OTHER DOCUMENTS AND WORK

2.7.1 The Contractor shall coordinate the Project Schedule with the Contractor’s Submittal Schedule and Schedule of Values, as required by the UGC and Section 01 31 00 - Project Administration (i.e. the Work breakdown structure shall be arranged, numbered, and described consistently across the various documents).

2.7.1.1 Cost and/or resource loading of the Project Schedule are allowed.

2.7.1.1.1 If the Contractor elects to cost-load the Project Schedule, the Contractor shall provide a separate Schedule of Values in the format required by the Owner in Section 01 31 00 - Project Administration.

PART 3 – EXECUTION

3.1 PLANNING AND SCHEDULING WORKSHOP

3.1.1 Within thirty (30) calendar days after a Notice To Proceed, the Contractor shall schedule and conduct a Planning and Scheduling Workshop with at least the Contractor’s Project Scheduler, Project Manager, Superintendent, the Owner’s Project Manager and Owner’s Planning and Scheduling Specialist (if applicable), the Architect/Engineer, Owner’s representatives, and any available Subcontractors prior to submitting the Project Schedule to the Owner.

3.1.1.1 The Contractor shall schedule and coordinate the workshop with the Owner at least ten (10) calendar days prior to the Planning and Scheduling Workshop. The Contractor shall submit a complete draft Project Schedule to the Owner at least five (5) calendar days prior to the Planning and Scheduling Workshop.

3.1.1.2 The Contractor shall review the draft Project Schedule with the Project Team, including a verbal description of the logic and sequencing of activities, method for determining estimated Activity Durations and corresponding resources required, and any activities involving Owner participation and/or approval.

3.1.2 For CM-R and DB projects, Contractor shall schedule and conduct at least two (2) Planning and Scheduling Workshops. The first shall be within thirty (30) calendar days after a Notice to Proceed with Pre-Construction Services and the second shall be within thirty (30) calendar days after a Notice to Proceed with Construction Services for each "major" Guaranteed Maximum Price (GMP) Proposal executed.

3.1.3 Contractor's attendance at the Planning and Scheduling Workshop(s) and Owner's acceptance of the Baseline Project Schedule is a condition precedent to the Contractor submitting initial and any subsequent progress payments.

3.2 BASELINE PROJECT SCHEDULE SUBMITTAL

3.2.1 The Baseline Project Schedule shall be submitted to the Owner <u>with the required Float</u> within sixty (60) calendar days from the effective date of the Notice To Proceed for Pre-Construction and/or Construction Services (or as approved by the Owner in the Project Planning Scheduling Workshop).

3.2.1.1 A Baseline Project Schedule that does not have at least the minimum amount of Float at submission will result in the Contractor forfeiting all claims to Project Schedule extensions and/or delays as a result of Contract changes and/or excusable delays as described in the UGC.

3.2.1.1.1 If conditions arise prior to submission of the Baseline Project Schedule that are <u>beyond the Contractor's control</u>, the Contractor shall include an Executive Summary with the Baseline Project Schedule to justify the reduction in Float.

3.2.1.2 For CM-R and DB projects, the Baseline Project Schedule shall include identified Milestone and/or Summary Tasks for the remaining Work that has not been approved in an executed GMP Proposal for Construction Services.

3.2.1.2.1 When the Owner has approved the "full" scope of the Project (i.e. the last GMP Change Order has been executed), the Contractor shall coordinate with the Owner to "reset" the Baseline Project Schedule.

3.2.2 The Contractor shall submit one (1) electronic copy of the entire Baseline Project Schedule and one (1) paper copy of the following Baseline Project Schedule reports to the Owner within ten (10) calendar days when the "full" scope of the Project as been approved:

3.2.2.1 <u>Graphic Time-Scaled Report or Gantt Chart</u>: A graphic time-scaled view including all activities, early start and finish dates, estimated durations and Float sorted by Activity Code.

3.2.2.2 <u>Milestone Activity Report</u>: A listing of every Milestone Task and critical path sorted by early start date.

3.2.2.3 <u>Detailed Activity Report</u>: A listing of every Detailed Task sorted by early start date including a fully completed predecessor and successor column.

3.2.3 When the Owner has approved the initial Project Schedule, it shall be referred to as the Baseline Project Schedule, and shall be used for all future Project Schedule updates and reports as "BPS1."

3.2.3.1 For CM-R and DB projects, the Project Schedule shall include Milestone and Summary Tasks until thirty (30) calendar days prior to the submittal of a GMP Proposal for Construction Services. The Project Schedule shall also include Detailed Tasks for at least the first ninety (90) calendar days of Construction Services when submitted with the GMP Proposal.

3.3 UPDATING THE PROJECT SCHEDULE

3.3.1 When the Owner has approved the Baseline Project Schedule, the Contractor shall update the Project Schedule for Pre-Construction and Construction Services at least once per calendar month and submit reports at least seven (7) calendar days prior to the Owner's monthly Project Progress Meeting.

3.3.1.1 Project Schedule updates shall be based on actual Work progress, current logic, and remaining durations.

3.3.1.2 The Owner will determine which meeting will be designated as the Owner's monthly Project Progress Meeting.

3.4 MONTHLY PROJECT SCHEDULE REPORTS

3.4.1 The Data Date for all Project Schedule Update Reports shall be current within five (5) calendar days of submission to the Owner.

3.4.2 Contractor shall submit a Total Float usage log with Contractor's monthly Project Schedule Update Reports that identifies the number of days lost or gained each month.

3.4.3 Owner retains the authority, which shall not be unreasonably withheld, to approve or reject Contractor's utilization of Total Float. If Contractor desires to utilize a portion or all of the Total Float, Contractor must submit a written request with its monthly Total Float usage log to the Owner seeking Owner's written approval of utilization of Total Float.

3.5 SUBMITTING MONTHLY PROJECT SCHEDULE REPORTS

3.5.1 The Contractor shall submit one (1) electronic schedule back-up in ".mpp" format and one (1) paper copy of the Project Schedule to the Owner.

3.6 FORMATING PROJECT SCHEDULE REPORTS

3.6.1 Electronic copies shall be submitted on compact discs and as attachments to electronic mail.

3.6.1.1 All electronic Project Schedule submittals shall be "backups" created in the specified software and included on the website if required, within one (1) calendar day of required completion.

3.7 PROJECT SCHEDULE SLIPPAGE

3.7.1 If the Project Schedule indicates schedule slippage for two (2) consecutive calendar months or if the Owner notifies the Contractor of a determination that the Work is behind schedule, the Contractor shall develop a "Recovery Plan" to make immediate revisions to the work force, work-hours, shifts, material deliveries, or any other aspects of the Work.

3.7.2 The Contractor shall submit the “Recovery Plan” to the Owner, as required in the UGC, clearly describing all changes in the Project Schedule or work enacted and/or planned in order to ensure completion by the Contract Substantial Completion date.

3.7.2.1 The Owner has the right to review and comment on any “Recovery Plan” activities that include Owner participation or affect any Owner consultants or outside contractors.

3.7.3 When the Owner approves the “Recovery Plan”, the Contractor shall incorporate the proposed revision into the Baseline Project Schedule.

3.8 PROJECT SCHEDULE CHANGES

3.8.1 If the Owner or Architect/Engineer issues a Change Proposal, the Contractor shall submit a proposed revision for all proposed Contract changes that affect the Substantial Completion date or remaining Float with the Change in Work Cost Analysis Form.

3.8.1.1 Proposed revisions shall be accompanied by a narrative listing of the affected activities including a statement of the expected overall impact of the change proposed.

3.9 EXCUSABLE DELAYS AND TIME EXTENSIONS

3.9.1 Excusable delays shall be administered per the UGC.

3.9.2 If an excusable delay extends the Contract Substantial Completion date, the Owner may extend the Contract time by the number of excusable calendar days lost on the Project Schedule or take other actions as appropriate under terms of the Agreement.

3.9.2.1 Change Proposal pricing that does not impact the Substantial Completion date or does not include a proposed revision prior to approval by the Owner shall not include a time extension.

3.9.3 Once the Owner accepts a time extension and authorizes the Contractor to proceed with the Contract change, the proposed revision shall be incorporated into the Baseline Project Schedule.

END OF SECTION 01 32 00

SECTION 01 35 16 – ALTERATION PROJECT PROCEDURES

PART 1 - GENERAL

1.01 RELATED DOCUMENTS

A. Drawings and general provisions of the Contract, including General Conditions and Division 01 Specification Sections, apply to this Section.

B. Specifications throughout all Divisions of the Project Manual are directly applicable to this Section, and this Section is directly applicable to them.

1.02 SUMMARY

A. Basic and supplemental requirements for Work that alters existing facility components, systems or equipment.

1.03 REFERENCE STANDARDS

A. The latest published edition of a reference shall be applicable to this Project unless identified by a specific edition date.

B. All reference amendments adopted prior to the effective date of this Contract shall be applicable to this Project.

C. All materials, installation and workmanship shall comply with the applicable requirements and standards addressed within the Contract Documents.

1.04 DEFINITIONS

A. Cutting: Removal of in-place construction necessary to permit installation or performance of other Work.

B. Patching: Fitting and repair work required to restore surfaces to original conditions after installation of other Work.

C. Demolish: Completely remove and legally dispose of off-site.

D. Remove: Detach items from existing construction and legally dispose of them off-site, unless indicated to be removed and salvaged or removed and reinstalled.

E. Remove and Salvage: Detach items from existing construction and deliver them to Owner [ready for reuse].

F. Remove and Reinstall: Detach items from existing construction, prepare them for reuse, and reinstall them where indicated.

G. Salvage: Carefully detach from existing construction, in a manner to prevent damage, and deliver to Owner [ready for reuse]. Include fasteners or brackets needed for reattachment elsewhere.

H. Recycle: Recovery of demolition waste for subsequent processing in preparation for reuse.

I. Existing to Remain: Existing functional items of construction that are not to be removed and that are not otherwise indicated to be removed, removed and salvaged, or removed and reinstalled.

J. Sensitive Area: The following areas are considered “Sensitive” by MD Anderson Cancer Center:

1. Sensitive Areas listed apply to human and animal occupancies.

2. Additional areas may also be considered Sensitive as determined by MD Anderson Cancer Center for a particular project. The Contractor shall coordinate with the Owner’s Project Manager prior to any installation Work to identify Sensitive Areas not listed.

a. Operating Rooms

b. Invasive Procedure Rooms

c. Bone Marrow Transplant / Protective Environment Areas

d. Intravenous Procedure Rooms (Chemotherapy)

e. Intensive Care

f. Inpatient Recovery Rooms

g. Sterile Supply Storage

h. Sterile Processing

i. Pharmacy I V Admixture

j. Pharmacy Drug Preparation

k. Pharmacy Drug Storage

l. Food Preparation, Storage, Serving

m. Data Centers

n. Electrical Equipment Rooms

o. Telecommunication Rooms

p. Potable Water Storage Tanks

q. Any Room Containing Imaging Equipment that May be Damaged Due to Water Leakage (MRI, Cat Scan, Etc.)

r. Animal Holding Rooms

s. Animal Procedure Rooms

t. Laboratory Clean Rooms

1.05 QUALITY ASSURANCE

A. Perform remodeling, alteration, demolition, cutting, patching, removal, refinishing, relocation, and disposal work in accordance with Federal, State, and local health and safety standards, codes, ordinances, and the University of Texas MD Anderson Cancer Center Institutional Safety Policies. Where conflicts occur, comply with the more restrictive requirements.

B. Perform remodeling, alteration, demolition, cutting, patching, removal, refinishing, and relocation work in such a manner as to preserve the aesthetic and structural integrity of materials and construction.

C. When the Contractor determines that it is unavoidable to locate new fan coil units, drainage piping, or waste piping above a Sensitive Area, the Contractor shall notify the Owner's Project Manager in writing and obtain a clear direction to proceed prior to any installation of Work.

D. When the Contractor determines that an existing penetration cannot be sealed due to accessibility, constructability or any other condition, the Contractor shall notify the Owner's Project Manager in writing and obtain a clear direction to proceed prior to any installation of Work.

E. When the Contractor determines that an existing fan coil unit cannot be relocated beyond the perimeter of a Sensitive Area, the Contractor shall notify the Owner's Project Manager in writing and obtain a clear direction to proceed prior to any installation of Work.

F. Portions of the existing remaining medical vacuum and gas systems affected by Work within this Project shall be re-certified in strict accordance with NFPA 99.

1.06 SUBMITTALS

A. Submit schedule for all proposed shut-downs prior to start of Work. The Contractor shall notify the Owner's Construction Inspector and the Owner's Project Manager, in writing, of any planned utility outages in accordance with Owner's Special Conditions.

B. Work with noise-producing equipment is subject, at all times, to Owner's approval of entire procedure. Submit a schedule of all such operations to the Owner's Project Manager at least two weeks in advance of need and secure approval of the Owner before proceeding.

1.07 NEW AND EXISTING PENETRATIONS

A. All new and existing penetrations through rated partitions and floor slabs within the Project boundary shall be sealed to provide a fire/smoke rating equal to or greater than the rating of the floor slab.

B. All new and existing penetrations through floor slabs within the Project boundary shall be sealed watertight.

1.08 EXISTING COMPONENTS ABOVE SENSITIVE AREAS

A. All existing sanitary waste, sanitary vent and storm drainage piping located within the ceiling or exposed above a Sensitive Area shall be provided with heavy-duty joint connections having a minimum 15 psi pressure rating and meeting the performance criteria of Factory Mutual 1680.3.

B. All existing piping located within the ceilings or exposed above a Sensitive Area receiving cooling coil condensate, ice machine drainage or conveying contents having temperatures below 55 degrees F shall be insulated and vapor sealed to prevent condensation.

C. Existing fan coil units located within the ceiling or exposed above a Sensitive Area shall be relocated to a position beyond the Sensitive Area.

1.09 JOB CONDITIONS

A. Visit the Project Site to determine by inspection all existing conditions, including access to the Site, the nature of structures, objects, and materials to be encountered, and all other facts concerning or affecting the Work. Information on the Drawings showing existing conditions does not constitute a guarantee that other items may not be found or encountered.

B. Obvious existing conditions, installations, and obstructions affecting work of this Section shall be taken into consideration as necessary work and included as part of work of this Section, the same as though completely shown or described.

C. Seal off areas in which work is in progress from the occupied portions of the building to prevent entry of dust and noise into occupied portions of the building. Take all necessary measures to limit the amount of dust and dirt rising and scattering in the air to the lowest practical level.

   1. Where Work occurs immediately adjacent to occupied portions of the building, construct dust-proof partitions of nominal 3-5/8 inch metal studs with 5/8-inch Type X drywall, full height on both sides. Tape joints on the occupied side at non-fire rated partitions. Tape both sides full height at fire rated partitions. Fill partition cavity with sound-deadening insulation.

   2. Equip partitions with dustproof doors and security locks.

D. If temporary closures block required exits, provide closures with acceptable openings equipped with gasketed, self-closing doors that open in the direction of exit as approved by authorities having jurisdiction.

E. Provide temporary barricades and other forms of protection to protect Owner's personnel and general public from injury due to remodeling work.

   1. Provide protective measures as required to provide free and safe passage of Owner's personnel and general public to occupied portions of building.

   2. Erect temporary covered passageways as required by authorities having jurisdiction.

   3. Provide interior and exterior shoring, bracing, or support to prevent movement, settlement, or collapse of structure or element to be demolished and adjacent facilities or work to remain.

   4. Protect from damage existing finish work that is to remain in place and becomes exposed during remodeling operations.

   5. Protect floors with suitable coverings when necessary.

   6. Cover and protect furniture, equipment, and fixtures from soilage or damage when demolition work is performed in areas where such items have not been removed.

   7. Provide temporary weather protection during interval between demolition and removal of existing construction on exterior surfaces and installation of new construction to ensure that no water leakage or damage occurs to structure or interior areas of existing building.

   8. Remove protections at completion of work.

F. Furnish and maintain temporary types of protection as necessary to adequately protect and prevent accidental injury to the public, Owner's personnel and personnel employed at the work. Take all necessary precautions to keep trespassers out of work areas. Properly secure work areas from entry when work is not in progress.

G. Conduct demolition and removal operations and the removal of debris to ensure minimum interference with roads, streets, walks, and other adjacent occupied or used facilities. Do not close or obstruct streets, walks, or other occupied or used facilities without permission from authorities having jurisdiction. Provide alternate routes around closed or obstructed traffic ways if required by governing regulations.

1.10 TEMPORARY ELEVATOR USE

A. Designated existing elevators may be used by construction personnel and for materials. Coordinate use with Owner. Provide protective coverings for finish surfaces of cars and entrances.

1.11 EXISTING UTILITIES AND CONDITIONS

A. The location and description of utilities and conditions shown on Drawings are indicated from information available and are approximate only. Verify existing utilities and conditions.

B. Protect existing utilities and conditions from damage. Repairs to utilities and conditions damaged during the Work shall be the responsibility of the Contractor and shall be made promptly at no additional cost to the Owner.

C. Maintain existing utilities in operation at all times except where specific permission is given by Owner's Project Manager. Support and protect all exposed piping and utilities during demolition and utility rough-in.

D. All outages of utilities, sidewalks, parking areas, driveways or facility access shall be scheduled in advance with Owner in accordance with Owner's Planned Utility Outage Procedure as specified within Section 00 25 00 – Owner's Special Conditions.

E. Notify the Owner's Project Manager and all concerned parties prior to disconnecting and terminating abandoned utilities.

1.12 REMOVAL OF EXISTING CONSTRUCTION

A. Where permanently disconnecting domestic water, medical vacuum, medical gas, natural gas, treated water, drainage, vent, or other piping serving removed fixtures, inlets, outlets or equipment, remove all associated piping back to remaining active mains.

B. All existing floor drains that will not remain in service after Project completion shall be isolated from the remaining active building drainage and vent system. Floor drain bodies remaining within slabs shall be sealed watertight. Slab shall be finished to allow specified application of flooring or to match surface of the adjacent finished area. Completed patching of the slab shall prevent the passage of water and provide a structural integrity and fire rating equal to or greater than the existing slab. Remove all associated piping serving decommissioned floor drains located in suspended slabs back to remaining active mains.

C. All existing wall penetrations that will be unused due to removal of piping shall be permanently sealed to maintain the fire rating of the wall or floor.

D. All existing floor penetrations that will be unused due to removal of piping shall be permanently sealed to maintain the fire rating of the floor and to provide a watertight seal.

E. All existing supports serving removed piping, duct, conduit and equipment shall be removed.

F. Carefully remove and store all items indicated or required to be reused.

G. Perform demolition and removal work completely and remove debris from the Site. Use such methods as required to complete the Work within the limitations of governing regulations.

1. Proceed with demolition and removal work in a systematic manner, from the top to the bottom in areas indicated.

2. Remove debris in covered carts to limit air pollution.

3. Locate demolition equipment throughout the structure and remove materials so as to not impose excessive loads to supporting walls, floors, or framing.

4. Remove debris from elevated portions of building by chute, hoist, or other device that will convey debris to grade level in a controlled descent.

H. Fire, Smoke and Fire/Smoke Dampers

1. Contact and coordinate with Owner's Environmental Health and Safety (EH&S) Department to identify existing dampers within the Project Boundary that are not indicated within Construction Documents and to determine acceptable actions to be taken.

2. When the Engineer and Owner's Environmental Health and Safety (EH&S) Department have determined that an existing fire, smoke, or fire/smoke damper is no longer required, the damper shall be decommissioned and removed from the Project site.

a. Disconnect operational and monitoring services and associated accessories.

b. Record and submit to Owner the device location, identification information, and monitoring connections.

3. Where complete removal is not an option, Contractor shall propose an alternate method of decommissioning, to be approved by EH&S. Such dampers shall be physically tagged stating that they have been decommissioned.

I. Cutting:

1. Structural Elements: If not specifically shown, but removal or alteration is required, perform such removal or alteration only upon written approval of the Architect/Structural Engineer. Do not damage or alter any structural element of the existing building. Where drilling or fastening to post-tensioned reinforced concrete construction is required, X-ray existing structure to determine tendon locations and potential for tendon tension release before proceeding. Notify Architect/Structural Engineer in each instance when conflict occurs. Architect/Structural Engineer will determine corrective action required. Do not proceed until corrective action has been received.

2. Concrete: Saw cut where exposed to view. Jack hammering with electric or pneumatic equipment is acceptable only with scheduled approval of Owner.

3. Masonry: Cut back masonry to joint lines and remove old mortar allowing space for repairs.

4. Ceramic, Structural Clay Tile, and Quarry Tile: Saw cut to natural joint lines; remove so that repairs or continuations of new work will be relatively imperceptible.

5. Resilient Tiles: Remove in whole units to natural breaking points and/or straight joint lines with no damaged or defective existing tiles remaining where joining new construction.

6. Plaster: Cut back to sound plaster on straight lines, and back bevel edges of remaining plaster. Trim and prepare existing lath for tying of new lath.

7. Woodwork: Cut back to a joint or panel line.

8. Existing Doors, Frames, and Sash: Remove in such manner as to facilitate filling in of openings or installation of new work, as required by the Drawings.

9. Cutting for Access to Mechanical and Electrical Systems: Removal of existing ceilings and the removal, cutting, and patching and replacement of existing walls and floors as may be necessary for access to valves, piping, conduit, and tubing by mechanical and electrical trades shall be included and performed as an obligation of, and as directed by the Contractor and accepted by the Owner.

J. Patching, Repairing, and Finishing Existing Work:

1. Perform in compliance with the applicable requirements of the Specification technical Section covering the work to be performed and the requirements of this Section.

   a. All holes and damaged areas exposed to view in ceilings, walls, and floors of all finished spaces shall be repaired. Repaired construction shall match existing adjacent construction and finish, unless otherwise indicated or specified.

   b. Minor surface abrasions, small nail holes, cracks, aged checked natural wood finish and other similar deterioration not visible, when viewed under finished lighting conditions, from a distance of 6 inches will not be required to be repaired if the base material is sound and suitable to receive the scheduled finishes, if any.

   c. Interior penetration holes in walls and ceilings of unfinished spaces and spaces not exposed to view shall be grouted and sealed with accepted materials to equal the sound seal and fire resistance rating of original construction.

   d. Penetration holes through exterior walls above grade shall be grouted and sealed as required to produce a weather tight seal.

   e. Penetration holes through exterior walls below grade shall be grouted and sealed to produce a watertight seal.

2. Concrete: Edges of existing concrete shall be kept damp for 24 hours and scrubbed with neat portland cement grout just before new concrete is placed; in lieu thereof, an accepted epoxy concrete adhesive may be used. Finish shall match existing adjoining work. Unless otherwise specified, all concrete for patching shall be 3,000 psi concrete. Reinforcing bars and dowels shall be provided where required. Where installation of concrete is impracticable, the openings shall be filled with dry packed non-shrink grout as directed.

3. Masonry: Patch with sound whole units to match existing. Joints shall match adjoining surfaces.

4. Lath: Lath areas to be patched as required, install as required for new lath, and wire-tie to existing lath at edges at 6 inch (15.2 cm) intervals. Lap lath 3 inch (7.6 cm) minimum.

5. Plaster: Dampen edges of existing plaster. Plaster patching shall be 3 coat work of type, thickness, and finish to match the existing work.

6. Damages: Promptly repair damages to adjacent facilities caused by demolition and removal operations at no additional cost to the Owner.

7. Painting and Finishing:

   a. Preparation: Prepare patched areas as required for new work. Wash areas to be repainted with neutral soap or detergent, thoroughly rinse, and sand when dry. Feather remaining paint edges smooth with sandpaper.

   b. Painting and Finishing: Conform to the applicable provisions of Painting Section. Prepare and build up bare areas and patches in existing painted surfaces with proper primer and intermediate coats, sand smooth and flush with adjoining surfaces. Paint all areas scheduled to be painted and/or repainted as specified in Painting Section of the Specifications, except the first or primer coat may be omitted on existing painted surfaces.

K. Disposal of Debris: Clean up all material, debris, and rubbish resulting from remodeling work, remove from the building and Site, and legally dispose of. Leave all areas of work in “broom clean” condition.

   1. All debris shall be transported out of the building in covered carts with no materials extending above the cart rim.

PART 2 - PRODUCTS

2.01 GENERAL

A. All materials shall meet or exceed all applicable referenced standards, federal, state and local requirements, and conform to codes and ordinances of authorities having jurisdiction.

B. Matching Existing Work: Except where otherwise specifically indicated or specified as a definite change, the finish materials and appearance of the new work shall match the existing contiguous materials and finishes in all respects. Repairs and/or continuations of existing work shall be relatively imperceptible in the finished work when viewed under finished lighting conditions from a distance of 6 feet (1.8 meters).

PART 3 - EXECUTION

3.01 SEQUENCING AND SCHEDULING

A. Schedule Work so as to impose a minimum of hardship on the present operation of the facilities and the performance of the work of other trades.

B. Maintain existing utilities indicated to remain; keep in service and protect against damage during demolition and removal operations.

C. Do not interrupt existing utilities serving occupied or used facilities, except when authorized in writing by Owner. Provide temporary services during interruptions to existing utilities, as acceptable to the governing authorities.

3.02 POST DEMOLITION CONFERENCE

A. Coordinate, schedule and conduct post demolition meetings prior to installation of new Work.

1. Purpose: Communicate existing conditions revealed by demolition that are not identified on Contract Drawings. Determine scope, cost and schedule impacts and obtain a clear direction to proceed.

2. Attendees: Contractor, Owner's Project Manager, Owner's EH&S Representative, Architect/Engineer.

3.03 INSTALLATION

A. Check Drawings carefully and thoroughly investigate existing building construction.

B. Protect work to remain from damage. Use barricades, tarpaulins, temporary walls, plywood, planking, masking, and other suitable means and methods as accepted.

1. Restore accidental or careless damage to work to remain in place to a condition as good as or better than existed before work was commenced and at no additional cost to the Owner.

C. Provide all shoring and bracing necessary to positively protect existing elements of the building. Use material adequate to support anticipated loads with a properly calculated margin of safety. Provide for transfer of stresses to successively lower construction.

D. All work must be staged and performed so that disruption to occupied areas is minimized and so that these areas are available and suitable for their intended use during normal hours of operation. Any work that would incur excessive noise, dust, or disruption must be scheduled in advance with the Owner's Project Manager.

E. Carefully remove and replace items of existing construction indicated to remain upon completion of the Contract, but which require removal to complete the work. Match condition of construction prior to the start of the Work unless otherwise required. Carefully remove items indicated for relocations in new Work, or to be retained by Owner, to avoid damage, thoroughly clean, and reinstall as indicated or store as directed.

F. Items of salvable value to the Contractor may be removed from the structure as the work progresses. Salvaged items must be transported from the Project Site as they are removed. Storage or sale of removed items on the Project Site will not be permitted.

1. Remove and dispose of all demolition materials, equipment and debris off premises, unless identified for salvage on the drawings. Deliver salvaged items to a location within a 5 mile radius of MD Anderson as directed by the Owner's Project Manager. Protect and store all items identified for reuse. Contractor assumes no salvage value for items removed and not reused in the Project.

END OF SECTION 01 35 16

SECTION 01 35 23 – PROJECT SAFETY REQUIREMENTS (OCIP)

PART 1 – GENERAL

1.1 OVERVIEW

Owner's objective is an injury and incident-free project, with a focus on project safety that shall not be compromised to achieve any other business objective. Contractor shall structure an effective and systematic safety management approach that emphasizes continuous safety process improvement.

Owner has included in this specification numerous safety requirements that are noticeably more stringent than that of the Occupational Safety and Health Administration (OSHA). The reader will see text throughout this specification, matching the format of this paragraph, and is intended to call attention to the fact that the requirement being described is more stringent than that of OSHA. However, this does not relieve the reader from reading and understanding the entire Specification.

1.2 GENERAL REQUIREMENTS

Owner recognizes that Contractor and Subcontractors may have existing safety management programs with established safety policies, processes, procedures, and work practices. Owner will support these where they prove to be as effective and meet the intent and purpose of this Section. Upon request by Owner, Contractor and/or Subcontractors (of any tier) shall promptly produce and provide copies of any required documents related to Project safety. Where opportunities for improvement are identified, Contractor and Subcontractors (of any tier) shall work collaboratively with Owner in making appropriate revisions to progress toward an injury and incident-free workplace.

1.3 DEFINITIONS

1.3.1 The term "Owner's Safety Representative" (OSR) as used throughout the Contract Documents shall refer to any construction safety professional(s) who are acting on behalf of Owner.

1.3.2 The term "Project Safety Coordinator" (PSC) as used throughout the Contract Documents shall refer to Contractor's construction safety professional who is acting on behalf of Contractor and who shall be responsible for safety training, inspections, incident investigations, record keeping, reporting, incident response, and claims management, and shall serve as the technical advisor to Contractor's project staff for all safety issues.

1.3.3 The term "Project Safety Assistant(s)" (PSA) as used throughout the Contract Documents shall refer to any Contractor's construction safety professional who is acting on behalf of Contractor and who shall perform safety related tasks as delegated by the PSC.

1.3.4 The term "Subcontractor's Safety Representative" (SSR) as used throughout the Contract Documents shall refer to a person employed by the Subcontractor (of any tier) who is identified as the recognized safety representative and who possesses the proper credentials for the position. The SSR is understood to be the immediate supervisor unless identified and documented

otherwise. All Subcontractors (of any tier) shall provide at least one recognized SSR anytime the Subcontractor (of any tier) is working on the project.

1.3.5 The term "qualified" as used throughout this Section shall match the definition within the OSHA construction safety standards (Title 29 CFR, Part 1926). *Qualified means one who, by possession of a recognized degree, certificate, or professional standing, or who by extensive knowledge, training, and experience, has successfully demonstrated the* ability *to resolve problems relating to the subject matter, the work, or the Project.*

1.3.6 The term "competent" as used throughout this Section shall match the definition within the OSHA construction safety standards (Title 29 CFR, Part 1926). *Competent person means one who is capable of identifying existing and predictable hazards in the surroundings or working conditions which are unsanitary, hazardous, or dangerous to employees, and who has authorization to take prompt corrective measures to eliminate them. In addition to the OSHA standard, this person must be trained and knowledgeable in the construction and/or operation of specific equipment or a specific work method and show proper documentation to support such training. Basic awareness training will not be acceptable for this position.*

1.3.7 The term "Construction Area" as used throughout this Section shall refer to the portion of Owner's property that is released to Contractor's care and control and is designated by Contractor as the space where actual construction efforts will be undertaken to execute the Work.

1.3.8 The term "Administration Area" as used throughout this Section shall refer to the portion of Owner's property that is released to Contractor's care and control and is designated by Contractor as the space where support efforts will be undertaken to provide administrative needs for the Work. If the Project has project office trailers within the confines of Owner's property, that space and the parking area around it may be designated as an Administration Area.

1.3.9 The term "worker" as used throughout this Section shall refer to any person who is assigned specifically to the Project, has successfully completed the Project safety orientation, and has been issued a project-specific ID badge.

1.3.10 The term "visitor" as used throughout this Section shall refer to any person who is not assigned specifically to the Project. Visitors will not be issued a project-specific ID badge and shall not be allowed access to the "construction areas" unless they are escorted by a member of Contractor's project management staff or an Owner representative.

1.3.11 The term "Owner's Designated Representative" (ODR) as used throughout the Contract Documents shall refer to the individual(s) assigned by Owner to act on its behalf, and to undertake certain activities as specifically outlined in the Contract. For the purposes of this specification section, the words "Owner" and "Owner's Designated Representative" are interchangeable.

1.3.12 Capitalized terms not defined above shall have the meanings set forth in the Agreement or the Uniform General Conditions for University of Texas System Building Construction Contracts (UTUGCs), as appropriate, unless the context clearly requires otherwise.

1.4 PURPOSE

1.4.1 Contractor shall bear overall responsibility for all aspects of safety for the Project.

1.4.2 Contractor shall, at all times, provide adequate resources, equipment, training, and documentation to:

1.4.2.1 Comply with the requirements of this Section and all applicable federal, state, and local statutes, standards, and regulations.

1.4.2.2 Provide a safe work environment at the Project.

1.4.2.3 Instill a culture of safe behavior in all supervisors and workers.

1.4.2.4 Ensure a universal understanding that safety and health issues take precedence over all other considerations at the Project.

1.4.3 In any circumstance where this Section differs from, or conflicts with any statutory requirement, the more stringent shall apply.

1.4.4 The ODR reserves the right to have any person removed from the Project for disregarding Project safety requirements. Removal of the Project Superintendent, Project Manager, any Supervisor, PSC, PSA or SSR may result in work stoppage that will remain in effect pending approval of a suitable replacement. Contractor shall not be allowed any consideration for time or monetary compensation for said stoppage.

1.4.5 The ODR reserves the right to deduct from the Contract Sum any safety related expenses that Owner incurs as a result of Contractor's, or any Subcontractor's, failure to comply with the requirements of this Section.

1.4.6 The ODR will deny requests for time extensions and/or monetary considerations whenever Owner intercedes on behalf of safety compliance as a result of Contractor's, or any Subcontractor's, failure to act as required by Contract.

1.5 RELATED DOCUMENTS

In addition to specific references indicated herein, Contractor's attention is also directed, but not limited, to the following publications and documents:

1.5.1 Current edition of the Uniform General Conditions for University of Texas System Building Construction Contracts (UTUGC);

1.5.2 Owner's Special Conditions;

1.5.3 Current edition of OSHA Safety Standards for the Construction Industry, CFR Title 29, Part 1926.

PART 2 – PRODUCT

2.1 PROJECT SAFETY COORDINATOR (PSC)

2.1.1 Contractor must provide a qualified Project Safety Coordinator (PSC). The PSC is required from the commencement of construction until at least such time as Owner's Designated Representative (ODR) issues certification of Substantial Completion. ODR's written concurrence is needed prior to PSC removal. Overall recent career experience must include at least seven (7) years that have been dedicated solely to building construction safety with at least five (5) years of construction safety process management experience. Any candidate that has completed a four (4) year degree in a safety-related discipline must show at least three (3) years of actual field experience in safety to qualify for a PSC position. The PSC must have practical knowledge, working experience, and documented continuing education in fall protection, scaffolds, excavation, confined space, crane/equipment operations, electrical, incident investigation, and other such safety/health related training. Training of less than four (4) hours in duration per topic will not be considered acceptable for this requirement. Continuing education of noted training must be dated within five (5) years of the Effective Date of the Agreement. OSHA 10/30-hour Construction Outreach or OSHA 510 certificates will not be acceptable for this training requirement. The PSC shall possess a certificate of completion for the OSHA 500 (Train the Trainer in Occupational Safety and Health for Construction Industry) or OSHA 502 (Update for the Construction Industry Outreach Trainer). The PSC must show evidence of specialized training for Emergency First Aid, Cardio Pulmonary Resuscitation (CPR), and Automatic External Defibrillator (AED) current to within two (2) years. Formal submittal of proof must be provided prior to acceptance and before any portion of the Work will be allowed to commence. Owner reserves the right to determine acceptability of the submitted training. Any candidate proposed that does not meet these minimum qualifications will not be accepted.

2.2 PROJECT SAFETY ASSISTANT (PSA)

2.2.1 Project Safety Assistant(s) (PSA(s)) are also required. Number of and placement on the Project is determined by the final contracted construction amount and average daily work force. Primary recent experience of any proposed PSA, must include at least five (5) years that have been dedicated solely to building construction safety. The PSA must have practical knowledge, working experience, and documented continuing education in fall protection, scaffolding, excavations, confined spaces, crane/equipment operations, electrical, incident investigation, and other such safety/health related training. Training of less than four (4) hours in duration per topic will not be considered acceptable for this requirement. Continuing education of noted training must be dated within five (5) years of the executed contract. An OSHA 10/30 Construction Outreach or OSHA 510 certification will not be acceptable for this training requirement. The PSA shall possess a certificate of completion for the OSHA 510 (Occupational Safety and Health Standards for the Construction Industry) or the OSHA 500 (Train the Trainer in Occupational Safety and Health for Construction Industry) or OSHA 502 (Update for the Construction Industry Outreach Trainer) in addition to the continuing education requirements previously noted. The certificate must be dated within five (5) years of the Effective Date of the Agreement. The PSA must show evidence of specialized training for Emergency First Aid, Cardio Pulmonary Resuscitation (CPR) and Automated External Defibrillator (AED) current to within two (2) years. Formal submittal of proof must be provided prior to acceptance. Owner reserves the right to determine acceptability of the submitted training. Any candidate proposed that does not meet these minimum qualifications will not be accepted.

2.2.1.1 On projects over $180 million, the option of a PSA-IT (In-Training) may be considered for the required third PSA after the initial qualified PSAs are already active on the project. At no time shall a PSA-IT be used as a permanent substitute in place of a fully qualified PSA when required. Qualifications for individuals seeking PSA-IT classification shall comply with one of the following options:

2.2.1.1.1 Option I (College Degree in Safety) - Individuals that have obtained a Bachelor's or Master's Degree in Safety

1. The safety degree will count for four (4) years of the five (5) years currently required for a PSA position.
2. Successful achievement of a nationally recognized safety certification (CSP, CHST). Owner reserves the right to determine years of credit based on the recognition of the certification, requirements to achieve certification, and continuing education to maintain certification. This option can be used to add additional experience.
3. Successful completion of one (1) year of dedicated safety work experience on the Project.

Once this individual completes all the requirements indicated above for this option, the "In Training" will be dropped and the individual will be consistent with the current requirements of this Section.

or

2.2.1.1.2 Option II (Field Experience Only) - Individuals that have a minimum of seven (7) years in the construction industry and two (2) years of safety responsibilities that are ancillary to their primary duties

1. The experience noted above will count for two (2) years of the five (5) years currently required for a PSA position.
2. Must have documented successful completion of initial training (minimum of eight (8) hours) each in cranes, electrical, fall protection, excavations and soil mechanics, scaffold, permit–required confined space, and incident investigation and
3. Documented successful completion of Supervisor Safety Training or equivalent from an OSHA Training Institute such as TEEX, UT Arlington, etc.

Once this individual completes all the requirements indicated above for this option, the experience level will be counted as four (4) years of dedicated safety experience. At successful completion of one (1) year of dedicated safety work, the "In Training" will be dropped and the individual will be consistent with the current requirements of this Section.

2.3 PSC AND PSA - Verification of Qualifications

2.3.1 The qualifications and previous work experience of the proposed Project Safety Coordinator and Project Safety Assistant(s) shall be submitted with the RFP. Based on final Contractor selection for the Project, additional information for the Project Safety Coordinator and Project Safety Assistant will be required prior to written acceptance for the position. Prior to Owner issuing a

Notice to Proceed with Construction Services, Contractor must provide resumes for the proposed PSC and PSAs. Contractor selection for the project does not guarantee proposed PSC and/or PSA acceptance. Any PSC or PSA additions or changes after the original acceptance date(s) must be formally submitted for consideration to Owner. In the case of the PSC, work shall not be allowed to commence prior to written acceptance by Owner. In the case of the PSAs, each must be assigned to the project on or before the worker count reaches the numbers indicated in Sections 2.4 and 2.5. Any cost related to Contractor's failure to meet this requirement will not be reimbursed by Owner and extension of the Contract Time will not be allowed.

2.3.2 For two (2) years of military service that demonstrates construction safety experience or an Associate's Degree in the field of safety, two (2) years of required experience will be credited for the requirements listed above. For four (4) years of military service that demonstrates construction safety experience or a Bachelor's (Undergraduate) Degree in a safety related field, four (4) years of required experience will be credited for the requirements listed above. Military experience and/or degree will only receive credit once. A professional certification in a safety related field (CSP, OHST, CHST, etc.) may receive credit for up to four (4) years of experience in addition to the years noted above. The ODR reserves the right to determine year(s) of credit based on recognition of certification, requirements to receive certification, and continuing education requirements to maintain certification.

2.4 PSC AND PSA – Determining the Number of Required PSCs and PSAs

2.4.1 The total number of PSCs and PSAs for a Project will be determined by the anticipated total cost for construction services for the completed project using the values below:

2.4.1.1 For projects up to and including Ten Million Dollars ($10,000,000), only the PSC shall be required.

2.4.1.2 For projects over Ten Million Dollars ($10,000,000) and up to and including Thirty Million Dollars ($30,000,000), the PSC and the initial PSA will be required. For projects over Thirty Million Dollars ($30,000,000) and up to and including One Hundred and Eighty Million Dollars ($180,000,000), the PSC, initial PSA and an additional PSA will be required. For projects over One Hundred and Eighty Million Dollars ($180,000,000), the PSC, initial PSA, and two (2) additional PSAs will be required. Based on scope of work and/or anticipated hazard(s), additional PSA(s) may be required. Any additional PSA(s) beyond those noted above shall be determined and negotiated by Owner prior to submittal of a Guaranteed Maximum Price (GMP) Proposal.

2.5 PSC AND PSA -- Placement on the Project and Removal from the Project

2.5.1 The placement and removal of the PSC and any PSA for the Project will be determined by the daily population of persons, using the following:

2.5.1.1 One (1) PSC shall be provided by Contractor and shall be assigned full time, have no duties other than safety, and be dedicated daily to the Project from the commencement of construction activities until at least Substantial Completion. Owner's written concurrence is required prior to release.

2.5.1.2 The initial one (1) PSA shall be provided by Contractor and shall be assigned full time, have no duties other than safety, and be dedicated daily to the Project at the time that the daily population reaches twenty-five (25) persons, and shall remain on the Project until at least Substantial Completion and the population decreases to less than 25 persons. Owner's written concurrence is required prior to release.

2.5.1.3 The second PSA shall be provided by Contractor and shall be assigned full time, have no duties other than safety, and be dedicated daily to the Project when the daily population at the Project rises to one hundred and fifty (150) persons. Additional PSAs shall be provided by Contractor and shall be assigned full time, have no duties other than safety, and be dedicated daily to the Project when the daily population increases by another increment of one hundred and fifty (150) persons. The additional PSAs shall remain on the Project until the daily population falls below the number that required them to be added. Owner's written concurrence is required prior to release.

2.5.1.4 For Projects that involve multiple phases or stages and scope adjustments through the execution of Change Orders, the value for construction services shall accumulate as additional packages of work are added to the overall Work. If there are significant gaps between the head count of the previous or current Work and the additional Work, Owner will decide if the additional work shall impact only the demand for additional PSAs. The requirement for the PSC will remain as indicated in Section 2.5.1.1.

2.5.1.5 **During scheduled daily work, a full complement of safety persons must be on Site in the numbers as required in Sections 2.5.1.1, 2.5.1.2 and 2.5.1.3. If either the PSC or any of the assigned PSAs will not be on Site during the project work scheduled, Owner must be notified in writing with a detailed plan for replacement no less than two (2) weeks prior to the absence (for non-emergencies only) or as soon as the safety person's status is confirmed (for emergencies only). An acceptable replacement must be provided if the absence will be for more that twenty-four (24) continuous hours in any week or as directed by the ODR. If any other work (nights, weekends, or holidays) is planned, the crew size of that specific shift shall determine the number of safety personnel required, but at least the PSC or one (1) PSA must be on Site during any work activities. The number of safety persons on Site during nights, holidays, or weekends must be with written concurrence of the ODR.**

2.6 SUBCONTRACTOR'S SAFETY REPRESENTATIVE (SSR)

2.6.1 Each Subcontractor, of any tier, shall declare one (1) or more employees to be its designated SSR. The SSR shall be dedicated to the Project for on-site safety responsibilities. This position cannot be delegated to another tiered subcontractor.

2.6.2 The SSR may have collateral duties, but must be on the Site when any part of the applicable Subcontractor's work is being performed. The PSC shall formally approve each SSR prior to the commencement of work for that Subcontractor.

2.6.3 Each Subcontractor's SSR shall possess a certificate of completion for the OSHA 30-hour Outreach Training in the Construction Industry. Remaining tiered Subcontractor SSRs shall possess at least a certificate for the OSHA 10-hour Outreach Training in the Construction

Industry. Certificates must be dated within four (4) years of the executed Subcontract. Only a sub-tiered contractor that will have no more than three (3) workers on the project during their entire scope of work may petition to be excluded from this requirement. Any exception shall be by written approval of Owner.

2.7 CONTRACTOR PROJECT SAFETY MANAGEMENT PLAN (PSMP)

2.7.1 Contractor shall develop, implement, and furnish adequate resources for its PSMP.

2.7.2 The objectives and intent of the PSMP shall include, but not be limited to:

2.7.2.1 Anticipating, planning, controlling and coordinating work to eliminate hazards, minimize risks, and aggressively manage losses involving injuries or property damages;

2.7.2.2 Ensuring education and training for best safety practices by all workers and holding supervisors accountable for safety performance;

2.7.2.3 Documenting and recording preventative measures, establishing inspection, notification, and investigation requirements, and measuring results of performance;

2.7.2.4 Providing protection for adjacent property and safety for the public.

2.7.3 The PSMP shall address the inclusion of Owner SafetyNet Program for electronic collection of safety observations. The terms of this Owner-directed Program shall not be replaced by any existing program including any existing version of the SafetyNet Program already used by Contractor. Within fourteen (14) calendar days of the issuance of the Notice to Proceed with Construction, Contractor shall have available a means to record field observations.

2.7.4 Contractor shall submit a complete draft of the PSMP to Owner for review and written acceptance prior to the issuance of the Notice to Proceed with Construction. Contractor shall incorporate Owner's comments into a final draft and shall resubmit the amended version to Owner within thirty (30) calendar days following the return date of Owner's comments to the initial draft.

2.7.5 Beginning with the Notice to Proceed with Construction, the PSC shall formally evaluate and update the PSMP and its supporting documentation as construction activities dictate, but at least semi-annually to ensure effectiveness and continuous improvement. The PSC must provide means to verify required evaluation and update.

2.8 PERSONAL PROTECTIVE EQUIPMENT (PPE)

2.8.1 PPE shall be required for all persons in the Construction Area. The following items shall be furnished, inspected, and maintained by the worker's employer:

2.8.2 Hard hats shall be ANSI stamped (Z89.1-1997, Type I, Class E, G and C). Hard hats shall be worn 100% of the time in the Construction Area, with the brim forward (or as allowed by the manufacturer). "Cowboy" style hard hats shall not be allowed (even if ANSI stamped). Hard

hats with noticeable wear or damage shall be replaced. Each hard hat shall be examined by the PSC or PSA during the Project Safety Orientation to confirm acceptable condition.

2.8.3 Eye protection (Safety Glasses) shall be stamped ANSI Z87. If a worker wears prescription glasses (plastic lens only) that are not marked Z87, the worker's employer shall furnish goggles or safety glasses that are designed to fit over another pair of glasses. Eye protection (Safety Glasses) shall be worn 100% of the time in the Construction Area. Anytime power actuated tools, electric or air operated grinding tools, electric or air operated impact tools, chop saws, masonry saws, chainsaws, or drilling tools are used, double eye and face protection shall be worn. Eye protection must be designed to prevent any air borne material from penetrating between the protection and the eyes.

2.8.4 High visibility vests or high visibility upper body clothing (equivalent to ANSI Class 2 or greater as applicable) shall be worn in the Construction Area. Primary work activities such as traffic control, excavations, rigging from ground level, exterior work at ground level or sub-ground level, earth moving operations may require ANSI Class 3.

2.8.5 Contractor shall purchase and maintain an appropriate inventory of types and sizes to be able to furnish a hard hat, pair of safety glasses and vest for up to ten (10) Owner representatives who may visit the Project.

2.8.6 Hearing conservation and protection shall meet or exceed OSHA requirements. Except for suppression of sound energy level, no devices or equipment shall be placed in or over the ears. Portable radios, cell phones or any other electronic devices shall not be used by the general work force for any reason while in the Construction Area. Use by supervision, project management, and safety persons is allowed for work related and emergency communications only. Any additional persons using these devices must be by written concurrence of the ODR. Music devices with or without ear pieces are strictly prohibited by anyone while in the Construction Area. Contractor may designate an area inside the limits of the Project but outside of the active Construction Area where use of cell phones is allowed during scheduled breaks and lunch only. Location must be by written concurrence of the ODR.

2.8.7 Hand protection that is designed to counter the potential for injury exposure shall be furnished by the worker's employer to each worker who must handle materials or equipment with sharp edges, slick surfaces, chemically reactive components or extreme temperatures.

2.8.8 Respiratory protection shall meet or exceed OSHA requirements.

2.8.9 Foot protection (work shoes) must have soles with a resistance to punctures, uppers that cover the entire foot and ankle and offer resistance to scrapes and cuts. Sandals, open-toed shoes, dress loafers, high-heels, and all athletic style shoes (including those with ANSI markings) are prohibited. The worker's employer shall provide additional protection, such as metatarsal guards, over work shoes (including steel toe boots) to each worker engaged in work activities create impact exposures.

2.8.10 Other OSHA required PPE shall be furnished as appropriate for specific tasks.

2.8.11 Other clothing:

2.8.11.1 Shirts shall not have noticeable holes and shall be free of profane, inflammatory, sexually explicit or discriminatory messages. Sleeve length shall cover the ball of the shoulder and shirt length shall reach waist of pants. Shirts shall not provide snag points.

2.8.11.2 Pants shall be full length. Holes must not be large enough to provide snag points or offer measurable amounts of exposed skin.

2.9 MEDICAL EQUIPMENT

2.9.1 Contractor shall purchase and maintain at least one (1) First Aid Kit on the Site as per the current version of ANSI Z308.1. Depending on the size, configuration of the Site, travel distance to retrieve, and time required to administer medical treatment, additional First Aid Kits may be required. The kit(s) should be readily available as needed.

2.9.2 Contractor shall purchase and maintain at least one Automatic External Defibrillator (AED) unit on the Site. The unit shall be located in Contractor Site office with appropriate signage and must be accessible whenever work is ongoing. Depending on the size, configuration of the Site, travel distance to retrieve, and time required to administer medical treatment, an additional AED unit may be required.

2.9.3 A minimum of two (2) Contractor employees, with current certifications for First Aid / CPR and for use of the AED, shall be at the Site whenever work is being performed.

2.10 WORKER TRAINING

2.10.1 **All workers shall be trained to perform their specific task(s). Formal documentation to support claimed training must be provided. Acceptable documentation for all certifications and training claimed shall contain the name of the training organization, name and title of the trainer(s), date of training, material covered with time spent on each topic, and evaluation process used to determine worker understanding of training. Documentation must be provided by the training organization. The database of employers' workers must be kept up to date and accessible for review as requested. No work or operations may commence without the PSC having completed review and acceptance under this Section. Owner reserves the right to determine acceptability of training being claimed.**

2.10.2 **For every brand and model of crane and motor driven equipment (earth moving, lift platforms, suspended stages, material handling, etc.) brought onto the Site, the using company shall transmit to the PSC a list of employees who are trained and authorized to operate that brand and model of equipment. Copies of training documentation in addition to any required certifications shall be provided. In addition, cranes shall be operated only by persons who possess certification from an organization that carries nationally recognized accreditation. Industrial Trucks (forklifts) shall only be operated by persons who have been certified by their employer. Individuals who possess required credentials shall demonstrate acceptable proficiency to the PSC or PSA.**

2.10.3 For every position that is required to assist with crane and motor driven equipment operations (flaggers, signal persons, riggers, spotters, etc.), the using company shall transmit to the PSC a list of employees who are trained and authorized to perform these functions.

2.11 PROJECT SAFETY SIGNS AND POSTERS

2.11.1 Contractor shall post a pair of safety regulation signs at every point of entry to the Site: one in English and one in Spanish. Font shall be black in color and sized in each language to completely fill the surface of a white-coated four-foot (4') vertical by eight foot (8') horizontal sheet of 3/4-inch plywood and shall contain only the following text:

ALL VISITORS, DELIVERY PERSONS, AND NEW WORKERS MUST REPORT TO THE PROJECT OFFICE <u>BEFORE</u> ENTERING ANY CONSTRUCTION AREA.

ALL PERSONS ENTERING ANY CONSTRUCTION AREA MUST WEAR STURDY WORK SHOES, PROPER CLOTHING, A HARD HAT AND SAFETY GLASSES AT ALL TIMES – NO EXCEPTIONS ARE ALLOWED DURING WORK HOURS.

POSSESSION OF WEAPONS, ALCOHOLIC BEVERAGES, CONTROLLED SUBSTANCES, OR DRUG PARAPHERNALIA WILL RESULT IN IMMEDIATE REMOVAL FROM THIS PROPERTY.

EXCEPT WHERE DESIGNATED (BY POSTED SIGNS AND AVAILABLE RECEPTACLES), USE OF ANY TOBACCO PRODUCT IS PROHIBITED ON THIS PROJECT.

THE MAXIMUM SPEED LIMIT FOR <u>ALL VEHICLES</u> ON THE PROJECT SITE IS NINE (9) MPH – LOWER SPEED MAY BE REQUIRED BY POSTED SIGNS IN SOME AREAS.

ONLY AUTHORIZED VEHICLES ARE ALLOWED ENTRY INTO CONSTRUCTION AREAS.

2.11.2 Contractor shall post a notice sign at the project office in English and Spanish. Font shall be black in color on a white coated board and size of letters shall be at least three inches (3") in height, and shall contain at least the following text:

VISITORS, DELIVERY PERSONS AND NEW WORKERS MUST CHECK-IN HERE FIRST.

COPIES OF SAFETY DATA SHEETS (SDS) FOR MATERIALS THAT WILL BE USED OR STORED ON SITE MUST BE DELIVERED BY ALL SUBCONTRACTORS TO THIS LOCATION AND SHALL BE AVAILABLE TO ANY REQUESTOR.

2.11.3 Contractor shall also post the following in locations that may easily be viewed by workers:

2.11.3.1 Color Codes for Quarterly Equipment Safety Inspections:

2.11.3.1.1 1st Quarter = White (January 01– March 31)
2.11.3.1.2 2nd Quarter = Green (April 01 – June 30)
2.11.3.1.3 3rd Quarter = Red (July 01– September 30)
2.11.3.1.4 4th Quarter = Orange (October 01 – December 31)

2.11.3.2 Emergency contacts list, including mobile phone numbers

2.11.3.3 Hazard Rating Guide (HMIS and/or NFPA)

2.11.3.4 Insurance Provider for Worker's Compensation Coverage for the Project

2.11.3.5 Others as required by Federal and/or State regulation

2.12 PROJECT SAFETY FILE DOCUMENTS

Contractor shall create and maintain files for Owner review. The following files shall be established in one location on the Site and shall be made accessible to Owner's agents during working hours. Additional files shall be created as directed by the ODR.

2.12.1 Project Safety Management Plan (PSMP)
2.12.2 Project Safety Management Plan Evaluations
2.12.3 Project Safety Orientation Checklists
2.12.4 Project Access Log
2.12.5 Project First Aid Log
2.12.6 Project Incident Notification, Investigation, and Evaluation Reports
2.12.7 All Qualified Person Certifications and Training Documentation
2.12.8 Project Competent Persons Lists
2.12.9 Project Equipment and Crane Operators Lists
2.12.10 Job Hazard/Safety Analysis (from each Subcontractor per operation)
2.12.11 Project Weekly Safety ("Tool Box") Meeting
2.12.12 Project Weekly Subcontractor Safety Representative (SSR) Meeting Minutes
2.12.13 Contractor Monthly Safety Report
2.12.14 Project Quarterly (Portable) Equipment Inspection Reports
2.12.15 Project Annual (Large) Equipment Inspection Reports
2.12.16 Project Permits (Closed Out)
2.12.17 Project Safety Infraction Records
2.12.18 Site Specific Safety Plan for Each Subcontractor on the Project
2.12.19 Drug / Alcohol Testing Confirmation Documentation
2.12.20 Subcontractor's Return to Work Policy and Acknowledgement
2.12.21 Contractor UTS Safety Specification 01 35 23 Requirements Acknowledgement

PART 3 – EXECUTION

3.1 POSITIONS, ROLES AND REQUIREMENTS FOR PROJECT SAFETY

3.1.1 Contractor's Project Superintendent and Project Manager

The Project Superintendent and Project Manager shall remain actively engaged and share responsibility for project safety throughout construction. Both shall support the PSC and PSA when actions are required to maintain a safe work environment at the Site. Project safety shall never be compromised to achieve any other business objective.

The Project Manager shall ensure that ALL tiered subcontractors receive a copy of this Specification Section 01 35 23 prior to the execution of any subcontract and ALL required safety documentation is submitted for review and acceptance by the PSC prior to the Subcontractor commencing work on the Project.

3.1.2 Project Safety Coordinator (PSC)

3.1.2.1 The PSC shall report directly to a corporate safety officer of Contractor and shall not report through Contractor's Project Management team.

3.1.2.2 If removal of the PSC is initiated by Contractor, the existing PSC shall remain in position until a replacement candidate has been proposed to and accepted by Owner in writing and is specifically assigned to the Project. If the PSC leaves before the proposal and acceptance procedure is concluded, Contractor shall temporarily install either a Safety Director (Regional or Corporate) or a professional construction safety consultant as the PSC until a suitable replacement is accepted in writing by Owner. Any temporary replacement must meet the qualification levels, perform the duties, and be present full time on the Site as required of the PSC in order for work to proceed. A permanent replacement shall be accomplished within thirty (30) calendar days.

3.1.3 Project Safety Assistant (PSA)

3.1.3.1 The PSA shall report to and perform duties as directed by the PSC.

3.1.3.2 If removal of a PSA is initiated by Contractor, the existing PSA shall remain in position until a replacement candidate has been proposed and accepted by Owner in writing and is specifically assigned to the Project. If the PSA leaves before the proposal and acceptance procedure is concluded, Contractor shall temporarily install either a Safety Director (Regional or Corporate) or a professional construction safety consultant as the PSA until a suitable replacement is accepted in writing by the ODR. Any temporary replacement must meet the qualification levels, perform the duties, and be present full time on the Site as required of the PSA position. A permanent replacement shall be provided within thirty (30) calendar days.

3.1.4 Both PSC and PSA

3.1.4.1 The PSC and PSA shall have the authority to direct Contractor and Subcontractor personnel to correct any safety deficiency.

3.1.4.2 The PSC and PSA shall have the authority to stop any operation(s) that involve(s) any level of risk.

3.1.4.3 The PSC and PSA shall be fluent in English and have immediate access to the necessary resources to communicate verbally with all workers on the Site.

3.1.5 Subcontractor Safety Representative (SSR)

3.1.5.1 The SSR name, emergency contact information, and documentation of qualifications shall be submitted to and accepted by the PSC prior to the commencement of any work activities by the Subcontractor. Per this section, at least one SSR is required; however, the Subcontractor must plan for and make available as needed a qualified replacement should the primary SSR not be on Site. The SSR shall have the authority to direct actions, stop work and enforce discipline for safety issues.

3.1.5.2 The SSR shall submit a written task specific Job Hazard/Safety Analysis (JH/SA) daily and as work conditions change for each of the risk exposures associated with the Subcontractor's portion of the work. Documentation of attendees and subject material covered must be provided by the SSR. Each submittal shall be reviewed and accepted by the PSC or PSA prior to commencement of the work operation that will create the exposure.

3.1.5.3 The SSR shall attend the Project Weekly Subcontractor Safety Representatives Meeting when their company is actively performing work at the Site.

3.1.5.4 The SSR shall accompany any injured worker that requires medical attention at a facility outside the Site. The SSR shall be responsible for notification to the PSC of any incident including near misses, and shall complete all the documents required to manage any insurance claims. The SSR shall participate in incident investigations that involve the Subcontractor's portion of the work.

3.1.5 5 Each SSR may be required to accompany the PSC or PSA during portions of each safety inspection that involves the Subcontractor's scope of work.

3.1.5.6 The SSR shall ensure that planning, training, equipment and materials are provided so that workers can perform their duties safely.

3.1.6 Work Crew Supervisor, Equipment Operator, Competent Person, Qualified Person, Medical Responder

3.1.6.1 Supervisors, Equipment Operators, Competent Persons, and Medical Responders for each of the positions held, shall be recognized by the employer through formal submittal to the PSC. Documentation of training with applicable certification shall be maintained in the Project safety file.

3.1.6.2 Designations of certifications and qualifications for special roles shall be clearly displayed on the back of the worker's photo identification badge.

3.2 PROJECT SAFETY MANAGEMENT PLAN (PSMP)

3.2.1 Safety Mission and Policy Statement. Contractor's Safety Mission Statement shall include a commitment to create and maintain a work environment that will eliminate or minimize all risk exposures for all workers at the Site. The Safety Policy Statement shall include

acknowledgement that Contractor is accountable for providing and controlling a safe environment for all workers and members of the public. An original signature and date to endorse and assure commitment by a Corporate Executive or Business Owner shall be affixed to this element of the PSMP. The PLAN shall include the following as a minimum:

3.2.2 Safety Roles and Responsibilities. This element shall outline and describe roles, responsibilities, and authority of each member of the Project staff for involvement in Site safety, security, incident command, and incident claims management. Contractor's Project organization chart shall indicate the reporting line for the PSC and PSA(s) as applicable. The PSC or PSAs shall not be responsible for activities associated with insurance enrollment and maintenance or any other duties not directly related to Project safety. Administration (clerical) duties related to safety can be transferred to another member of the Project staff. Overall intent is to maximize time in the field by the PSC and PSAs.

3.2.3 Safety Enforcement. This element shall include Contractor's disciplinary procedure for its own employees and for those of all Subcontractors. It shall include a description of the levels of severity and frequency (repetition) that will result in Contractor intervention and provide details of the retraining and/or disciplinary steps that will ensue from the possible combinations of unsafe behaviors. It shall also include discipline for supervisors who tolerate risk.

3.2.4 Safety Recognition and Commendation. This element shall include a description of how those workers who demonstrate exemplary safety behavior and those supervisors who manage, enforce, educate and promote safety will be recognized and commended. Any celebration that will occur as part of this element shall not be minimized with achievement of Project milestones that are associated with production, schedule, quality or budget. Owner supports the use of a Safety Commendation Program (SCP) as long as it is part of a more comprehensive safety program. Any commendation program must encourage worker participation, reinforce safety training, promote safe behavior and practices, and support continuous improvement of the safety process on the Project. No SCP shall be implemented that would discourage reporting of injuries, illnesses, property damage or unsafe working conditions. The SCP shall be prudent, economical, simple, and with a greater focus on daily positive feedback and commending safe work behavior than providing expensive or extravagant commendations. The SCP plan shall be submitted for Owner review and approval prior to implementation, and must include details regarding quantity and cost of suggested commendations. *Note: *If utilization of vendor donated items for commendations are anticipated, those items will be evaluated to confirm that they are reasonable and appropriate*.

3.2.5 Safety Hazards. This element shall include a narrative that recognizes existing Site conditions, foreseeable changes to existing conditions, local climate, Owner and public interface, environmental impact and remediation issues, skill and experience levels of available work force, utility interruptions, water supply sources, power supply sources, Owner facility provisions, sanitation requirements, parking, material storage areas, and proximity to students and public walkways and roadways. It shall contain a completed copy of the Anticipated Project Hazards Checklist (EXHIBIT A). It shall also be expanded throughout the duration of Work to include Subcontractor plans for elimination or minimization of risk. All portions of this element shall be consistent with existing procedures for the campus Environmental Safety and Health department, the campus Security department, and local municipal Fire and Rescue.

3.2.5.1 Hazard Communication ("HazCom"). Insert the elements required by OSHA. The PSC shall maintain a Hazardous Materials Inventory List with individual SDS for each and every hazardous substance brought onto the Site. In addition to the product label of contents, all containers with at least five (5) gallons of fluid capacity or twenty (20) pounds of chemical content shall include either HMIS or NFPA hazards warning labels (except drinking water and fire extinguishers). All products with HMIS/NFPA number ratings greater than zero, or one in any of the three categories (health, flammability, or reactivity), shall be considered as hazardous.

3.2.5.2 Environmental (Sensory) Hazards. Insert actions to measure worker exposures and to control hazards that may exist beyond OSHA permissible exposure limits (i.e. dust, fumes, noise, chemicals, respirable silica, and extreme temperatures). Also, include control and remediation plans for incidents that result in a spill or discharge of a potentially hazardous or toxic substance (liquid or gas). If lasers will be used, include plan to control worker exposure.

3.2.5.3 Roadway and Traffic Hazards. Insert actions to be taken at times when public roadways or sidewalks are affected by construction activities. Signs, devices, and procedures shall be identified where public passage is to be closed or altered. Procedures and training for flaggers shall be required and shall comply with all applicable Texas Department of Transportation (TxDOT) regulations for road safety; specifically, the Texas Manual on Uniform Traffic Control Devices (TMUTCD) shall be referenced.

3.2.6 Fire Prevention and Control

3.2.6.1 Insert arrangements and equipment necessary to provide adequate protection during all phases of construction. All portions of this element shall be developed to be consistent with Owner's existing procedures.

3.2.6.2 Burning, Welding, Flame Operations. Insert the process for issuance of a "Hot Work" permit (EXHIBIT B). Daily permit forms shall be issued by the PSC or PSA, even if the campus Environmental Health and Safety department desires to be involved and issues a campus permit. The permit form shall be completed by the SSR and returned to the PSC or PSA for field verification of noted conditions and written acceptance prior to start of operation. All permits shall expire at the end of the shift. Permits shall identify the fire watcher(s) and require pre-operation and post operation inspections.

3.2.7 Emergency Response. Describe each type and level of emergency that may reasonably be expected to occur on the Project. Insert response or rescue plan for each kind of potential emergency. This element shall address first aid, off-site medical care, property damage, rescue, project alarm signals, wind, flood, lightning strikes, and evacuation, threat of violence, protests or deliberately disruptive events. NOTE: Owner shall designate a spokesperson who shall be the only person authorized to communicate with the media. This element shall include a drawing or sketch of the Site (maintained for "as built" conditions) to indicate gates, emergency vehicle roadways, lay down areas, crane set up positions, exterior hoists, etc. All portions of this element shall be developed to be in accord and cooperation with Owner's existing procedures.

3.2.7.1 Incident Notification. Insert the list of personnel with mobile phone, email, position and company information who may be contacted. The ODR and others as directed shall be included in the incident notification process. Depending on potential severity of the incident,

notification may be in written and/or verbal form as directed. Incident notification flow shall be as indicated in EXHIBIT K. Indicate specific positions within the campus staff that may be contacted and/or involved in the notification and control process; i.e. Site control and utility management. Only the spokesperson designated by Owner shall have the authority to release live or pre-recorded video or written statements to the media. Contractor shall cooperate with the Owner's designated spokesperson and coordinate media arrangements as directed.

3.2.7.2 Site Security. Insert actions and control measures to prevent intrusion during work and non-work hours. Describe intended controls for perimeter security, gate security, pedestrian crosswalks, protection at public paths through and alongside construction areas, warning signage, etc. Identify special work that may not be performed during regular hours, and will require special precautions. Include descriptive detail for some method of gathering names and probable locations of workers who have not been cleared for safe departure during any type of emergency. Identify the position(s) of all who will possess this information and be prepared to convey critical details quickly to any outside emergency response command that might arrive at the Site.

3.2.8 **Project Trenching, Tunneling and Excavation. Insert soil boring reports, soil classification analysis, Site sketch and any other information that may support, explain or clarify the intent of this element. In addition to requirements in the UTUGCs, this element must be stamped and sealed by a Registered Professional Engineer recognized in the State of Texas in the field of Civil or Soils Engineering.**

3.2.9 Drug and Alcohol Impairment. Contractor, for itself and all Subcontractors, shall have a robust drug and alcohol screening and intervention plan. Insert details of Contractor policy for screening both direct employees and Subcontractor employees for the presence of controlled substances, prescription pharmaceuticals, and alcohol. Describe all of the types of testing and confirmation that Contractor requires and the tolerance thresholds for each substance. This element shall include, as a minimum, a detailed explanation of the following situations and mandatory testing events:

3.2.9.1 **Pre-project entry – Test results conducted within two weeks preceding issuance of badge for access to the Project Site. Proof of testing must be documented by company letter with representative name and title, date of testing, location of testing, indicates that testing meets or exceeds the NIDA 5 panel for drugs and DOT for alcohol, name of each tested worker, and results. Results must be negative. Other drug/alcohol testing may be required while working on the Project. ANY positive test result requires removal of the worker from the Project. Any worker that has been off the Project for more than sixty (60) consecutive days must also be retested within the two weeks requirement prior to re-entry.**

3.2.9.2 Post-incident

3.2.9.3 Random selection

3.2.9.4 Suspicion

3.2.10 Concrete (for slip-form, crane bucket, pump truck, cast-in-place)

3.2.11 Confined Space Entry (Permit Required and Restricted Entry)

3.2.12 Crane Operations (for set-up/use requirements and limitations)

3.2.13 Demolition (Mechanical and/or Explosive Blasting)

3.2.14 Electrical Power Service (address power supply and use during construction)

3.2.15 Fall Prevention and Protection (from elevations and at same level)

3.2.16 Hand and Power Tools

3.2.17 High Voltage ("Proximity Work")

3.2.18 Ladders and Stairs

3.2.19 Lock-out, Tag-out (Energy Isolation for sudden release of any kind of energy)

3.2.20 Respiratory Protection

3.2.21 Safety Inspection

3.3 PROJECT SAFETY MEETINGS AND TRAINING

3.3.1 Project Initial (Safety Kick-Off) Meeting

3.3.1.1 At any time within, but no later than, fifteen (15) calendar days after the issuance of the Notice to Proceed with Construction, Contractor shall arrange suitable accommodations and Owner will designate a representative to schedule and chair the meeting. Minimum attendance shall include Owner's project manager, Facilities Project Inspector(s), OSR, Contractor's project manager, Superintendent, PSC and PSA, and Contractor's Corporate Safety Representative. Additional representatives for Owner, the A/E, Contractor and local regulatory entities may also attend.

3.3.1.2 Contractor shall confirm the schedule availability for all non-Owner attendees at least fourteen (14) calendar days prior to the meeting date.

3.3.2 Initial Meeting with Subcontractors for acknowledgment of Safety Requirements

3.3.2.1 At any time after the date of intent to award each first-tier subcontract, but prior to commencement of any Work, Contractor shall arrange and chair a documented meeting with Subcontractor to explain safety requirements. Minimum attendance shall include Owner's Facilities Project Inspector(s), Contractor's PM, Superintendent, PSC, PSA, and SSR. Other interested parties for Owner and Contractor may also attend. Any lower-tier subcontractors that have been awarded part of the work shall also attend. A copy of Exhibit N to this specification is to be signed by representatives from each Subcontractor and submitted to Owner.

3.3.2.2 In addition to all of the pertinent safety regulations that apply to the portion of the work that the Subcontractor will perform, Contractor shall clearly state the expectation that safety management of its workers and sub-tier workers shall be the Subcontractor's responsibility and that failure to adequately manage safety could result in a demand for the removal and replacement of supervisors.

3.3.3 Project Safety Orientation Training – All Dedicated Project Workers

3.3.3.1 The PSC or PSA shall conduct formal training to every dedicated project worker who is to be allowed into the Construction Area(s) without an escort. This duty shall not be delegated. Unless the PSC and/or PSA are bi-lingual, a translator shall be present when there are workers in attendance who do not speak English. Workers and their immediate supervisors shall be required to attend a repetition of the orientation whenever observed behavior indicates a lack of understanding or repeated non-compliance of project safety requirements.

3.3.3.2 The PSC shall review the Safety Orientation Checklist (EXHIBIT D) and incorporate each applicable topic within the presentation**.** The PSC shall develop and administer a process to ensure and demonstrate worker understanding.

3.3.3.3 The PSC shall furnish a project-specific, photo-identification badge to each dedicated project worker who satisfactorily completes the Project Safety Orientation. The badge will indicate the worker's name, employer, job title, project name, and Owner project number. The badge must be visible at all times that the worker is on the Project and be located above the waist using clip or arm band. Lanyards are prohibited. Failure to maintain the badge will be grounds for removal from the Site. Operator qualifications for specific equipment that can be operated will be identified on the back of the worker's photo identification badge. ID badges shall not be issued to visitors.

3.3.3.4 The PSC shall confirm employer insurance requirements have been met and that all required documentation is on Site and has been reviewed and found acceptable prior to start of orientation. PSC shall confirm documented credentials for operators and SSR prior to start of orientation. The PSC shall maintain a Site access log to document each successful orientation and any reorientations. The log shall include Project critical information (name, employer, badge number and position).

3.3.4 Daily Job Hazard / Safety Analysis (JH/SA) Training

3.3.4.1 Prior to start of the work for each shift, the SSR shall conduct a meeting with all members of the work crew to explain how the work steps for the shift are to be accomplished. Explanation shall include a discussion of all the work activities that will be performed in the vicinity as well as the work that the crew is expected to accomplish. Explanation shall address all of the recognized risks associated with the task and the hazard controls to be installed or actions to be taken to eliminate or minimize the exposures. Actions to be taken in the event of an emergency shall also be included and documented.

3.3.4.2 **A daily JH/SA shall be produced to document this meeting. (Exhibit M –Mandatory)** It shall contain names and initials of all attendees, name of supervisor (SSR if same), a project

specific daily statement of task(s), and any special safety measures or actions that are required to assure elimination or minimization of risk. A copy of the JH/SA shall be reviewed in the field comparing planned and actual work and endorsed by the PSC or PSA prior to work activities and copies of any completed permits shall be clipped to the document. The supervisor's and workers' signatures on the JH/SA shall be understood to also mean a thorough communication of all anticipated hazards and controls has been provided to all workers. A copy of the JH/SA will be posted in the immediate work area (considered to be within 75 feet) until the daily activities are complete. The JH/SA shall be modified as work activities change, warranting additional review and communications to the affected workers throughout the shift. Modified JH/SA must be re-reviewed and endorsed by the PSC or PSA prior to work re-start.

3.3.4.3 Project team members (Owner, Contractor and Subcontractor) are expected to attend these JH/SA meetings as frequently as possible to reinforce the Project safety culture.

3.3.5 Project Weekly Subcontractor Safety Representatives Meeting

3.3.5.1 The PSC shall chair a weekly meeting with all SSR(s) to ensure that all are aware of the existing hazards and exposures that should be addressed with each crew. A written agenda (EXHIBIT E), attendance roster, and meeting minutes shall be prepared and maintained at the Site by the PSC.

3.3.5.2 This meeting shall be exclusively reserved for safety and hazard control issues. Attendance shall be required of all SSR(s) when their employer is actively conducting work operations on the Site. Project team members (Owner, Contractor and Subcontractor) are expected to attend these weekly meetings as frequently as possible to reinforce the Project safety culture.

3.3.6 Project Weekly Site Safety ("Tool Box Talk") Meeting

3.3.6.1 All workers on the Site, including site Project team members (Owner, Contractor and Subcontractor), shall attend a weekly safety Tool Box Talk, which shall be presented in English and all other languages that are natively spoken at the Site. The PSC or PSA may deliver each talk to the entire Site population or each SSR may deliver individual meetings to their specific trade and/or group. The PSC or PSA shall periodically participate and review individual meetings to ensure effectiveness. The PSC or PSA shall collect and maintain copies of all sign-in sheets for every meeting.

3.3.6.2 Meetings shall address appropriate topics for the current and future work operations and current Site conditions. In addition, the PSC or PSA shall communicate information regarding statewide safety results discussed during Monthly PSC Conference Calls, inspection results, and other project safety-related topics.

3.3.7 Periodic PSMP Review and Lessons Learned

Contractor shall work with Owner to use Lessons Learned to capture significant safety experiences and best practices over the course of the Work. Contractor will work with Owner to facilitate Lessons Learned at Substantial Completion and will work with Subcontractors to actively participate in Lessons Learned. Contractor shall develop and distribute any reports that detail

findings to Owner as requested. The PSC shall formally evaluate and update the project safety process and supporting documentation as construction activities dictate, or at least semi-annually to ensure effectiveness and continuous improvement. Modifications after each review shall be submitted to Owner for review and acceptance.

3.4 SAFETY INSPECTIONS

3.4.1 Daily SafetyNet Inspections

3.4.1.1 Project safety inspections shall be entered into SafetyNet. The OSR(s), Owner, PSC and PSA, shall all be recognized users of Owner's SafetyNet Program. Other persons such as Contractor's project management team and the SSRs are expected to participate in daily project inspections. Information entry into SafetyNet conducted by these individuals shall be through the PSC or PSA.

3.4.1.2 User participation shall include recording of all observations and conditions at the Site (via the program's menu-driven checklist). Additionally, the PSC shall review on-line reports and respond appropriately, detailing sustainable action(s) taken to correct the identified safety process deficiencies.

3.4.1.3 Each deficient safety observation shall be corrected or controlled immediately. The PSC shall be responsible for reviewing and ensuring proper closure of all unresolved ("open issues") observations. Owner shall concur prior to closure.

3.4.1.4 An OSR will conduct initial training for the PSC understanding and use of the SafetyNet Program. All subsequent training of PSA(s) shall be accomplished by the PSC.

3.4.1.5 At a minimum, a daily SafetyNet inspection shall be conducted by each PSC and PSA on Site during the shift. The daily inspection may only record a group of observations within a single work operation, but the accumulated inspections conducted by the PSC and PSA throughout each work week shall reflect a comprehensive report of all operations at the Site. Each inspection shall be entered into SafetyNet within twenty-four (24) hours of the inspection. All inspections for the current month must be entered into SafetyNet no later than the last day of that month.

3.4.1.6 When an OSR conducts an inspection, the PSC and/or PSA shall be available to join in during the walk around. Other Owner users will also require the PSC and/or PSA to participate in the inspections.

3.4.1.7 When the PSC or PSA conducts an inspection, at least one SSR shall join in for the portion of the inspection that addresses the Subcontractor's scope of Work.

3.4.2 Quarterly (documented) Inspection of Tools, Rigging, and Portable Equipment

3.4.2.1 In addition to the required daily equipment inspection by the user, the PSC shall facilitate a documented safety inspection each quarter. Contractor and each subcontractor of any tier shall produce and submit a document (EXHIBIT F) that addresses all tools, rigging, and portable equipment within the company's inventory on the Site. Documentation evidencing inspections shall be maintained by the PSC.

3.4.2.2 This inspection shall include, but not be limited to, the following: Fall Arrest / Restraint Equipment, Rigging, Manufactured Ladders, Job Built Ladders, Power Tools, Electrical Cords, Welding Leads, Hoses, First Aid Kits, AEDs, Atmosphere Monitoring Meters, and Ground Fault Circuit Interrupter devices. Personally-owned hand tools are exempt from this inspection procedure, but daily examinations of all portable items prior to start of work shift as prescribed by the equipment manufacturer and/or OSHA standards are not relaxed.

3.4.2.3 For every item that "passes" the quarterly inspection, the SSR must remove the previous quarter's color coding and affix the current quarter's color coding. The PSC shall establish a universal system for the placement of the color coding for each individual piece of equipment identified in Section 3.4.2.2 (i.e., male end of an extension cord, spreader bar on portable step ladder, etc.) Every item removed from service shall be repaired, replaced, destroyed or immediately removed from the Site. The inspection report shall reflect such actions. Inspection reports shall be completed by the SSR and submitted to the PSC prior to use of any new equipment on the Site and re-inspections before the first calendar day of the beginning of each quarter of the year. Quarterly re-inspections may begin and color coding may be changed anytime during the final one-week period of the previous quarter.

3.4.3 Initial and Annual Inspection of all Cranes and Motor Driven Equipment

3.4.3.1 The PSC shall ensure manufacturer required safety inspections and written certifications for all hoists, cranes, mobile equipment, motorized scissors and aerial lift platforms, motorized stage platforms, generators, and compressors are maintained on the Site.

3.4.3.2 The PSC shall ensure that all equipment inspections are consistent with the manufacturer's requirements. An initial inspection and certification of proper condition shall be transmitted to PSC before a piece of equipment is allowed to commence operations on the Site.

3.4.3.3 The PSC shall ensure all equipment is inspected annually and certified as required prior to initial use. Any equipment that leaves the Site and returns will require re-certification before it shall be allowed to resume operation at the Site.

3.4.4 Inspections by Regulatory Agencies

The PSC or PSA shall notify Owner immediately of the arrival at the Site by a representative of a Regulatory Agency (OSHA Compliance Officer, TCEQ Representative, Law Enforcement Officer, etc.), and provide the ODR with a copy of any published findings or citations issued to any employer, and shall ensure that statutory posting requirements are met. PSC shall provide Owner with a copy of any employer's response to the same findings or citations.

3.5 CONTRACTOR RECORDS, INVESTIGATIONS AND REPORTS

3.5.1 Mobile Equipment and Crane Operator Records

Consistent with the requirements of Section 2.10.2, each subcontractor of any tier shall submit to the PSC, for each operator, a record of training. The minimum amount of detail as applicable for the specific piece of equipment shall include the following:

3.5.1.1 Pre-start up inspection, travel path issues, and location/set up procedure;

3.5.1.2 Start up, operation, intended use, and shut down (normal and emergency);

3.5.1.3 Equipment Operations Manual, Limit Chart(s), Motor Plate information, equipment capacities and limitations, alarm features, safety stops, seat belts, roll over protection and preventive maintenance;

3.5.1.4 Any additional operational topics as indicated by the equipment manufacturer.

3.5.2 Contractor Monthly Safety Report

3.5.2.1 The PSC shall enter the following information directly into SafetyNet; total man hours by month, all OSHA recordable and days away from work incidents including descriptions and relevant fields, near misses, first aid rendered, and property and equipment damage. Data shall be entered into SafetyNet no later than the 10th of the month following the reporting period.

3.5.2.2 This information is vital to Owner's safety benchmarking efforts. Failure to submit the information in a timely manner may result in Owner withholding payment, or some portion thereof, and shall disqualify Contractor from consideration for safety recognition for the month of failure to submit as required.

3.5.3 Incident Notification, Investigation and Reporting Procedure

3.5.3.1 During the orientation, the PSC shall instruct all workers to immediately report every incident to their supervisor, even if there is no obvious injury or property damage. Supervisors shall immediately notify the PSC or PSA, who shall immediately notify the Owner of any incident. All Near Miss incidents, First Aid injuries, High Risk Safety Inspection Observations, and other such incidents as directed by Owner shall be entered into SafetyNet by the PSC. All incidents shall be investigated. The PSC shall lead the efforts and follow a structured incident investigation program. Contractor and involved subcontractors of each tier shall tailor the magnitude and depth of the investigation effort to correspond to the potential, rather than the actual outcome of the incident. Investigation team members shall include safety personnel, project management, line management, affected workers, and consultants as the circumstances dictate. Owner reserves the right to participate in any incident investigation. The PSC shall develop a Root Cause(s) Analysis report (Exhibit J) that summarizes the incident, identifies the underlying contributing factor(s), determines which process element(s) failed to control the incident, determines which process element(s) will be implemented or improved, and the time needed to take sustainable corrective action(s). PSC shall conduct and submit incident investigation report that supports the Root Cause(s) Analysis in the manner and time as directed by the ODR. Owner reserves the right to determine the acceptability of the findings. The PSC shall prepare and submit reports that will allow Owner and subcontractors of each tier to understand findings and any planned changes to the PSMP based on those findings.

3.5.3.2 Incident Responsibilities for Workers and Supervisors

3.5.3.2.1 The PSC or PSA shall cover the information in the Worker Responsibilities (EXHIBIT G) document during the orientation and keep copies to hand out to any worker who appears to have sustained an occupational injury.

3.5.3.2.2 The PSC or PSA shall cover the information in the Supervisor Responsibilities (EXHIBIT H) document during the orientation and keep copies to hand out to any supervisor who informs PSC or PSA that a worker injury has occurred.

3.5.4 Contractor Final Safety Report

3.5.4.1 The PSC shall work with all contributing subcontractors of each tier to prepare a Final Safety Report and shall forward to Owner no later than thirty (30) calendar days after Substantial Completion.

3.5.4.2 Report shall include at least the following items:

3.5.4.2.1 Summary of the PSMP with description of improvement initiatives undertaken during the course of the Project

3.5.4.2.2 Evaluation of the effectiveness of the PSMP, including summary results of assessments performed

3.5.4.2.3 Project safety performance results (leading and trailing indicator measures)

3.5.4.2.4 Project safety lessons learned and best practices

3.5.4.2.5 Summary of Project incidents

3.5.4.2.6 Evaluation of Contractor and all Subcontractors overall safety performance

3.5.5 Contractor shall provide additional reports as requested by Owner. This may include work force histograms, training documents, safety trending reports, etc.

3.5.6 The PSC shall notify Owner when a worker is removed from the project for a serious infraction, including any of the following reasons: refusal to take a post incident drug/alcohol screen or a positive result if taken, possession of a prohibited weapon on the Site or Owner's premises, criminal activity, use of equipment that jeopardizes the safety of any worker or visitor, or fighting on the Site or Owner's premises. Within forty-eight (48) hours of removal, the PSC shall provide Owner a brief report of finding(s) that resulted in the worker removal. Report must include the project name and location, the name of the removed worker, the legal name of the worker's employer, the date and time of the incident leading to the removal, and a brief summary of the facts justifying the removal.

3.6 CONSTRUCTION OPERATIONS

The following requirements are either in addition to or in the absence of federal and state regulations. Where conflicts exist, the most stringent directives shall apply.

3.6.1 Cranes

3.6.1.1 Tower cranes (including affiliated transformers and power supply equipment) shall be surrounded by at least a sixteen-foot (16') high, 5/8-inch plywood enclosure with a lock-controlled entrance.

3.6.1.2 Operators of cranes shall be trained in the specific make and model of crane and possess certification from a nationally accredited certifying organization.

3.6.1.3 Every crane and piece of hoisting equipment shall be equipped with an anti-two blocking sensor above each lifting block.

3.6.1.4 Unless the crane is equipped with sensors that inform the operator of the weight of the load on the hook and the current wind speed, these measurements shall be determined by other means before commencement of each lift.

3.6.1.5 When outriggers are used on cranes, they shall be fully extended. Float pads shall be landed onto leveled and properly designed and sized slabs or cribbing. Where steel plate is used for cribbing, welded or bolted cleats shall be attached to upper surface to prevent float pads from moving horizontally.

3.6.1.6 For cranes of up to and including 35-ton capacities, wooden cribbing shall be a minimum of four inches (4") in thickness. For cranes over 35-ton capacities and up to 150-ton capacities, cribbing shall be a minimum of eight inches (8") in thickness. For all cranes up to 150-ton capacity, the minimum size of the surface ("footprint") of the cribbing assembly shall be determined by the following formula: the capacity of the crane (in tons) divided by 5 equals the minimum square footage required. Properly sized circular crib pads are acceptable. Side dimensions for rectangular crib pads shall be equal to each other or differ by no more than one foot. For cranes larger than 150-ton capacities, a qualified person shall design the cribbing. "Sandwich" units of cribbing are allowed as long as the plywood on bottom and on top is at least one inch in thickness.

3.6.1.7 For "Pick and Move" operations, the pick shall be made directly in front of the crane with the boom as near vertical as possible. Move at walking speed with a "spotter" in front of the load and another behind the crane. Guy wire cables that secure the load to the body (to prevent lateral force loading of the boom) of the crane shall be required if the grade slope is more than three (3) degrees or the terrain is uneven. Only rubber-tired cranes shall be allowed to perform this operation without a "critical lift" plan and the load must be under fifty percent (50%) of the "on rubber" chart limit.

3.6.1.8 Critical Lifts shall include, but not be limited to: (1) Tandem Lifts, (2) Lifts greater than seventy-five (75%) percent of Load Chart, (3) Crane Suspended Personnel Hoists, (4) Non-Conventional Outrigger placements and (5) "Blind" picks and/or placements. All of these events shall require submittal of custom designed plans by qualified persons. The PSC is responsible for review and acceptance prior to planned lifts.

3.6.1.9 **Multiple lift operations ("Christmas Treeing") shall not be permitted.**

3.6.1.10 **All crane operators on rigs rated for more than five (5) tons of capacity shall submit to a physical examination prior to conducting any work on the Project and, if still on the Project, at least every twelve (12) months thereafter.** The physician's written declaration of fitness shall be submitted to and maintained by the PSC in the Project files.

3.6.1.11 Only the designated rigger and/or signal persons shall issue lift instructions to the operator. The only exception shall be an emergency stop signal, which may be delivered by anyone on the Project who knows how to alert the operator.

3.6.1.12 All loads lifted more than six feet (6') above ground elevation shall have a tag line attached that is long enough to allow control of load spin without placing any part of the body directly below the load. When "shake out" hooks are used, the load must never be elevated above five feet (5') over the surrounding surface and workers must stay at least five feet (5') horizontally away from the suspended load.

3.6.1.13 For any load that may be elevated and the travel path may impact any worker, a means for worker notification must be in place. The crane operator may perform this notification by horn if the load can be seen at all times. If the crane operator may lose sight of the load at any time, notification must be made by a designated individual who can maintain sight of the load. Notification must be accomplished by some means that attracts the attention of all workers and ensures that the workers are not directly below the load being moved.

3.6.1.14 **Any erection or dismantle of a tower crane will only be done while activities are monitored by a crane consultant provided by Owner. Prior to any operation, the tower crane erection/dismantle contractor shall provide a detailed plan for the work. Details of the plan must include at a minimum, all elements in Exhibit L, and the plan must be provided to Owner as required. Owner reserves the right to determine acceptability of the information provided. Submission of this plan in no way relieves Contractor from ensuring all documentation is provided, reviewed for accuracy based on the planned task(s), ensuring that the work is pre-planned and communicated to all affected workers, all workers are properly trained to perform their tasks, and that all work is done according to the agreed to plan. The PSC is responsible for the review and acceptance for Contractor.**

3.6.2 Demolition

3.6.2.1 Maintain clearly marked and well-illuminated egress paths at all times.

3.6.2.2 Maintain barricades and signage that isolates impacted areas to prevent entry by other trades and members of the public.

3.6.2.3 Removal of materials and trash from elevated locations must be controlled. Materials, scraps or waste shall never be allowed to free-fall from a height greater than ten feet (10'). Items that may be caught by wind and carried horizontally shall never be allowed to drop freely from any distance. If items are allowed to be dropped freely (unless as indicated previously), a person shall be stationed at the landing elevation at a safe distance to warn others away from the operation, and the landing area shall be surrounded by fence type barricade placed at least six feet (6') outside of the expected landing area. Wall openings that may be located

vertically between the material drop point and the expected landing area shall be securely covered and marked from inside. Anything that is to move downward at a distance greater than ten feet (10') or is capable of sailing horizontally shall be contained within a chute or controlled by hoist.

3.6.2.4 Unless the Contract documents clearly call for it, the use of explosives for demolition is prohibited.

3.6.3 Electrical Power

3.6.3.1 Ground Fault Circuit Interruption (GFCI) shall be the primary protection from exposure to electrical current for all workers on the Site. Only exit lighting and medium-high (greater than 240) voltage service will not be GFCI protected.

3.6.3.2 All strings of temporary lights shall be fully lamped and guarded regardless of height, and shall be continuously maintained. PSC shall ensure that illumination levels are periodically monitored and adequate for the expected work activities in those areas.

3.6.3.3 All receptacles and switches shall have trim plates installed before they are energized.

3.6.3.4 All power distribution panels shall have full covers installed before primary power is brought into the panel. When energized panels are located in open areas, covers shall be locked except when an authorized electrician is working in the immediate area. When panels are located inside separate rooms or closets, automatic closers and automatically locking hardware shall be installed on doors as soon as equipment is energized, and only authorized persons shall be provided a key. Doors shall not be modified to stay open. Warning signs shall be placed in conspicuous locations. Energized electrical rooms shall not be used for material storage or continuous personal occupancy. Locked electrical room or panel doors will not be considered to meet the requirements of a Lock Out / Tag Out program. The Lock Out / Tag Out program in use must ensure that any affected worker has the ability to confirm equipment being worked on has been de-energized, made safe, and has individual control of the locking device and tag used to control inadvertent startup of the equipment.

3.6.3.5 Contractor shall implement and document an overall safety program that directs activities appropriate for the electrical hazards, voltage, energy level, and circuit conditions anticipated.

3.6.3.6 Extension cords used must be a minimum of 12 gauge.

3.6.4 Excavations

3.6.4.1 **Any and all trenching operations that are four (4) feet or more in depth or could result in any worker's upper body being positioned below grade level shall adhere to the requirements of the UTUGCs.** In addition to UTUGC requirements, every excavation shall require a preliminary meeting with representatives as designated by Owner to determine historical knowledge of existing utilities. Where applicable, a phone call for utility "locates" shall be completed seventy-two (72) hours in advance. "Potholing" and/or hand digging shall

be required within three (3) horizontal feet of "located" centerlines, and in areas where knowledge is lacking.

3.6.4.2 The "toe" of spoil piles that are less than four feet (4') in height shall be at least two feet (2') from the edge of any excavation. Spoil piles greater than four feet (4') in height shall add one foot (1') of distance from the excavation for every additional foot in height. Spoils shall be managed to prevent airborne dust.

3.6.4.3 Trench and/or excavations are to be backfilled at the end of each shift as practicable.

3.6.4.3.1 When a trench or excavation cannot be backfilled in the same day that it is created, a highly visible fence type barricade shall be erected at a minimum distance of six feet (6') from all approachable edges. All portable means of access shall be removed at the end of each workday.

3.6.4.3.2 Earth ramps that are to be used for walking access shall not exceed twenty percent (20%) in grade slope. Steeper slopes shall be gate controlled for equipment only, and alternate access shall be added for pedestrian traffic.

3.6.5 Fall protection and prevention

3.6.5.1 **Any walking/working surface that is equal to or greater than six feet (6') above the surrounding area shall present an unacceptable fall exposure unless it has all edges (side and ends) protected by an attached guardrail system, fall arrest equipment, fall restraint equipment, fall capture netting, or is blocked off by an adjacent wall. An adjacent wall shall be continuous, structurally sound, and at least thirty-nine (39) vertical inches above the walking/working surface, and within eight (8) horizontal inches from the open edge.**

3.6.5.2 Contractor or a subcontractor at any tier that will create a fall exposure equal to or greater than six feet (6') shall submit a detailed plan and set of drawings in advance of the operation to indicate how the exposure shall be addressed. Contractor shall require the plan to contain either "engineered" or conventional fall protection measures for each and every exposure that involves vertical distances equal to or greater than six feet (6'). Any precautionary measure that would allow greater risk than that afforded by a guardrail system, fall restraint equipment, fall arrest equipment, or fall capture netting shall be prohibited. **The use of a "Monitor" is expressly prohibited.** The recognized exemptions/exceptions are as follows:

3.6.5.2.1 Allow work from portable step ladders as long as a "three point" contact is maintained, the ladder is properly positioned, secured from movement, the worker's center of gravity remains between the rails and in front of the feet, and the worker's waist does not extend above the top of the ladder. The height of the worker's feet is limited to twelve feet (12') above the supporting work surface for this exemption/exception.

3.6.5.2.2 Allow work from an extension or straight ladder if the ladder is properly positioned, secured from movement, "three point" contact is maintained, the worker's center of gravity remains between the rails and in front of the feet, and

the worker's waist does not extend above the top of the ladder. The height of the worker's feet is limited to twelve feet (12') above the supporting work surface for this exemption/exception.

3.6.5.2.3 **The use of a warning line system is prohibited unless all other means of fall protection have been demonstrated to be infeasible. If infeasibility is demonstrated to the satisfaction of the PSC and Owner, work may be performed without fall arrest measures while standing on an elevated walking/working surface only if maintaining a distance of at least fifteen (15) horizontal feet from the edge. The unprotected edge shall be clearly identified by posted signage and a warning line erected continuously at a fifteen-foot (15') setback distance.**

3.6.5.2.4 When work is to be performed from a ladder placed near a guardrail system and the ladder can fall toward the leading edge, the safe distance from an unprotected edge shall increase one foot (1') horizontally for each vertical foot that a worker climbs above the surrounding surface. This requirement shall also apply to a ladder that is being placed beside a protected edge. Any leading edge ("controlled access") zone work shall require fall protection arrangements prior to entry.

3.6.5.3 Covers placed over pier holes, and roof or floor openings shall be physically secured and clearly marked with warning message "HOLE COVER - DO NOT REMOVE." Any cover that is too small for legible wording shall be bright orange or red.

3.6.5.4 Job built ramps and bridges shall be surfaced with an abrasive (non-skid) material. Ramps shall comply with ADA slope requirements.

3.6.5.5 Equipment and work operations of any description shall not be permitted to be performed directly above a worker unless adequate overhead protection is provided prior to commencement of the operation.

3.6.5.6 Each subcontractor of any tier that utilizes fall protection equipment in the course of its work shall provide for prompt rescue of a worker in the event of a fall or shall ensure that a worker is able to self–rescue. Specific plans for rescue of workers shall be developed prior to initiating work requiring the use of a personal fall arrest system. The fall protection plan, along with details for self-rescue as needed, shall be submitted to the PSC for review prior to work start.

3.6.6 Fire Protection

3.6.6.1 All floors that have combustible materials present shall be accessible from ground level by a usable stair system (temporary or permanent). For structures greater than three (3) stories in height, fire sprinkler standpipes shall be completed and charged to within two (2) stories, or thirty (30) vertical feet of all floors containing combustible materials. Siamese connection shall be installed at every level to provide access for fire hoses. All fire extinguishers that are not task-specific shall be adequate in number and description to comply with OSHA declared limits for egress points, floor area and travel distances. In multistory buildings, at least one fire extinguisher rated no less than 2A shall be located adjacent to each stairway on

each floor. They shall be situated in highly visible locations mounted at a height to facilitate ease of inspection and retrieval for use. All fire extinguishers shall be inspected monthly. Inspections tags shall be attached to each extinguisher and initialed by the inspector after each inspection.

3.6.6.2 All fire extinguishers that are task specific shall be inspected and furnished in advance by the employer that will be conducting the work requiring such firefighting provisions. All work that includes burning, welding, or spark producing of any type shall be defined as "hot work" and shall require the presence of a fire extinguisher, at least one fire watch, and a Hot Work Permit. Fire extinguisher(s) used for "Hot Work" shall be placed within sight of but no more than twenty-five feet (25') from the perimeter of the task operation and must be of proper size and type for the activity, fully charged, and inspected prior to use. Extinguisher location must be kept clear and accessible at all times during use. Fire extinguishers in use for general project protection shall not be used for this purpose. Refer to WELDING AND BURNING for additional details.

3.6.6.3 No more than twenty-five (25) gallons per floor, of flammable or combustible liquids shall be stored in a room outside of an approved storage cabinet.

3.6.6.4 Only UL approved metal fuel containers with flame arrestor and self-closing spout shall be allowed on Site.

3.6.6.5 Any liquid storage container larger than twenty - five (25) gallons shall be provided with its own secondary containment. Containment must be properly sized and maintained for effectiveness.

3.6.7 Housekeeping

The PSC or PSA shall ensure that Contractor and all Subcontractors "effectively" clean the Site continuously throughout each workday. "Effective clean-up" shall daily address all of the following housekeeping issues:

3.6.7.1 All construction waste, trash, and debris shall be placed in designated receptacles. Glass bottles shall not be permitted on the Site.

3.6.7.2 Stack (or restack) all whole and scrap materials in locations that shall not obstruct a clear pathway nor create a risk for toppling onto a person passing through the area.

3.6.7.3 Place all hoses, cords, cables and wires in locations that prevent them from being damaged by equipment, sharp edges or pinch points and from creating tripping hazards.

3.6.7.4 Secure and effectively cover all materials on roofs or elevated levels that may be displaced by wind or damaged by driving rain or standing water.

3.6.7.5 Restore all signs, barricades, fire extinguishers, guardrails, gates, etc. to proper locations and sound condition.

3.6.7.6 Properly store and secure all flammable and combustible liquids and gases.

3.6.7.7 Collect and place all cut-off or waste pieces of rolling stock, as they are created, into waste or scrap containers.

3.6.7.8 Live rounds that have been ejected from powder-actuated tools shall be immediately placed in designated containers and properly disposed of as recommended by the manufacturer.

3.6.7.9 All puncture and impalement exposures shall be covered or eliminated as soon as they are created. As per ANSI specification, effective covers shall be designed to prevent impalement of a 250-pound body being dropped from a fall of four feet (4').

3.6.7.10 All aisles, exits, and other parts of the means of egress shall be properly maintained and free of stored material and/or waste at all times.

3.6.8 Ladders

3.6.8.1 **Until such time that two (2) usable stairways are in place, every elevated platform (slab, deck or work surface) shall have at least two (2) remote (considered to be on opposite ends of the work level) ladders for access/egress when the platform is populated by more than three (3) persons. As the population rises above twenty-five (25), additional means of independent access/egress shall be required. A double-cleated ladder may only serve as one (1) independent means of access/egress.**

3.6.8.2 **At the end of each workday, ground access to elevated levels shall be eliminated. This shall be accomplished by removal and storage of all portable and job-built ladders, or installation of a lockable shield that prevents use of the lower rungs.**

3.6.8.3 Portable aluminum ladders shall be prohibited.

3.6.8.4 Extension ladders, straight ladders and job-built ladders shall be secured from movement at the top and the bottom.

3.6.8.5 Physical barricade offset that forces at least one change in walking path direction shall be constructed within a six-foot (6') radius around the upper access points for any ladder's step off landing area. If space does not allow this required offset barricade, another type of physical barricade must be provided at the ladder's step off landing area.

3.6.8.6 All elevated landings shall include a rope hoist (manual or motorized) near the ladder's upper-most access point.

3.6.8.7 Minimum acceptable manufactured step or extension ladder that can be used is an ANSI heavy-duty rating Type IA. All ladders must be inspected daily for condition and set up. All manufacturer installed labels must be maintained in legible condition on all ladders. All ladders must be marked in such a way as to identify the owner.

3.6.9 Medical Assistance and Screening

3.6.9.1 The PSC shall maintain a First Aid Log for all treatment administered on the Project (including any that might later escalate). Each SSR shall report and record details daily.

3.6.9.2 The PSC or PSA and SSR shall transport or accompany any injured worker for initial off-site medical treatment.

3.6.9.3 Drug and Alcohol Screening shall be mandatory for every supervisor and/or worker who sustains or contributes to any incident that involves property damage, worker injury or as directed by Owner. If impairment or poor judgment appears to be involved in a first aid event, PSC shall direct injured employee to be screened for probable cause.

3.6.9.4 **Minimum requirements for drug screening shall at least match the threshold limits for the NIDA 5-panel protocol and alcohol screening shall at least match the Texas DOT vehicle operator's limit for blood alcohol content. Only negative results are acceptable for employment on the Project. Evidence that testing was performed as required shall be by a letter provided by the employer that includes: name of employer and representative, date of testing, name of testing organization, testing criteria that meets or exceeds the above noted levels, name of each worker tested, and results (positive or negative as appropriate).**

3.6.9.5 Screening shall be initiated as soon as possible, but not later than two (2) hours after the incident occurrence. No matter where the worker receives medical treatment, a post incident drug and alcohol test MUST occur at the Project assigned clinic. Any worker's refusal to submit to screening shall be treated in the same manner as a "positive" finding. Any worker who withholds notification of an incident for longer than one (1) hour after the alleged event shall be evaluated by the PSC or PSA, and if declared to be negligent shall be permanently removed from the Project.

3.6.10 Motorized Equipment Operation

3.6.10.1 Where possible, equipment operator cabs shall be locked during non-working hours. Only equipment operators and direct supervisors shall have access to keys.

3.6.10.2 No combustion engine equipment shall be operated in enclosed spaces unless the exhaust is piped to outside air, and "fresh" air is brought into the space to replace the amount being consumed. The PSC shall be responsible for monitoring air quality on the Project when combustible engine equipment is used. This includes generators, welding machines, and compressors as well as mobile equipment.

3.6.10.3 For hose and termination fittings on air compressors, "whip checks" shall be used at all connection points. Emergency automatic shut off valves shall be installed on every discharge fitting of all air compressors that are capable of producing air pressure greater than thirty (30) pounds per square inch.

3.6.10.4 Any equipment that operates by rotating such that a worker can possibly be exposed to a caught between hazard must have the swing radius barricaded to prevent worker entry.

3.6.10.5 Only company vehicles with evidenced company provided insurance are allowed in the Construction Area while on the project. Parking is only allowed in Contractor's designated parking area(s).

3.6.10.6 Accessories for all mobile equipment (blades, buckets, forks, etc.) shall be placed in the down position, ignition off, parking brake engaged, and keys removed when the equipment is parked and the operator is no longer on the equipment.

3.6.10.7 If a forklift, crane, or other such mobile lift and carry equipment is being used in an area where the public may be present or in a congested project area where the operator's view may be obstructed, flaggers/spotters will be required as determined by the PSC or PSA.

3.6.11 Public Protection

3.6.11.1 The project boundary perimeter shall be secured from public intrusion by fencing and locked gates.

3.6.11.2 "Attractive nuisance" items such as tower cranes, tall ladders, fire escapes, large excavations, etc. shall require additional and separate security measures.

3.6.11.3 No visitor or member of the public shall enter a Construction Area without an authorized escort.

3.6.11.4 All visitors to the Site must abide by all applicable project safety requirements. Visitors must read and sign the Visitor's General Waiver and Release (Exhibit C) prior to entry to the Construction Area(s).

3.6.11.5 Contractor shall be authorized to contact campus police to remove anyone who refuses to abide by Contractor directive to leave the Construction Area. Owner shall be notified immediately should this occur.

3.6.12 Sanitary Facilities

3.6.12.1 Contractor shall provide at least one (1) toilet facility per twelve (12) workers (separate count per gender) at the Site; and shall pump, clean and re-supply at least once per week to maintain sanitary conditions. When average temperatures during daylight hours exceed 85 degrees, pump outs shall occur at least twice per week. When female workers are present at the Site, toilets designed and designated for their exclusive use shall be clearly marked. Toilets located in project management office trailers and used by office support staff shall not be considered to meet this requirement unless by written consent of Owner.

3.6.12.2 On all projects that are four (4) stories in height or greater, sanitary facilities shall be furnished on ground level and every third level (maximum 45 vertical feet).

3.6.12.3 Contractor shall provide and maintain hand washing and sanitizing facilities sufficient in numbers and locations as to support the toilet facilities indicated in Section 3.6.12.1 and 3.6.12.2.

3.6.12.4 The use of any Owner toilet facility is strictly prohibited unless by written consent of Owner.

3.6.13 Scaffolding

3.6.13.1 Each ground-supported scaffold shall bear a shift inspection tag (initialed and dated by the competent person for each subcontractor of any tier that requires use of the scaffold) to indicate the status of the scaffold (green tag means completely safe and red tag means specific precautions required, or not safe/do not use). For suspended scaffold, inspection tags shall also be placed on the outriggers as well as the work platform. The PSC shall purchase and control a universal system to be used by all subcontractors at the Site. Training with supporting documentation shall be required for all workers on the Project who will climb onto any kind of scaffolding. The PSC shall furnish tags, and ensure that all applicable workers understand the procedure. This requirement shall apply to all scaffolds.

3.6.13.2 Mudsills and surrounding areas at the base of ground-supported scaffolds shall be maintained in a well-dressed and level condition. Scaffold foot plates (or casters) shall be installed on the legs of all ground level frame sections and shall be visible for inspection at all times. Diagonal braces shall be included in every scaffold section as is practically possible. Every walking/working level shall be fully planked and kick-off protection shall be included along open sides and ends. Overhead protection shall be constructed where walk-though passages are allowed. Mudsills shall be at least 2”x12” in one-foot lengths with foot place centered and nailed in two corners.

3.6.13.3 Brakes on rolling scaffolds shall be secure at all times, except when the scaffold is being moved. Workers shall not be allowed on the platform when a scaffold is being moved. Rolling scaffolds should be used on solid, unobstructed, and flat floor surfaces only.

3.6.13.4 **Workers in any type of aerial lift including man lift or scissor lift shall be provided with a means to be secured (restraint or maximum 6 ft. SRL) to the lift so that movement is limited to the floor of an elevated lift. No worker shall be allowed to stand on the toe board or rail of the lift. No lift shall be modified to allow the operator to stand above the floor. No worker shall be allowed to exit an elevated lift.**

3.6.13.5 Stilts shall be inspected daily by the equipment user and maintained properly. Surfaces on which stilts will be used must be dry, flat, and free of pits, holes and obstructions such as debris, as well as other slip, trip and fall hazards. When a worker is using stilts in an area where a guardrail system is used for fall protection, the guardrail system must be increased in height by an amount equal to or greater than the height of the stilts being used. **A rigid platform at a height equal to or greater than the height of the stilts shall be used for mounting/dismounting stilts. The platform must be wide and deep enough to sit comfortably, be stable, and be secured from movement while in use. The platform must be kept clear, accessible, and within the immediate work area (considered to be within 75 ft.) while stilts are in use. Stepladders or makeshift platforms cannot be used for this requirement.**

3.6.14 Stairs

3.6.14.1 Properly designed and built stair and landing units shall be placed at access doors for every Project office and storage trailer prior to use. Per ANSI requirements, the landing outside each door of any office trailer shall be no greater than one quarter inch (1/4") below the threshold and the unobstructed (standing) area outside the swing radius shall be no less than twenty-two inches (22"). Fire and Life Safety Code (NFPA) and ADA requirements shall also be satisfied as they apply. Ramps or connecting decks may be installed to satisfy this requirement.

3.6.14.2 For incomplete permanent stair sections, at least the bottom four (4) risers and upper entry points for each floor shall be physically blocked with a hard barricade and marked "INCOMPLETE – DO NOT USE." Until a complete section is made acceptable for general use, the barricades and signs for that section shall be maintained. Once permanent stairs are put into service for general use, no less than two (2) stairs must be maintained as open and accessible from the uppermost floor to ground level at all times. To be considered usable, all treads and landings must be filled to the top of the pan and handrails must be in place. If any previously available stair(s) will be blocked during the workday, all impacted workers must be notified and the alternate means of access/egress communicated prior to that day's work start.

3.6.15 Project Service Water

3.6.15.1 Potable Water: Potable water shall comply with city and community health requirements.

3.6.15.2 Non-potable Water: Water storage containers, hose bibs and faucets shall be posted in English and Spanish "DANGER – DO NOT DRINK or WASH."

3.6.16 Welding and Burning

3.6.16.1 Splices, taps, welds and/or burning operations that may produce sparks, slag or hot scraps shall require "Hot-Work" or "Burn" Permits (daily or per shift). "Burn Permit" shall be issued by the PSC. The SSR shall submit completed permit in advance of the work to the PSC for acceptance. One copy of the accepted permit shall be posted by the SSR in the immediate area of the operation. At the conclusion of the work and successful completion of the smolder/re-kindle watch, a copy of the expended permit shall be signed off and returned to and filed by the PSC. If Owner wishes to be involved in the process (provision of permit and/or pre-inspection of the permit space), Contractor shall accommodate these wishes. The PSC will also issue work-specific permits daily or per shift. The PSC shall ensure that all Hot Work will be provided with at least a fire watcher(s), fire extinguisher(s), and proper spark, slag, or hot scrap containment measures. If the work produces intense light, permit shall also contain requirement for screens to protect others from flash burns.

3.6.16.2 Oxygen and fuel gas cylinders shall not be stored together, including on bottle carts, but shall be separated by at least twenty (20) feet and properly secured from movement. At the end of any cutting operation and/or any shift, bottles must be removed from carts. Hoses and gauges shall be removed and caps restored onto cylinders.

3.6.16.3 Anti-flashback arrestors shall be installed at the pressure regulator gauges of all Oxy-Acetylene cutting rigs, even if the torch is equipped with a built-in arrestor.

3.6.16.4 Fire watcher(s) shall be posted at every operation that produces sparks, flames or sufficient heat to create an ignition or to fall onto another level. If multiple activities are no more than twenty (20) feet apart and all activities can be seen at all times, a single fire watch can be utilized. This allowance must be noted on the Hot Work permit. All fire watchers shall be trained in the use of extinguishers, shall keep other people from entering exposure areas, and shall not be assigned other duties until the rekindling possibility ("smolder/re-kindle watch") is over. When sparks, slag, or fire cannot be controlled at the source and may fall to a different level, a separate fire watch shall monitor each level directly below the work (including exterior locations).

3.6.16.5 Heater boxes for welding electrodes shall have a manufacturer's label that certifies the purpose of the unit. Job-built heaters shall be prohibited.

3.6.16.6 The unused stubs of welding electrodes ("rod butts") shall be collected and placed in proper disposal containers (i.e. metal bucket with sand or water) as soon as each one is expended. Whenever operation is idle, electrode shall be removed from stinger.

3.6.16.7 Welding operations shall not be allowed to present an opportunity for flash burn exposures to the eyes of any workers in the vicinity. All welding operations shall provide appropriate screening measures, erected in advance to contain the high energy light.

3.7 REQUEST FOR SAFETY VARIANCE

If the Project conditions present a situation that will not allow compliance with any portion of this Section, Contractor shall submit a Request for Safety Variance (EXHIBIT I) to Owner. The Request for Safety Variance must provide sufficient detail(s) regarding the action(s) to be taken that will provide a measure of safety that is equal to or exceeds the stated requirement. Until the variance is approved and signed by the ODR, compliance with this Section is required.

LIST OF EXHIBITS:

- EXHIBIT A Anticipated Construction Project Hazards – Checklist submittal
- EXHIBIT B Hot Work Burning/Welding Permit – Project file document
- EXHIBIT C Visitor's General Waiver and Release – Contractor submittal
- EXHIBIT D Project Safety Orientation Checklist – Project file document
- EXHIBIT E Subcontractor Safety Representatives Weekly Meeting Agenda - Template
- EXHIBIT F Quarterly Equipment Inspection Report – Project file document
- EXHIBIT G Worker Guide for Reporting Injury - Handout
- EXHIBIT H Supervisor Guide for Management of Worker Injury - Handout
- EXHIBIT I Request for Safety Variance – Contractor submittal
- EXHIBIT J Root Cause Analysis
- EXHIBIT K Incident Notification Flow Chart
- EXHIBIT L Tower Crane Assembly/Disassembly Documentation
- EXHIBIT M Job Hazard Analysis Form (Mandatory)
- EXHIBIT N Safety Specification 01 35 23 Contractor Acknowledgement Statement

END OF SECTION 01 35 23

[BALANCE OF PAGE INTENTIONALL LEFT BLANK. EXHIBITS BEGIN ON FOLLOWING PAGE.]

EXHIBIT A	CONTRACTOR SUBMITTAL TO OWNER – CHECKLIST

The University of Texas System – Construction Project Safety

ANTICIPATED CONSTRUCTION PROJECT HAZARDS

CIP (Owner's Project) #	Project Name	Date

No	Yes	Issue	Timing for appearances & ID for Subcontractor JH/SA's
		General Health Exposures	
		Noise, Illumination, Lasers and X-ray	
		Dusts, Mists, Vapors, Gases	
		Chemical exposures	
		Proximity to public and/or traffic	
		Existing geography/ extreme weather	
		Electrical Exposures	
		Overhead power lines in area	
		High Voltage (∃ 600 volts)	
		Hot taps and/or Double fed circuits	
		Excavations	
		Tunnels and/or Jack and Bore	
		Maximum estimated trench depth	
		Maximum estimated pier sizes	
		Existing underground services	
		Proximity to streets or buildings	
		Elevated Fall Exposures	
		Excavations and piers	
		Structural erection (steel/precast)	
		Building exterior	

		Stairwell/ Chase/Elevator Shaft	
		Roof (note steep or low slope)	

Cranes/ Hoists/ Derricks			
		Pier Drilling/ Pile Driving	
		Exterior Hoists (Elevators)	
		Mobile Cranes (track and rubber tire)	
		Tower Cranes	
		Critical lifts	
Tools and Equipment			
		Powder Actuated	
		Pneumatics or High Torque power tools	
		Generators and Compressors	
Motor-Driven Equipment			
		Earth moving equipment	
		Lift Platforms (articulating and/or scissor)	
		Industrial trucks (fork lifts)	
		Bulk fuel storage area	
Demolition			
		Structural, Explosive or Mechanical	
		Jackhammers and power cutting	
Scaffolding			
		Ground supported (static and/or motorized)	
		Suspended	
Welding and Burning			
		Types and Locations	
Confined Space			

		Permit required and/or not required	

EXHIBIT B **CONTRACTOR DECISION MATRIX – GUIDELINE**

The University of Texas System – Construction Project Safety

HOT WORK (BURNING/WELDING) PERMIT
(ONE COPY MUST BE POSTED IN THE VICINITY OF THE WORK)

CIP Number		Request Date:
UT Campus / Institution		
Project Name		
Requesting Company		
Responsible Supervisor		
Work Location		
General Description of Work Tasks		

ISSUES AND/OR PREVENTION MEASURES	**DESCRIPTION**
Dedicated Fire Extinguisher(s)	
Special Suppression Equipment	
Fire Blankets/Equipment Shielding	
Flash Burn (Eye Safety) Screening	
Fire Watch Position(s)	
Existing Sprinklers Disabled	
OTHER CONSIDERATIONS:	

NOTES:

1. All permits are good for one (1) shift only.
2. Unless a specific task requires a **LONGER** time period, fire watch positions must also conduct a smolder-rekindle watch for at least THIRTY (30) MINUTES after the burning/welding operation is completed.
3. If the work moves from one area to another during a single shift, the permit must accompany the move and all task areas must be identified on the permit.
4. After the work is completed, the permit must be initialed by the RESPONSIBLE SUPERVISOR (below) and a copy must then be forwarded to the Prime (Controlling) Contractor within one (1) work day.

If unexpected events during the work led to modified plan, place initials in appropriate box: ☐ **NO** ☐ **YES** If **YES**, describe the unexpected events and the subsequent actions.

EXHIBIT C	CONTRACTOR PROCEDURE – GUIDELINE

Visitor's General Waiver and Release
The University of Texas System (Owner)

Project Name: _____

Project Number: _____ Location: _____

General Contractor:_____

OFPC Resident Construction Manager: _____

Project Safety Coordinator_____

On behalf of The University of Texas (Owner) and the General Contractor, we welcome you to the project. Construction projects can be dangerous and hazardous to employees and visitors alike. Upon entering the Site, you must exercise extra care to adhere to safety protocols and instructions from knowledgeable construction professionals.

Initials _____ I acknowledge that I will observe and follow all safety procedures, including any warning signs or safety instructions posted on or about the premises. In addition, I acknowledge that proper safety vests, hard hats and safety glasses have been provided to me for my visit. I am wearing closed toed shoes that the Project Safety Coordinator has acknowledged will be appropriate for my visitation.

Initials _____ I hereby waive, release and hold harmless, as well as forever discharge, The University of Texas System, the General Contractor and all subcontractors, their agents and employees from all claims which I, or my heirs, executors or administrators shall or may have, because of bodily injury or death to me or damage to my property resulting from any act or omission of the Released Parties. I AM NOT AGREEING, HOWEVER, TO RELEASE THE RELEASED PARTIES FROM GROSS NEGLIGENCE.

Initials: _____ I hereby agree to indemnify, defend and hold harmless the Released Parties for any bodily injury, death or damage to other persons or property caused by my acts or omissions while visiting the project.

Initials: _____ I, the undersigned, acknowledge that I (1) have requested permission from Owner and General Contractor to visit the Site; 2) have executed this Waiver and Release as a condition of and in consideration for being permitted by Owner and General Contractor to visit the Site; and 3) agree to exercise extreme care while on the Site and to comply with all safety rules and requirements of Owner and General Contractor.

Date: _____ Visitor Signature:_____

Number in Visiting Party: _____ Group Affiliation: _____

Project Safety Coordinator Signature: _____

EXHIBIT D	CONTRACTOR CHECKLIST – TRAINING DOCUMENT

The University of Texas System – Construction Project Safety

PROJECT SAFETY ORIENTATION	
OFPC Project #:	Date of Safety Orientation Training:
OFPC Project Name:	
Trainer's Name:	
Contractor/Employer's Company Name:	

INSTRUCTIONS: *Place a ☑ mark in the box to the right of each topic as it is discussed.*

1-	Review General Purpose of Rules			7-	Daily Issues		
	a.	Do NOT work alone – stay in contact			a	Housekeeping	
2-	Personal Protective Equipment (PPE)			ITEM		Slippery surfaces and Trip hazards	
	Purpose, use, storage and care of:			ITEM		Visual obstructions to emergency equipment	
	a	Safety Helmets (Hard Hats)		ITEM		Blocked Exit paths	
	b	Basic Eye Protection		ITEM		Emergency Roadways	
	c	Additional Eye/Face Protection		ITEM		Trash = Vermin/Fire hazards	
	d	Feet/Hands/Clothing Protection		ITEM		Puncture/Impalement hazards	
	e	Respiratory Protection		ITEM		Unstable Stacks of materials	
	f	Hearing Protection			b	Manual Lifting	
	g	Fall Protection			c	Ladders and Stairs	
	h	Special Protection issues			d	Scaffolding (frame and suspended)	
3-	Hazard Communication (aka Right to Know)				e	Tools and Portable equipment	
	a	General Plan			f	GFCI/Electrical power	
	b	Major Chemical hazards on-site:			g	Surface and ground conditions	
NAME					h	Overhead exposures	

NAME				8-	Motorized Equipment Operations		
NAME					a	Mobile equipment (uses and alarms)	
NAME					b	Crane and Rigging Operations	
	c	Hazard Labels			c	Lift platform equipment	
	d	Safety Data Sheet (SDS)			d	Hoists/ Exterior Elevators	
	e	Location of SDS			e	Company/ Personal Vehicles	
	f	Safe Task Training requirements		9-	Special Operations (with and w/out permit)		
4-	Emergency Equipment (location and use)				a	Excavations	
	a	First Aid Station and AED			b	Concrete pour and place	
	b	Fire Extinguisher			c	Steel and Precast erection	
	c	Eye Wash/Shower Stations			d	Decking and roofing	
5-	Emergency Procedures				e	Lock/Tag out of Energized Systems	
	a	Medical/ Injury incident			f	Hot work and Burn Permits	
	b	Fire incident			g	Scaffold erection/dismantle and use	
	c	Weather/ Evacuate			h	Critical shutdown	
	d	Violence, Protest, Spill, Explosion		10-	Miscellaneous Issues		
6-	Incident Notification/Reporting				a	Parking, Smoking, Harassment	
	a	Tell Supervisor Immediately			b	Signs, Barricades, Handrails	
	b	Help –OR- stay out of the way			c	Traffic, Pedestrians, Neighbors	
	c	Give a statement of facts			d	Drugs and Alcohol	
	d	Assist investigation			e	Meetings, Badges, Incentives	
	e	Report Unsafe acts and conditions			f	Enforcement	

I understand that this training is designed to help me make safe decisions and act to reduce risks.

Employee Name (print) _____ Employee Signature _____

EXHIBIT E **CONTRACTOR TEMPLATE – FILE DOCUMENT**

The University of Texas System – Construction Project Safety

SAFETY REPRESENTATIVES WEEKLY MEETING AGENDA

- Sign in and introduction of any new Subcontractor Safety Representatives
- Read minutes from last meeting and vote final adjustments before filing into record

Past (Old Business):

1. Discuss investigations (findings and conclusions) from recent past incidents.

2. If the Project has a safety committee, have someone from the committee report the safety conditions and behaviors noted in the past week.

3. Review safety issues/conditions identified during Project Safety Coordinator's weekly safety inspection or third-party inspection.

4. Discuss any pending claims (worker injury or general liability). Review claims handling procedures.

5. Discuss trends identified regarding claims or safety performance.

Present (Current and New Business):

6. Review the activities for the week ahead. Identify particular safety concerns and issues. Develop actions to control identified hazards.

7. Review any SDS for potential exposure warnings that pertain to upcoming operations.

8. Review specific PSMP elements and/or requirements.

9. Safety suggestions.

10. Open forum for general Q and A.

11. Announcements

- Subcontracts that are concluding – need final look at their areas
- Upcoming safety recognition events
- Upcoming training opportunities
- Upcoming professional safety seminars or workshops
- Names of workers who are not permitted to return to Project
- Time and date of next meeting
- Next week's mandatory topic for the Weekly Tool Box talk

EXHIBIT F SUBCONTRACTOR SUBMITTAL – FILE DOCUMENT

The University of Texas System – Construction Project Safety

QUARTERLY EQUIPMENT INSPECTION REPORT

Quarterly Color Codes:	**(1st) White**	**(2nd) Green**	**(3rd) Red**	**(4th) Orange**
Project Number		**Date of Report**		
Project Name				
Contractor				
Employer Name				
Inspector's Name				

INSTRUCTIONS:	Insulation intact and cords undamaged	Clean, no electrical shorts, good polarity	Labels in place and legible	All parts present and undamaged	No excessive wear or corrosion	No deformity or sign of excessive strain	Safety feature(s) intact and working	Warning alarms operating properly
1. Use one line to identify each type of portable equipment on Project.								
2. Use a "check" mark to indicate pertinent categories for each line item.								
3. Use an "N/A" mark to indicate non-applicable categories for each line item.								
4. Use "Qty." column to indicate total number for each item inspected.								
5. Use "Comments" area to describe items removed for repair and/or discarded.								

6. Complete this process within final fourteen (14) calendar days of each quarter.									
7. Items that enter or return to Project during quarter must first be re-inspected.									
Portable Equipment Items	**Qty.**	**Inspection Categories**							
Comments:									

I certify that all of the portable items on this Project at the beginning of this quarter have been inspected and certified or removed from service.

Signature of Inspector

Date of Report

Distribution: Employer's Project file ☐ Contractor's Project file ☐

EXHIBIT G **CONTRACTOR INFORMATION – WORKER HANDOUT**

The University of Texas System – Construction Project Safety

WORKER GUIDE FOR REPORTING INJURY

- **WORKERS MUST IMMEDIATELY REPORT** all injuries (no matter how minor) to a supervisor.
- The supervisor will report the incident to Contractor and take care of all paperwork.
- The worker's SSR will drive the injured employee to the clinic to guarantee safe transport and to secure swift and complete medical attention.

- The doctor may prescribe written "orders" for medical restrictions. The supervisor must then assign temporary duties that fit the restrictions ("Light Duty"). This guarantees the worker a full paycheck while the injury heals.

- The worker's SSR will drive the injured worker back to the Project and make arrangements with the employer to get the worker and personal vehicle home by a safe method.

- Injured employees must follow the doctor's "orders" and comply with work restrictions – **at home and at work**. Employers must allow reasonable times for visits to the doctor and to therapy sessions. Normally, sessions can be scheduled during non-work hours.

- The insurance company may contact the injured employee to discover how the doctor and the employer are planning to treat the injury and the recovery. Injured workers should share any personal details that might help the agent understand the situation. If anything needs to be changed in order to help the recovery process, the agent will contact the proper people to make it happen.

- The insurance company will pay the medical bills for injuries on this Project. Workers should never pay any medical bills for an injury that is related to work. If there are any questions, talk to a supervisor and/or the Project Safety Coordinator for Contractor.

SPECIAL WARNING TO USERS AND ABUSERS (of alcohol and other controlled substances):
No matter where a worker receives medical care, the treatment will include a drug and alcohol test. Workers who are injured as a result of impairment from alcohol or non-prescribed drugs will lose the guarantee that all medical treatment will be covered by insurance. Also, they will not be allowed to return to work on any UT System Project.

EXHIBIT H CONTRACTOR INFORMATION – SUPERVISOR HANDOUT

The University of Texas System – Construction Project Safety

SUPERVISOR GUIDE FOR MANAGEMENT OF WORKER INJURY

1. Workers must **IMMEDIATELY REPORT** all injuries (no matter how minor they appear at the time of the incident) to a supervisor (foreman, general foreman, superintendent, etc.).

2. The supervisor must **IMMEDIATELY REPORT** any injury to Contractor's Project Superintendent or Safety Coordinator. Improper and/or late reporting of injuries will result in Owner directed recovery charges as described in the Contract.

3. The supervisor must then escort the injured employee to Contractor's Project office (**except when the injury requires an ambulance or emergency response**).

4. Contractor's Project Safety Coordinator (PSC) shall retrieve 5 documents from the Project Safety Files as follows:
   a. The form (Authorization for Medical Treatment) that guarantees quickest medical response at the clinic b. A map that shows the best route to the clinic
   c. A copy of the Return to Work Policy from the employer of the injured worker
   d. A "First Report of Injury" form to furnish the insurance company with the necessary information to start a claim and pay medical bills
   e. A "Bona Fide Offer of Employment" form to guarantee suitable employment for medically restricted workers

5. The worker's SSR will drive the injured employee to the clinic to guarantee safe transport and present the "Authorization to Treat" form to obtain swift response. This form will also notify the clinic that a test for drugs and alcohol is required. If the injured worker is transported elsewhere, Contractor shall also notify the insurer. The supervisor shall also be at the clinic to respond to questions from the physician.

6. After the doctor has completed the examination and all required medical care, the worker's SSR and the worker shall meet with the doctor to accomplish three objectives:
   a. Review the injury and discover the need for any additional medical assistance.
   b. Discuss suitable Return to Work positions to accommodate any medical restrictions.
   c. Present the worker with a "Bona Fide Offer of Employment" form to guarantee continuing employment and to guarantee work tasks that will not exceed prescribed medical restrictions.

7. The worker's SSR shall then drive the worker back to the Project and shall make suitable arrangements to get the worker and personal vehicle home at the end of the day. If the doctor has written a prescription that contains orders for medical restrictions, the worker must be assigned to ("Light Duty") tasks that meet the restrictions. This presents a "win-win" for all involved as follows:
   a. The injured worker will continue to draw his/her full paycheck.
   b. The employer will be able to keep its insurance rating as competitive as possible.
   c. The insurance provider will be able to keep the costs of medical claims as low as possible.

8. The SSR must promote three issues to quickly and completely restore health:
   a. Maintain awareness of medical restrictions, and assign work tasks that do not violate the restrictions.
   b. When contacted by the insurance agent, be candid and share any information that may expedite the physical recovery of the injured worker.
   c. Allow reasonable times for physical therapy (or other medical treatment) and maintain contact with worker.

9. **Zurich** is the insurance company that will pay the medical bills. Contractor's Project Safety Coordinator will have the contact information to file the required insurance claim.

SPECIAL NOTE: No matter where the worker receives medical treatment, a drug and alcohol test MUST occur at the Project assigned clinic. Employers must not allow workers with confirmed drug or alcohol impairment to return to employment on any UT System Project unless the drug is prescribed by a physician and the work assignment can be safely performed.

EXHIBIT I	CONTRACTOR SUBMITTAL TO OWNER - TEMPLATE

The University of Texas System – Construction Project Safety

REQUEST FOR VARIANCE

Date of Request:

From: *(insert name of Contractor and name of person signing on behalf of company)*

To: Office of Facilities Planning and Construction – *(insert name of OFPC RCM)*

Project Name: _____

Project Number: _____

We respectfully request a variance from the Contract, Section # 01 35 23 (Project Safety Requirements). We understand that no alteration of safety procedures is to be allowed until formal acceptance is executed by OFPC.

We believe that the following regulation(s) is/are either not practicable or not the best practice for the Project at this time.

(Insert verbiage that describes the specified regulation.)
(Insert description of how and why the existing conditions make the existing regulation less than the safest method for accomplishing the work – convenience is not an acceptable reason.)
(Insert the proposed method in sufficient detail to allow a reader to visualize the better plan.)

Very truly yours,

_____ _____
Signature *Position*

On behalf of the Board of Regents of The University of Texas System, Contractor's request is:

ACCEPTED ☐ DENIED ☐

_____ _____
Printed name *Signature*

Request reviewed by OFPC Regional Program Manager

_____ _____

Printed Name *Signature*

Request reviewed by OFPC Resident Construction Manager

*Note: This variance as reviewed is understood to be for this scope of work and this project only. It is further understood that this variance is not portable as it relates to any other OFPC Project.

Cc: OFPC Safety Analyst - Austin

EXHIBIT J	ROOT CAUSE ANALYSIS FORM

Root Cause Analysis OFPC Project Name_____

Name of Incident_____

OFPC Project Number _____

Date of Incident _____

Employee Injury? ☐ No ☐Yes If yes, list employee name_____

Date of RCA _____ If revising, date of revision_____Revision No._____

Contractor _____ Subcontractor (if applicable)_____

This RCA is due to:

☐ Injury, ☐ Level "A" Safety Deficiency, ☐ Property Damage, ☐ Other Incidents as directed by Owner

Identify all underlying contributing factors to reduce potential for recurrence of same type incident. Remember:

- ✓ Worker's actions made sense to that person at the time (circumstances & perceptions)
- ✓ Understand the thought process behind the decisions that were made at the time
- ✓ Look beyond the individuals involved to uncover systemic contributing risk factors ☐ Break the blame cycle (culture must value honest reporting - learning organization) ☐ Find error precursors & flawed or missing defenses or processes that led to incident

The Root Cause Analysis investigation should thoroughly address these questions:

1. Was the incident controlled and limited so that all workers and the project were made safe post - incident? What was done?
2. Explain what happened (facts and circumstances) that resulted in the incident.
3. Are there other work areas or tasks where this type of incident could occur again?
4. If worker's actions contributed to the incident, why did the worker feel this was the best course of action at the time?
5. What processes were in place to prevent the incident? Identify processes that failed.
6. Is there any other information that should be known that is relevant to this incident?
7. What processes could have been implemented or improved that might have prevented this incident?
8. What processes will be improved or implemented to reduce risk of recurrence? When will these new processes be in place?

FOR OFPC USE ONLY	
Level	☐Fire Alarm ☐First Aid ☐Level A ☐Near miss ☐Property Damage ☐Recordable ☐SWPP ☐Other
Incident Type:	☐Caught between ☐Electrical ☐Equipment handling ☐Fall ☐Fall protection ☐Foreign body ☐Haz mat ☐Heat exhaustion ☐Ladder ☐Material Handling ☐Puncture ☐Security ☐Slip/trip ☐SWPP ☐Tool handling ☐Worn Equipment ☐Other
Injury Type:	☐N/A ☐Blunt trauma ☐Chemical burn ☐Contusion ☐Cramps ☐Crushing ☐Dust in eye ☐Fall ☐Flash burn ☐Heat exhaustion ☐Insulation in eye ☐Knee blood blister ☐Laceration ☐Laceration & shock ☐Other ☐Puncture ☐Shock ☐Sprain ☐Strain

EXHIBIT K **INCIDENT NOTIFICATION FLOW CHART**

NOTE: if calling to report a **serious** incident and someone in the calling chain is unavailable, leave a message, but then jump to the next in the chain to ensure notification is made timely. For example, if contractor cannot reach the PM, contact SPM; SPM would then make the calls for the PM.

NOTE 2: A **serious** incident report will include status of the injured person and follow up until stabilized or back on the job at work.

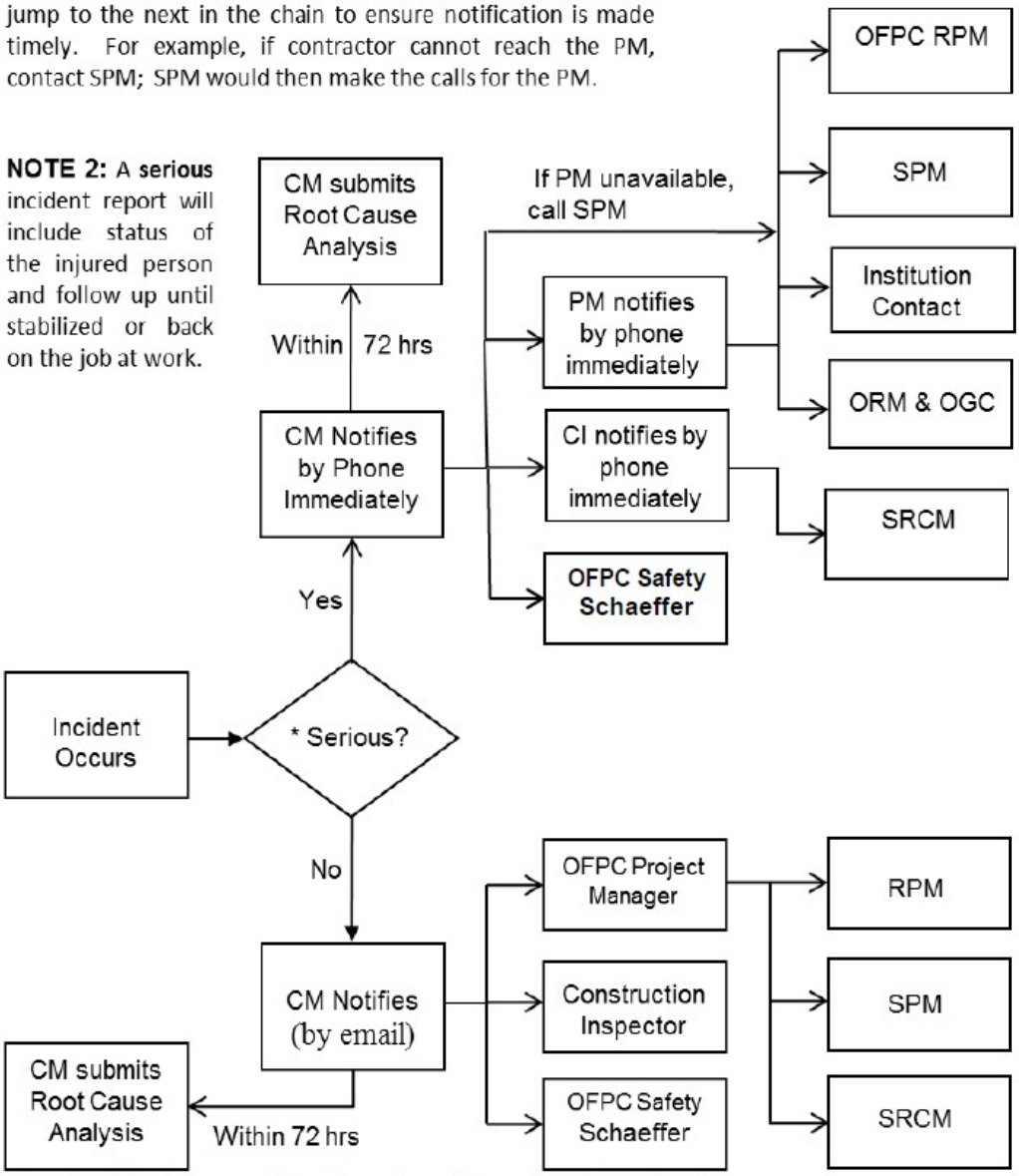

*** An incident is considered serious if any of the following occur:**

- EMS/Ambulance responds
- hospitalization is involved
- Life threatening or potentially life threatening
- Involves more than one employee injured

EXHIBIT L	TOWER CRANE ERECTION / DISMANTLE DOCUMENTATION

The University of Texas System – Construction Project Safety

REQUIRED INFORMATION TO BE SUBMITTED AND REVIEWED PRIOR TO ANY TOWER CRANE ASSEMBLY OR DISASSEMBLY OPERATION

The plan will need to be submitted for review by Owner at least two weeks prior to the date of the planned erection or dismantle. OFPC will be providing a third-party consultant during the erection or dismantle process. No work will begin until all plan elements noted below have been submitted and reviewed for acceptance. The plan must include at a minimum:

1. Annual inspection of all assist cranes that will be utilized to erect or dismantle the tower crane.
2. Operator's nationally recognized certification(s) and supporting training documentation for all make and model of cranes that will be used. Operator's annual physical.
3. Qualifications (with supporting training documentation) for the Erection/Dismantle Director and all crew members, riggers and signal persons. Training documentation must include organization and person(s) that conducted the training, material covered in the training, time spent on each training element, and details to the evaluation process used to verify worker understanding of training. This may be through testing and/or demonstration of skills. Rigging can only be performed by persons who possess documentation of completion from a training program that carries recognized accreditation.
4. Verification of soil conditions for all anticipated mobile crane positions. Detailed plan with map for the location(s) of the assist crane(s) and associated hazards in close proximity to those locations. Plan to control identified hazards.
5. Training documents for all crew members for their assigned task(s). A letter indicating positions with no supporting documentation is not acceptable. Fall protection training must be included. See # 3 for the required training documentation.
6. Details for work stoppage due to high wind speed or other inclement weather conditions. The actual shutdown procedure, including who is responsible for shutdown determination and how it will be communicated to all affected workers.
7. Copy of the manufacturer's equipment manual for review for the make and model of tower crane that will be erected or dismantled.
8. Structural information regarding the tower crane base pad (prior to erection).
9. Details on sequencing for sectional assembly and bolting (including torque) (prior to assembly), details on sequencing for sectional disassembly with bolt removal procedure (prior to dismantle) and rigging procedure with verifications. Cannot indicate that plan will follow manufacturer's equipment manual.
10. Documentation showing that each worker has been drug/alcohol tested within two (2) weeks prior to work start on the project. Negative result per worker is needed for entry.

11. Prior to the assembly of a tower crane, the General Contractor will need to develop a High Angle Rescue Plan. The intent of this plan is to be able to effectively remove an individual from the horizontal portion of the crane in the event of an emergency prior to assembly and during use of tower crane.

REMINDER - this information submission in no way removes **the Contractor's safety professionals and project management team** from the obligation of ensuring all documentation is provided, reviewed for adequacy based on the planned task(s), ensuring that the work is pre-planned and communicated to all affected workers, all workers are properly trained to perform their individual tasks, and that all work is done according to the agreed upon plan and the manufacturer's requirements

Daily Job Hazard Analysis

This JHA is valid only for the work and date specified. This JHA shall be posted at the immediate work area while the work is ongoing. If the noted conditions change, the JHA shall be re-evaluated to incorporate changes and reissued immediately. Any emergency or incident automatically invalidates this JHA. When this JHA expires, it must be returned to the PSC/PSA for record purposes.

Project Name and Number		Date and Time	
Company Name		Supervisor	

Description of work to be performed:

A. Are Permits Required? Are they displayed and properly signed by the PSC/PSA?

Hot Work	Y		N		Confined Space	Y		N	
Lockout/Tag-out	Y		N		Roadway Traffic	Y		N	
Excavation	Y		N		Other (specify)				

B. Atmospheric Monitoring

Oxygen Concentration	Y		N		Reading	
Combustible Gas/Flammable Vapors	Y		N		Reading	
Hazardous/Toxic Gas	Y		N		Reading	
Are concentration levels safe?	Y		N			

C. THINK about the work you and your crews will be doing today. Place a Y for Yes or N for No next to each element. All elements identified with a Y or Yes must be addressed in Section D.

C.1 Specialized Operations

	Confined Space		A-Frame Ladders		Other (provide details below)
	Aerial Man-lifts		Extension Ladders		
	Lockout/Tagout		Scissor Lifts		
	Excavations		Opening /Isolation of equipment		
	Trenches		Loading/Un-loading >50lbs		
	Motorized Equipment		Work on live equipment		
	Ground Supported Scaffold		Welding		
	Suspended Scaffold		Burning/Cutting operations		
	Mobile/Rubber Tire Crane		Work at Heights >6'		
	Tower Crane				

C.2 Hazards

	Airborne Particulates		Falls		Public Traffic (vehicle/Foot)
	Body Stress (hot/cold)		Slip/Trip Hazards		Repetitive Motion
	Lighting		Pinch Points		Lifting
	Noise		Electric Shock		Material Handling
	Radiation		Sharp Objects		Work of Others (specify)
	Chemical Exposure (skin/eyes/inhalation)		Thermal Burns		
	Flammable Materials		Housekeeping		
	Overhead Work		Obstructed View		Other Hazards (specify)
	Motorized Equipment		Awkward Positioning		
	Access/Egress Paths		Insects/Animals		
	Floor Cut-outs		Walking Surfaces		

C.3 Hazard Controls

	Hazard Assessment		Walking/working surfaces clear and unobstructed		Protective Suits
	Pre-task Planning		Proper storage of material and equipment		Hard Hats
	Worker Training		Equipment warning/safety devices operational		Safety Glasses
	Equipment Selection		Proper lifting,/placement/securing of material		Face Shield/Goggles
	Equipment Inspection		Fall protection in place/inspected/maintained		Traffic Safety Clothing
	Permits developed and reviewed		Housekeeping maintained daily and verified		Fall Protection
	Work area verification of conditions		Fire protection measures in place		Hearing Protection
	Review of As-builts		Equipment grounded/bonded		Gloves
	Utility owners contacted		Flash burns shielded		Respirator
	Utilities located and confirmed		Spark containment		Foot Protection
	Equipment operators qualified		Flow able material contained		Other (specify)
	Equipment training documented and on-hand		Emergency response in place and communicated		
	Atmospheric Testing		Barricades/covers/signs in place and secure		
	Live equipment isolated? (list equipment below)		Stand-by persons (specify name and task below)		

C.4 Proper PPE

	Competent Person (print name)		Spotter/Flagger/Traffic Control (print name and task)

D. This portion of this JHA is to be completed by the supervisor with input from crew members. Once complete this JHA must be reviewed with all affected crew members or when conditions change.

Work Activities based on C.1 _____

Possible Hazards base on C.2 _____

Controls to Address Hazards based on C.3 _____

C.5 Emergency Response			
Fire Extinguishers located at?		Report Emergencies to? (name & number)	
SDS located at?		(name & number)	
Eye Wash Station located at		Emergency alarm sounds like?	
Firs-aid/AED located at?		Muster Point is located at?	

E.	Crew Printed Name	Signature	Badge #		Crew Printed Name	Signature	Badge #
1.				11.			
2.				12.			
3.				13.			
4.				14.			
5.				15.			
6.				16.			
7.				17.			
8.				18.			
9.				19.			
10.				20.			

F. JHA developed and communicated by;		Daily JHA reviewed by (PSC/PSA):	
Printed Name	Signature	Printed Name	Signature
Date	Time	Date	Time

EXHIBIT N	CONTRACTOR ACKNOWLEDGEMENT STATEMENT

SAFETY SPECIFICATION 01 35 23
CONTRACTOR ACKNOWLEDGEMENT STATEMENT

Project: _____

Project No: _____

By executing this document as an authorized representative of the referenced Company identified below, I acknowledge and confirm that I have read and understand the contents of the UTS Safety Specification 01 35 23 in its entirety. I also recognize and acknowledge that the obligation to protect safety and health is not limited to the requirements of UTS Safety Specification 01 35 23 only, but also includes all applicable rules, regulations, and guidelines necessary to provide a safe and healthful working environment for all employers and employees on the project. The Company will comply with all applicable safety requirements.

The Company will further communicate the requirements of the UTS Safety Specifications 01 35 23 and other applicable safety rules, regulations and guidelines to all tiered Subcontractors that will perform work on the Project and obtain and submit to Owner a signed copy of this Contractor Acknowledgement Statement from each such Subcontractor.

_____
(Legal Name of Company)

_____
(Address)

_____
(Type Name of Officer)

_____
(Signature of Officer)

_____
(Title)

_____
(Date)

SECTION 01 35 25 – OWNER SAFETY REQUIREMENTS TABLE OF CONTENTS

1.01 .....RELATED DOCUMENTS 3

1.02 ..... SUMMARY 3

1.03 .....REFERENCE STANDARDS 3

1.04 ..... DEFINITIONS 4

1.05 .....EMERGENCY / IMPORTANT CONTACT INFORMATION 4

2.01 ..... GENERAL 4

3.01 ..... ASBESTOS CONTAINING MATERIAL 4

3.02 .....BLOODBORNE PATHOGENS 4

3.03 .....CELLULAR PHONE AND RADIO USE 5

3.04 ..... CONDUCT 6

3.05 ..... CONFINED SPACES 6

3.06 ..... CONSTRUCTION SAFETY SITE INSPECTIONS 7

3.07 ..... CONTRACTOR DAILY SIGN-IN AND WORK NOTIFICATION - HOUSTON 7

3.08 ..... CONTRACTOR DAILY SIGN-IN AND WORK NOTIFICATION – SMITHVILLE / BASTROP 7

3.09 ..... CONTRACTOR INJURIES AND INCIDENTS 8

3.10 ..... CONTRACTOR SAFETY ORIENTATION 8

3.11 .....ELECTRICAL SAFETY 8

3.12 .....EXCAVATIONS 9

3.13 .....FALL PROTECTION AND PREVENTION 10

3.14 ..... FIRE PREVENTION 10

3.15 .....FIRE REPORTING AND EVACUATION PLAN 12

3.16 ..... GENERAL SITE CONDITIONS – LIFE SAFETY 12

3.17 .....HAZARD COMMUNICATION (HAZCOM) 13

3.18 ..... HAZARDOUS WASTE AND WORK IN HAZARDOUS LOCATIONS 13

3.19 .....HOT WORK PERMITS 14

3.20 .....HURRICANE / SEVERE WEATHER PLANS FOR CONSTRUCTION SITES 15

3.21 ..... IDENTIFICATION (ID) BADGES 15

3.22 .....INTERIM LIFE SAFETY MEASURES (ILSM) GUIDELINE 16

3.23 .....LADDER SAFETY 16

3.24 .....LOCK OUT / TAG OUT 17

3.25..... .....MAINTAINING INDOOR AIR QUALITY (IAQ) DURING CONSTRUCTION AND RENOVATION ACTIVITIES 17

3.26 ..... PERSONAL PROTECTIVE EQUIPMENT (PPE) 18

3.27 ..... ROOF WORK 19

3.28 .....SANITATION AND HOUSEKEEPING 20

3.29 ..... SITE POSTINGS 21

3.30 .....SCAFFOLDING 21

SECTION 01 35 25 – OWNER SAFETY REQUIREMENTS

PART 1 - GENERAL

1.1 RELATED DOCUMENTS

A. Drawings and general provisions of the Contract, including General Conditions and Division 01 Specification Sections, apply to this Section.

B. Specifications throughout all Divisions of the Project Manual are directly applicable to this Section, and this Section is directly applicable to them.

C. For projects enrolled under the Owner Controlled Insurance Program (OCIP), this Section supplements Section 01 35 23 Project Safety Requirements, with additional Owner requirements for work within existing facilities or for work in areas controlled by the Owner.

1.2 SUMMARY

A. The control of Project Safety by the Contractor is an essential element of performing work at The University of Texas MD Anderson Cancer Center (MD Anderson). The Contractor shall, at all times, provide adequate resources, equipment, training, and documentation to assure a safe work environment at the Project site and to instill a culture for safety in the behavior of all supervisors and workers. Every worker shall understand that safety and health issues always take precedence over all other considerations, and that identifying, reporting, and correcting unsafe acts and conditions are the responsibility of everyone at the Project site.

B. MD Anderson is dedicated to providing a safe healing and work environment for all patients, visitors, staff, students, guests, and Contractors.

C. The details of this document should be considered as supplemental requirements. The Contractor shall develop, implement, maintain, and submit to the Owner a written Project Safety Program that meets or exceeds all Federal, State, and Local standards and regulations pertaining to construction activities. The Contractor and every Subcontractor shall comply with the rules and guidelines outlined in this guideline. In any circumstances where this section differs with or conflicts with any standard or statutory requirement, the more stringent requirement shall apply. Contractors may use a company-wide safety program in lieu of the Project specific safety program as long as it meets or exceeds the requirements listed in these guidelines.

D. The Owner reserves the right to have any manager, supervisor or worker employed by the Contractor or Subcontractor removed from the Project for disregard of Project Safety requirements.

E. The Owner reserves the right to deduct from the Contract any safety related expenses that the Owner incurs, as a result of the Contractor's, or any Subcontractor's, disregard for Project safety.

1.3 REFERENCE STANDARDS

A. The latest published edition of a reference shall be applicable to this Project unless identified by a specific edition date.

B. All reference amendments adopted prior to the effective date of this Contract shall be applicable to this Project.

1.4 DEFINITIONS

A. The term “Owner’s Designated Representative” or “MD Anderson Representative”, as used throughout the document, shall refer any of the Owner’s Project management team, insurance carrier representative(s), Owner’s designated agent, or campus representative(s).

B. The term “Contractor” as used throughout the contract documents shall refer to the party having a direct contractual agreement with the owner to provide services. This term is to apply whether contractor is known as a prime contractor, general contractor, construction manager, or design/build contractor.

C. The term “subcontractor” as used throughout the contract documents shall refer to any on- site subcontractor, regardless of tier.

1.5 EMERGENCY / IMPORTANT CONTACT INFORMATION

A. Consult with your MD Anderson representative regarding the correct emergency contact information for the facility in which you are working. Each facility may have a different emergency call procedure.

PART 2 - PRODUCTS

2.1 GENERAL

A. All materials shall meet or exceed all applicable referenced standards, federal, state and local requirements, and conform to codes and ordinances of authorities having jurisdiction.

PART 3 - EXECUTION

3.1 ASBESTOS CONTAINING MATERIAL

A. Environmental Health Safety & Corporate Services (EHSCS) must review all Job sites prior to the start of a Project to determine the presence of Asbestos Containing Material (ACM).

B. All suspect materials shall be considered asbestos-containing material until identified otherwise by an EPA approved method of analysis for identifying asbestos-containing material.

C. Any contractor personnel needing to disturb any suspected asbestos containing building materials shall first contact their MD Anderson representative. It is then the responsibility of the MD Anderson representative to contact EHSCS to determine if there is any asbestos containing materials present.

D. Contract personnel coming into contact with known or suspected asbestos containing materials (ACM) will:

1. Avoid any physical contact or other actions that may damage or otherwise disturb the material.

2. Submit all requests for sampling suspected asbestos containing materials through your MD Anderson representative. If the material has not been previously identified as containing asbestos, EHSCS personnel will sample the materials, obtain analysis, and report results to the requestor.

3.2 BLOODBORNE PATHOGENS

A. Contractors shall instruct their employees in the concept of standard precautions and document training in accordance with OHSA 29 CFR Section 1910.1030.

B. The contractor must take every effort to prevent exposure to blood and/or body fluids while in the hospital.

C. Patient care and research areas are considered to have the potential for exposure and special instructions may be given by the nursing or research staff on how to avoid potential contamination. Contact your MD Anderson Representative to determine if an exposure potential exists for all areas in which you will be working.

D. Contractors shall not handle bags or containers identified as containing potentially infectious materials. Contractors may contact EHSCS at 713-792-2888 for additional questions.

E. For Smithville / Bastrop, contractors may contact EHSCS with additional questions at:

1. Smithville Office Phone: 512-237-9522; 9536

2. Bastrop Office Phone: 512-332-5232

3.3 CELLULAR PHONE AND RADIO USE

A. The use of the following devices in PMA locations should be used with caution (beyond six feet of physiological monitoring systems):

1. Cellular Phones

2. Computers with wireless capabilities

3. Two-way pagers

4. Wireless handheld devices

B. Definitions:

1. Cellular Phone – Telephone that uses a frequency range of 800 - 1910 MHz to transmit voice and data to a remote cell and up to 625mW of power.

2. Close Proximity - within twenty (20) feet for two-way radios and within three (3) feet for cell phones and others of a physiological monitoring system.

3. Non PMA Area - an area of M.D. Anderson facility outside of the defined PMA areas.

4. Physiological monitoring area (PMA)- An area of M.D. Anderson facility where patients are likely to require the use of a physiological monitoring (e.g., Electrocardiograph, electroencephalographs, pulse oximetry, cardiac output, invasive pressure, etc.) for care or treatment.

5. PMA Locations: Bone Marrow Unit (G11), Cardiac Unit (P12), Cardio-Pulmonary Clinic (R8), Diagnostic Imaging (G3, R3, B3, ACB4-ACB7), Emergency Center (R1, P1, P2), Endoscopy Clinic (R5), Intensive Care Unit (G7), Operating Rooms (G5, ACB4), Pediatric Unit (G9, R7), Post Anesthesia Care Unit (G3, G5, ACB4, P3 Pod B), Rehab and Patient Therapy (P8), and the Telemetry Unit (P7).

6. Wireless Communication Devices - Cellular telephones and two way radios are the only devices currently defined as having caused interference to medical devices.

7. Two Way Radios – “Walkie-talkies" which use a frequency range of 29 - 1000 MHz to transmit voice between two locations up to 5 watts of power.

8. Wireless Handheld Devices – Commonly known as PDA (Personal Digital Assistant). Devices that provide a range of personal information management, voice communication, data communication, and computing capabilities, that relies on wireless technology to transfer or retrieve data. May include Palm Pilot, Pocket PC, Blackberry, Smartphone, or similar devices with operating frequency of 800 to 1900 MHz.

C. If allowed to be turned on, the volume of radios and cellular telephones must be turned down to minimize disruption to patients and operations.

3.4 CONDUCT

A. The use or consumption of alcoholic beverages or controlled substances is strictly forbidden on any Institution owned or controlled property.

B. Contractor shall not permit any person to operate a motor vehicle or heavy equipment while taking prescription or non-prescription medication that may impair their ability to operate safely.

C. MD Anderson is a NO SMOKING Institution. No smoking or use of tobacco products is allowed on any Institutional property. There are no designated smoking areas. Anyone found smoking will be immediately removed from the jobsite.

D. Contractor personnel shall be courteous to all tenants, business invitees, patients, visitors, and employees.

E. Unacceptable behavior on the part of the workers anywhere on campus, including parking lots, the project site, the accessible route(s) through the site or through the campus may lead to the identifiable contractors being removed from the project.

F. Personal grooming, personal hygiene and language by contractors must be constructed in a professional manner at all times. Use of foul and off-color language will not be tolerated and can result in contractor removal from jobsite.

G. Shirts must have sleeves of at least 3 inches, measured from the armpit seam. All buttoned shirts must be buttoned to at least the third button from the top. T-shirt styles may be approved if they are part of a company uniform or contain no political or offensive language or images. For additional guidance, see Section 3.26 Personal Protective Equipment.

H. Pants that are excessively loose, torn, ragged or with dragging cuffs will not be permitted. Shorts are not allowed.

I. No clothing, accessories, or hardhat stickers that display offensive, derogatory or inflammatory wording or graphics shall be worn on any institution owned or controlled property.

J. All clothing must be in good repair and free of any large holes or major damage. All clothing must be clean and sanitary at the start of each work shift and periodically cleaned to prevent tracking dust and debris out of the construction area.

K. Workers clothing must be clean of visible dusts and dirt when outside of the project site.

L. No radios or music shall be allowed on the project including headphone systems. Personnel must be able to hear alarms and warnings in the immediate area. (This does not pertain to the use of two-way hand held communication equipment or phones).

M. No tools or equipment will be loaned by owner to contractors to assist them in completing projects.

N. Contractor personnel shall not tape back lock/latch mechanisms nor prop open any exterior door, security door, stairwell door, or fire / smoke door. Personnel may not disconnect any electronic security device or defeat lock systems.

3.5 CONFINED SPACES

A. MD Anderson does not provide any confined space entry support such as sampling, entry permits, rescue personnel, rescue equipment, etc., for contractor personnel.

B. Contractors are responsible for ensuring all of their employees are trained on the recognition and significance of confined space entry procedures in accordance with 29 CFR 1910.146.

C. It will be the responsibility of the contractor performing the work inside the confined space to provide the necessary equipment to assess the hazards within the space and prepare the space for entry and to meet the precautions of the entry permit.

D. Contractor shall provide all emergency rescue equipment and personnel as required by 29 CFR 1910.146, as applicable.

E. The contractor conducting the work inside a permit-required confined space shall follow, at a minimum, all applicable OSHA requirements.

3.6 CONSTRUCTION SAFETY SITE INSPECTIONS

A. All construction sites will be subject to periodic inspections by EHSCS representatives. The inspector(s) will be looking for life safety, environmental, construction safety, and indoor air quality deficiencies. Once noted, the inspector will notify the MD Anderson representative responsible for the site. The inspector may also notify the contractor representative on site.

B. All noted deficiencies shall be immediately corrected. Contractor shall provide a response to the EHSCS safety inspector within 3 business days of the original safety report.

C. The inspector will be enforcing IAQ measures found in the “Maintaining Indoor Air Quality During Construction and Renovation” policy / procedures and other requirements set forth in the MD Anderson construction specifications for that project. (See Attachment A).

D. A job or activity will be suspended if an imminent danger to patients, animals, visitors, employees, Contractor personnel or facilities is observed.

3.7 CONTRACTOR DAILY SIGN-IN AND WORK NOTIFICATION - HOUSTON

A. Contractors must follow any specific check-in procedures for the facilities in which they will be working. Your MD Anderson representative will inform you of these procedures.

B. All Contractors/vendors must wear an MD Anderson-issued ID badge at all times while on property owned or under the control of the Institution. Badge must be worn and be visible at all times. Contact your MD Anderson Representative for assistance in obtaining an ID badge.

3.8 CONTRACTOR DAILY SIGN-IN AND WORK NOTIFICATION – SMITHVILLE / BASTROP

A. Contractors/Vendors hired by the Facilities Management Division must register their activities with Facilities Management before commencing work.

B. Contractors coordinate with Project Managers for access to the campus. Contractors must submit a construction schedule to Physical Plant Management.

C. Physical Plant informs Facilities Management of contractors schedule as well as the badge numbers issued to that contractor. Facilities Management will issue badges to contractor for their use while on the property. Contractors are responsible for distributing the badges as needed.

D. Contractor/vendor registration is performed in the Physical Plant Building.

E. All Contractors/vendors must wear an MD Anderson-issued ID badge at all times while on property owned or under the control of the Institution.

F. Contractors/vendors who fail to register with Physical Plant Management are subject to removal from the property by the UT Police.

3.9 CONTRACTOR INJURIES AND INCIDENTS

A. Contractors shall make prior provisions for the treatment of minor injuries.

B. Contractor is responsible for cleaning up all blood and body fluids and debris from accidents.

C. Contractor employees requiring immediate medical treatment should be taken to the emergency room of a local hospital. MD Anderson does not provide medical treatment to Contractors engaged in projects.

D. If an injured worker cannot be moved and assistance is needed, contact the Houston or local Fire Department (911) for an ambulance.

E. An injury requiring treatment beyond minor Job Site First Aid, shall be reported immediately to your MD Anderson Representative or Designee and Monitoring Services 713-792-2888 (All Houston Locations) and UTPD Smithville/Bastrop at 512-332-5371 or 512-237-9411

F. A copy of the incident / accident report must be provided in a timely manner to your MD Anderson Representative. A preliminary report must be made within 24 hours of the end of the next working day.

G. All incidents that result in property damage must be reported to your MD Anderson Representative.

3.10 CONTRACTOR SAFETY ORIENTATION

A. All Contractor personnel are required to complete the MD Anderson Construction Safety and Infection Control Orientation Training given by the EHSCS Office before beginning work at the Institution. Videos can be requested through the EHSCS department or your MD Anderson Representative and are available in both English and Spanish.

B. Completion of orientation is required to obtain an MD Anderson hardhat sticker. .

C. The Contractor may be required to attend orientation again for refresher, and review any changes if deemed necessary by the Owner.

D. The Contractor's MD Anderson Representative must contact the EHSCS office to make arrangements for the orientation session.

E. It is the responsibility of the Contractor to ensure that the information given in the orientation session is understood by all workers (i.e., Spanish or other language translation).

3.11 ELECTRICAL SAFETY

A. Refer to Section 3.24 on Lock Out / Tag Out requirements.

B. All electrical power tools, equipment and extension cords shall be inspected daily before use. Defective items shall be immediately removed from service for repair or replacement.

C. NOTICE: RED OUTLETS are for power requirements provided by the Emergency Generator System and shall NOT be used by Contractor personnel.

D. Ground Fault Circuit Interrupters (GFCI's) shall be in use between any permanent receptacle and any Contractor equipment.

E. Temporary power panels shall have GFCI protected circuits built into the panel.

F. The GFCI shall be tested for function before plugging in any Contractor equipment.

G. Electrical power tools shall be grounded, or double insulated, or battery powered. The cord on the tool must be free of defects.

H. Battery powered portable hand tool battery charging stations are not to be plugged into hallway or exit stairs outlets or other areas so as not to create a trip hazard.

I. Extension cord sets shall be the “heavy duty” three-wire grounded type (14 gauge or larger), and must be rated for the particular application in which it is to be used.

J. Three-wire flat type extension cords are NOT permitted.

K. Defective cord ends must be replaced with a UL rated repair end; Contractor must follow the manufacturer instructions for repair installation.

L. Damage to the cord jacket shall not be taped over and must be repaired per manufacturer’s recommendations.

M. Extension cords shall be routed overhead whenever possible or otherwise protected against damage or tripping hazard by being securely taped to the floor or secured by other acceptable means and approved by the MD Anderson representative.

N. Running/hanging extension cords through ceiling spaces is not permitted. Special permission from EHSCS is required for any variation from this requirement.

O. Extension cords must be used as designed by the manufacturer. Avoid using extension cords in a manner to cause damage to the electrical system or cause personal injury.

P. All electrical shutdowns and electrical “taps” must be coordinated through the Project Manager or MD Anderson representative for that project.

Q. Contractors are absolutely not allowed to turn on/off any electrical source breakers or switches without permission from the respective MD Anderson Facilities Management representative for that building/space. This should be accomplished through a Utility Shutdown Request submitted by the Project Manager or MD Anderson representative.

R. Existing and new electrical equipment must be protected at all times from humidity, liquid material splashes, activities inducing to vapor formation and condensation.

S. No liquid materials shall be handled in electrical rooms, electrical equipment areas or areas adjacent to electrical equipment locations.

T. In the event that the contractor must handle liquid materials in the vicinity of electrical equipment locations, the contractor must inform the owner and seek written approval, prior to bringing those liquid materials to the above-mentioned locations.

3.12 EXCAVATIONS

A. All excavation shall have the following prerequisites:

1. Discussion with the appropriate MD Anderson representative or site owner/property manager of as-built locations of all underground utilities in the vicinity;

2. Where applicable, a phone call for utility “locates” shall be completed seventy-two (72) hours in advance. “Potholing” and hand excavation shall be required within three horizontal feet of “located” centerlines.

3. All excavations must follow the applicable OSHA guidelines and requirements as related to design and protection of excavations.

4. All trench excavations should be backfilled or plated at the end of each shift.

5. When an excavation cannot be backfilled or plated in the same day it is created, a highly visible hard and sturdy barricade such as a wooden fence or wooden railings shall be erected. Excavation protections in areas of traffic must comply with local, state, or federal safety standards.

6. Means of access into excavations shall be removed or physically barricaded at the end of each workday.

7. Excavations in areas of public access shall be secured with a temporary “hard” barricade such as solid fencing or wooden railings to prevent entry. These excavations and protection plans must be approved by the EHSCS office.

B. Where applicable, all required engineer stamped excavation plans must be readily available at all excavations for review by MD Anderson representative(s). Certificates of soil testing shall also be made available.

3.13 FALL PROTECTION AND PREVENTION

A. Work in areas not protected by a standard guardrail system or present a fall hazard greater than six (6) feet shall require compliance with all current applicable OSHA Fall Protection requirements and/or ANSI/WCA I-14.1 Window Cleaning Safety Standard.

B. The Contractor shall ensure that all workers exposed to fall hazards have been properly trained and equipped by their employer.

C. No worker or equipment shall be allowed to perform work directly above another worker unless adequate overhead protection is provided.

D. Covers or fencing of sufficient design shall be placed over holes, roof and floor openings or drop offs to prevent personnel or equipment from penetrating the opening. Floor openings shall be protected to maintain the required fire resistance rating.

E. Covers or fencing shall be physically secured and clearly marked with warning message, such as “Danger”, “Hole”, or “Cover! Do Not Remove”.

F. If a cover is too small for a warning message, it shall be painted bright orange or red.

G. All puncture and impalement exposures shall be covered or eliminated as soon as they are created. Exposed ends of rebar are to be covered with material that is designed to prevent impalement of a 250-pound body from a fall of four (4) feet.

3.14 FIRE PREVENTION

A. All combustible materials shall only be stored in approved areas as designated by the MD Anderson representative.

B. MD Anderson is a NO SMOKING facility. No smoking or use of tobacco products is allowed on any Institutional property. There are no designated smoking areas. Anyone found smoking will be immediately removed from the jobsite.

C. Contractor shall coordinate the covering and uncovering of smoke detectors with Owner’s EHSCS Department (713-792-2888) prior to starting work or upon discovery of such devices as work progresses. Covering smoke detectors with tape, rubber gloves, or any other method that can agitate or damage a detector is prohibited.

D.

E. For large or high dust generating projects, the contractor shall coordinate with their Project Manager or MD Anderson representative to arrange for the replacement of smoke detectors with heat detectors. EHSCS must approve all changes to any fire alarm or suppression systems.

F. Combustible scrap, trash, and debris shall be removed from the project site on a daily basis, or, more frequently as required.

G. Contractor shall not tape back door lock/latch mechanisms nor prop open any door, security door, stairwell door, or fire / smoke door. Lock cores shall not be removed. Coordinate changing lock cores to the designated construction core lock with your MD Anderson representative.

H. Flammable products shall be limited to one days supply inside the building. Flammable products shall be stored outside the building or in approved UL Rated flammable storage cabinets. Flammable liquids shall be in approved safety cans or cans designed for their use.

I. No internal combustion engines or portable propane heating devices are allowed in any Institutional buildings unless approved by the Owner. Coordination of how gasoline will be transported through buildings and stairwells must be coordinated with your MD Anderson representative.

J. Absolutely no gasoline will be allowed inside MD Anderson owned buildings. For temporary use outdoors, only approved metal safety cans will be permitted.

K. Compressed flammable gas cylinders (i.e. acetylene) shall not remain inside the building overnight and must be removed from the premises at the conclusion of each workday. Oxygen cylinders must also be removed from the premises at the end of each workday. Gas bottles are not allowed to be stored in areas that are used as contractor offices.

L. The contractor shall also have the Safety Data Sheets (SDS) for each gas used available within 15 minutes when requested.

M. Compressed flammable gas cylinders, while on the project site, shall be secured by chain or other suitable method to prevent tipping or falling over. All safety caps shall be securely installed when tanks are not in use.

N. When working in the ceiling space or on rated fire/smoke rated walls and structures, all holes and penetrations for wires, conduits, piping, etc. shall be sleeved and sealed with a UL approved fire caulking / sealing compound at the end of each workday (except when UL listed assembly does not require a sleeve). Any holes that must remain overnight must be sealed with an equivalent temporary fire proofing material as approved by the MD Anderson representative.

O. Work on fire sprinkler and detection systems shall continue until the system operation is fully restored. No impairments will be allowed to extend beyond approved periods of time or during times when the site is unattended.

P. Shutdown of any fire suppression or detection systems/devices shall be coordinated through the Owner's designated representative. Unauthorized shutdown or disabling of life safety systems shall be grounds for immediate removal from the jobsite.

Q. All Contractors are required to supply and maintain a minimum of one currently tagged ABC fire extinguisher, 10 pound (Class 2-A) or greater. The use of a MD Anderson owned fire extinguisher will not be permitted. Requirements are as follows:

   1. Indoors - Within 100 feet of any Class-A hazard, within 25 feet of any hot work and one for every 3000 square feet of floor space.

   2. Outdoors – between 25 - 50 feet of any hot work.

R. All Contractor employees shall be trained on the proper use and handing of fire extinguishers.

S. If a project involves multiple locations on a single floor or on multiple floors, additional multi-purpose fire extinguishers are required. Hot work permit requires fire watch personnel on floors above and below.

T. The Owner may require additional extinguishers as dictated by the risk of each project or project area.

3.15 FIRE REPORTING AND EVACUATION PLAN

A. Contractor shall establish a designated emergency evacuation assembly area for all projects prior to starting work. Contractor shall train all employees on assembly area locations and how to get to each area.

B. For areas that do not allow a clear view of egress route, the contractor must post easy to understand maps, that are clearly visible to all workers and visitors, of the proper exit paths as required by OSHA and NFPA.

C. In the event of a fire alarm, all work is to stop, all sources of ignition or hazardous work shall be immediately halted and all personnel are to proceed to the door of the construction site and wait for further instructions.

D. In the event of a smoke, fire, or emergency incident the following procedures should be followed:

1. RACE – Rescue, Alarm, Confine, Evacuate/Extinguish

a. Rescue: rescue Patients, Visitors, Employees

b. Alarm: a fire alarm pull station should be activated as quickly as possible or call 911.

c. Confine: confine the fire or smoke by closing all doors to the area.

d. Evacuate/Extinguish: extinguish the fire after you have performed the above operations but only if you can do it safely.

E. When reporting a fire by phone:

1. The caller should provide their name, the location of the fire, and a brief description of the incident. The caller should not hang up until emergency services personnel instruct them to do so.

2. The caller should be prepared to guide the Fire Alarm Response Team and Emergency Responders to the fire location.

F. All contractor personnel shall report to their designated assembly area immediately. Contractor must coordinate the designated assembly area with their MD Anderson representative prior to the beginning of the project.

3.16 GENERAL SITE CONDITIONS – LIFE SAFETY

A. Contractors will comply with all OSHA and NFPA life safety requirements as related to emergency exiting and lighting for construction areas.

B. For areas that do not allow a clear view of egress route, the Contractor must post easy to understand maps, that are clearly visible to all workers and visitors, of the proper exit paths as required by OSHA and NFPA. Contractor should coordinate the creation of these maps with their MD Anderson representative.

C. Contractors are required to maintain any required temporary signs directing to exit routes. These signs shall be externally or internally illuminated by lighting that is either on emergency power or of the luminescent “glow-in-the dark” type.

D. All temporary lighting and bulb protective devices shall be maintained and in good working condition. Wiring for temporary lighting shall be removed at the conclusion of the project scope.

E. All emergency exit doors must be maintained and in good working order. Paths to exits must remain clear at all times.

F. Depending on the size of the project site and number of contractors working in the site, a contractor may be required to maintain at least two clearly marked exits per NFPA 101 and NFPA 241 requirements.

G. All exits must be clearly marked with the words “EXIT” or “EMERGENCY EXIT”. Doors that the contractor does not want to use for daily access may be marked with the words “EMERGENCY EXIT ONLY”.

H. All entry doors/gates to the project site shall be locked utilizing a green construction core in the lockset. Due to life safety requirements, chains and/or pad locks will not be permitted on any door. Contact your M.D. Anderson representative for the proper lock cores and keys.

I. If a combination key pad is installed on a jobsite, the door must also be equipped with a green construction core to ensure emergency personnel maintain access to the site. Key pads without a construction core will not be permitted. Contractor must also ensure that the combination to the key pad is not posted on the wall or door of the site. If this occurs, the combination must be changed immediately.

3.17 HAZARD COMMUNICATION (HAZCOM)

A. The Contractor shall provide training and maintain documentation that their personnel and Subcontractors have received proper training in Hazard Communications under the provisions of OSHA’s requirements in 29 CFR 1910.1200 and/or 1926.59.

B. A printed, legible copy of the Safety Data Sheet (SDS) shall be made available within 15 minutes of a request for each chemical used on the job site.

3.18 HAZARDOUS WASTE AND WORK IN HAZARDOUS LOCATIONS

A. Owner chemical, biological or radioactive materials (hazardous substances and equipment) must be moved or secured prior to beginning work in any area. Contractor shall coordinate the removal of these items with their MD Anderson representative.

B. The Contractor’s MD Anderson representative will coordinate any pre-site assessments with EHSCS, the laboratory principle investigator, clinic representative or laboratory manager to prevent disturbing experiments/animals or creating accidents.

C. All contractors must have permission from their MD Anderson representative and the laboratory manager or clinic representative before entering laboratory or hospital clinical work areas.

D. Disposal of all hazardous wastes generated by contractor activities is the responsibility of the contractor. All wastes must be removed from the premises.

E. Absolutely no chemicals, trash, paint, paint brush rinse, shop vacuum contents, excess materials, sand, dirt, etc. may be disposed of in storm sewers/drains or sanitary drains.

F. Contractor must prevent dirt from entering exterior storm drains by adding appropriate silt protection screen material to all exterior drains that may be impacted by the project.

G. Contractor must follow all requirements set forth in the Storm Water Pollution Prevention Plan (SWPPP) as indicated in the appropriate Project Specification (Section 01 57 23). Consult the EHSCS Office (713-792-2888) for questions regarding environmental permitting and plans.

H. All hazardous waste, fuel, oils, and chemicals stored outdoors must have adequate secondary containment to prevent discharge onto the ground or in storm or sanitary sewer drains. All containers must be stored to prevent theft or unauthorized access. All containers outdoors must also be protected from weather elements and secured from public access.

I. Contractor shall ensure that adequate spill protection equipment and supplies are readily available during all equipment refueling activities.

3.19 HOT WORK PERMITS

A. A valid and signed Hot Work Permit must be obtained anytime work being implemented involves the use of any incendiary or heating devices such as:

1. Electric Arc Welding

2. Oxygen Acetylene Welding

3. Tig/Mig Welding

4. Cutting/Soldering

5. Propane Torch

6. High Heat Producing Sources

7. Spark Producing Activities

8. Gasoline, diesel, or propane powered equipment used indoors, on roof surfaces, or within distances that could pose a threat of fire to facilities.

B. Determination of Contractor Hot Work Permit Process or UTMDACC Hot Work Process to be used made prior to beginning of project work.

C. All Smithville/Bastrop hot work applicants must go to Research and Administrative Facilities (RAF) office and fill out a blank Hot Work Permit. Instructions on how to properly fill out the permit are available.

D. Permits to work on ANY medical gas systems must be obtained from the Facilities Department responsible for that area prior to work.

E. Hot Work Permits shall be approved on and for the day of work and posted in the vicinity of any burning or welding operations that are to be completed inside or near a building or enclosure. Permits are issued for day of work only.

F. Hot work applicants must call 713-563-5000 to obtain the appropriate facility representative to issue a hot work permit for the facility in which they are working.

G. Responsibilities:

1. It is the responsibility of the contractor, vendor, and/or MD Anderson workforce members to read, understand, and acknowledge sections I, II, and III of the Hot Work Permit.

2. It is the responsibility of the facilities representative to complete Section IV and sign on the day of work.

3. Contractors are responsible for ensuring all of their authorized and affected employees are trained on the significance of welding, cutting, and brazing procedures in accordance with OSHA regulations 29 CFR 1910.252 - 1910.255.

4. At the end of any cutting operation or at the end of the day, all fuel gas cylinders must be removed from the facility. Fuel gas cylinders WILL NOT be allowed to remain in the facility overnight.

5. Anti-flashback arrestors shall be installed at the base of all Oxy-Acetylene cutting torches or at the pressure regulator gauges where the hoses are attached, unless the torch is equipped with a built-in arrestor. Only friction strikers shall be used to light and re-light Oxy-Acetylene torches.

6. Fire watch personnel shall be posted at every operation that produces sparks, flames or sufficient heat to create an ignition. Upon request for a hot work permit, fire watch personnel shall provide verification of successful Fire Watch training by the Houston Area Safety Council (HASC) or similar entity. Failure to provide current documentation will result in a denial of the hot work permit. Additional fire watch personnel shall be posted in all areas in which hot work sparks, slag, heat, etc. go beyond the sight of the primary fire watch.

7. Except in a fabrication shop or in front of a properly guarded grinding wheel, the person performing the work may not act as a fire watch personnel. When sparks, slag, or fire may fall to a different level, separate fire watch personnel shall monitor each level directly below the work (including exterior locations).

8. Heaters for welding electrodes shall have a manufacturer's label that certifies the purpose of the unit. Job-built heaters shall be prohibited.

9. The remains of welding electrodes shall be picked up and disposed of as soon as each electrode is expended. No welding electrode shall be permitted to fall and remain in the work area.

10. All temporary fabrication areas shall be approved by the facilities representative prior to starting work.

3.20 HURRICANE / SEVERE WEATHER PLANS FOR CONSTRUCTION SITES

A. Construction sites may be required to have a Hurricane/Severe Weather Plan special to that site. Consult with your MD Anderson representative for applicability, as some departments may require this plan for small projects.

B. A copy of the Hurricane/Severe Weather Plan must be submitted to your respective MD Anderson representative prior to starting work.

C. The Texas Medical Center (TMC) Emergency Preparedness Office or Campus Director (Smithville/Bastrop) will issue warning levels in the event of possible flooding or hurricanes. Contractors are urged to learn more about the TMC warning system by contacting their MD Anderson representatives.

3.21 IDENTIFICATION (ID) BADGES

A. It is the policy of The University of Texas MD Anderson Cancer Center to issue an identification (ID) badge to each employee and to all temporary agency and contractor personnel.

B. All badge requests must be processed by the MD Anderson department (i.e., PCPF, RAF, FPDC, , etc.) that is issuing the contract for work.

C. ID badges must be worn at all times in a highly visible manner while on property owned or under the control of the Institution.

D. Contractors are responsible for returning any badges for personnel that will no longer be providing services to the institution within one week after termination or conclusion of project.

E. The badge must be clearly visible to someone facing the wearer.

F. A fee may be required to replace a lost contractor badge. Lost identification badges that have programmed electronic access must be reported to the contracting department representative (i.e. Project Manager) immediately.

G. Personnel not wearing proper identification may be subject to immediate removal from the jobsite.

3.22 INTERIM LIFE SAFETY MEASURES (ILSM) GUIDELINE

A. Interim Life Safety Measures (ILSM) – Is a series of administrative actions required to temporarily compensate for significant hazards posed by existing National Fire Protection Association 101, as cited in UT MD Anderson Design Guide Element Z2005 Life Safety Code (LSC) deficiencies or construction activities.

B. All Contractors are required to abide by any ILSM requirements that may be implemented by the owner due to a temporary deficiency/hazardous condition and must be continuously enforced through project completion or until the deficiency is corrected. Each contractor shall be responsible for ensuring all personnel on site are aware of the Interim Life Safety Measures implemented.

C. Contractors may be required to keep daily logs of the condition of their jobsites.

3.23 LADDER SAFETY

A. Ladders must be inspected prior to each use. Defective ladders shall be immediately removed from service and removed from the job site.

B. Ladders shall be used only in accordance with the manufacturer's labeled instructions.

C. Stepladders shall be used only in the fully open position with spreaders locked in place. Using a folded stepladder leaned against a support is prohibited.

D. Employees shall not stand on the top platform, the step below the top platform or the back stretchers.

E. Do not sit on, or straddle the top platform.

F. Stepladders shall not be used for access to platforms or other elevated areas – an extension ladder is required.

G. Extension ladders must be properly positioned and locked in place.

H. Extension ladders used for access to elevated areas shall extend at least three feet beyond the supporting structure.

I. Extension ladders must be secured to the supporting structure or be held at the base by another employee.

J. Job built ladders shall conform to applicable ANSI Standards AND shall be limited to use in excavations or concrete form work only. These types of ladders must be inspected daily.

K. At the end of each workday, remove and store, or secure from use all portable and job-built ladders that provide ground access to any elevated platform or structure so as to prevent unauthorized access.

L. Chaining ladders to equipment or mechanical, electrical, or plumbing fixtures or piping is prohibited. Ladders must be stored in a manner to prevent blocked fire exits or escape routes. Ladders must not block access to equipment or facilities.

M. Portable stepladders and extension ladders shall be rated class I-A.

N. Ladders that have multiple sections that can be manipulated to form multiple surfaces and angles are not allowed.

O. Aluminum ladders are prohibited.

P. All exceptions to these requirements must be approved by MD Anderson EHSCS department..

3.24 LOCK OUT / TAG OUT

A. It is the policy of The University of Texas MD Anderson Cancer Center that its employees and contractors are protected from all energy sources during maintenance and repair activities.

B. Each facility has a Lock Out/Tag Out program. Contractors whose work will involve the Lock Out/Tag Out process shall comply with the provisions of the respective facilities management program and procedures. If there is a difference between the contractor's program and the institution's program, the more stringent procedure shall prevail.

C. Lock Out/Tag Out procedures may be specific to each type of equipment or device. Consult with the facility maintenance department for specific procedures.

D. Contractors are responsible for ensuring all of their authorized and affected employees are trained on the significance of Lock Out/Tag Out procedures in accordance with 29 CFR 1910.147 and must follow these requirements.

E. Only the authorized employee or contractor who applied a device is allowed to remove his/ her lock out or tag out device from each energy-isolating device so energy can be restored to the equipment. MD Anderson personnel may add locks or tags to tagged-out devices – contractors are not allowed to remove these locks or tags.

F. Never remove another person's tag/lock. Unauthorized removal of tags/locks will be grounds for immediate and permanent removal from the jobsite.

G. If tags/locks remain on equipment, contact the appropriate personnel or department for resolution to the removal process.

3.25 MAINTAINING INDOOR AIR QUALITY (IAQ) DURING CONSTRUCTION AND RENOVATION ACTIVITIES

A. It is critical to our patient's health that proper controls are in place to ensure indoor air quality is maintained during construction and renovation activities. These activities disturb existing dust and/or create new dust, which causes the release of Aspergillus and other mold spores into the air. These spores can result in serious complications, and potentially death, for immuno-compromised individuals.

B. The guideline covers all contractors involved in building maintenance, construction, renovation and/or repair and applies to all areas of the Institution.

C. An Indoor Air Quality (IAQ) Permit may be required for every project, no matter the duration. The permit explains the requirements needed to maintain the best possible air quality outside the work site.

D. This permit shall be posted at the site and shall remain posted until the completion of the project.

E. EHSCS will perform periodic inspections, verifying that the proper controls are in place and will periodically monitor sites with instruments used to measure applicable indoor air quality (IAQ) parameters.

F. Contractor must follow the requirements of the Indoor Air Quality Permit and the Maintaining Indoor Air Quality During Construction and Renovation Policy.

G. See Attachment A for the "Maintaining Indoor Air Quality During Construction and Renovation Policy" for the requirements that must be followed for each project. This policy is a guide to the minimum protective measures that are to be in place prior to start of all projects.

3.26 PERSONAL PROTECTIVE EQUIPMENT (PPE)

A. The minimum OSHA requirements for Personal Protective Equipment (PPE) shall be required of ALL persons on the project site. Each contractor/subcontractor shall provide their workers with all required PPE. The contractor is responsible to ensure that PPE is inspected and maintained in proper condition.

B. Safety Hard Hats: When required, every person in the project shall wear a hard hat that meets the minimum OSHA requirements.

C. When required, hardhats are to be worn and maintained in accordance with the manufacturer's recommendations. "Cowboy" style hard hats shall not be allowed, including ANSI approved hats. Hard hats that display noticeable wear or damage shall be replaced or repaired per manufacturer's specifications.

D. Eye Protection: When required, every person on the project shall wear eye protection. Additional face protection may be required when work operations create airborne particles, chips, or sparks. Eye protection and face protection shall meet the minimum OSHA requirements.

E. Shoes: when required, every worker on the project shall wear shoes that have soles with a resistance to punctures, leather or leather equivalent uppers that cover the entire foot and ankle and offer resistance to scrapes and cuts. Sandals, open-toed shoes, dress loafers, high-heels, fabric shoes and all athletic style shoes (including those with ANSI markings) are prohibited.

F. When required, exterior toe and metatarsal cover shall be used when activities involve impact exposures to the feet (ie; jackhammering, water blasting, concrete demolition etc), unless the shoe has this protection built into the footwear.

G. Clothing: when required, sleeve length shall cover the ball of the shoulder. Shirts shall not have noticeable holes, be long enough to be tucked into pants and be free of profanity, objectionable, or obscene messages. Pants shall be full length and without excessive holes.

H. Hearing Protection: when required, employees shall be provided with hearing protection against the effects of noise exposures from machines, equipment or surrounding operations generating sound levels that exceed OSHA hearing protection requirements. Employees required to use hearing protection shall be tested and trained in the use and limitations of such protection.

I. Hand Protection: when required, employees handling materials or equipment with potential hand injury hazards shall be provided with appropriate hand protection.

J. Harnesses, Lifelines, and Lanyards: when required, employees working in areas where there is an exposure to falls of heights greater than six (6) feet, regardless of work activities (i.e. steel erection, leading edge work, scaffold use, and brick masonry) shall be protected by measures that comply with the ANSI/ASSE Z359 Fall Protection Standard.

K. Respiratory Protection: when required, employees shall be provided with respirators when it is necessary to protect them from inhalation of toxic or harmful gases, vapors, mists, fumes, and dust.

L. When required, employees required to use respiratory protective equipment shall be medically qualified and thoroughly trained in the use and limitations of such equipment. Employer must demonstrate compliance with OSHA 29 CFR 1910.134.

M. Other PPE: when required, employees working in areas where there is a possible danger to other parts of the body not listed above shall be protected by the appropriate PPE for that body part.

3.27 ROOF WORK

A. All roof work must be approved by the Research and Administrative Facilities (RAF) - Chief Engineer at the campus you are working at prior to project start.

B. All roof access to T. Boone Pickens Tower must be approved prior to access. This area contains multiple radio transmitters and receivers that emit harmful radio and microwaves. All personnel accessing this area must have attended the required training. Contact the building owner for training requirements.

C. Contractor is responsible for ensuring that they are able to immediately contact emergency forces during an emergency event by providing cell phones, radios, or access to working phones within MD Anderson facilities. Contractor shall ensure personnel working on the jobsite know the address of the building.

D. Any roof repairs that are performed around fresh air intakes shall be scheduled with the respective facilities operations group prior to any planned work. Contractor is required to provide fume control devices when performing roof repair, replacement, or installation to prevent odors from being transmitted inside the facility.

E. Some areas of roofs may be restricted due to potentially hazardous exhaust from laboratories or processes. Contractor must obtain approval from their MD Anderson representative before proceeding with entering any roof areas.

F. Contractors are required to comply with all applicable OSHA and ANSI Fall Protection requirements.

G. Contact Research and Administrative (RAF) Chief Engineer and EHSCS OHS group regarding proper davit use and tie-off areas.

H. All roof work involving heated materials or open flames must have a valid hot work permit.

I. The Contractor shall have a 20 pound ABC Fire Extinguisher on the roof and immediately available for use. Institutional fire extinguishers will not be loaned. Additional extinguishers must be provided as needed.

J. All fire extinguishers must have current annual certification tags and in working order.

K. All open flames must be continuously supervised.

L. A 2-hour fire watch must be provided after any heated materials or open flames have been used during roof work. Fire watch personnel must perform a “touch test” to determine any residual hot spots. A laser thermometer is recommended.

M. All propane bottles must be removed from the premises daily. Do not store propane cylinders in mechanical or roof spaces.

N. All roofing materials shall be secured at the end of each workday to prevent disruption by wind and rain.

3.28 SANITATION AND HOUSEKEEPING

A. Contractors and subcontractors are responsible for ensuring that project sites are effectively cleaned.

B. “Effectively Cleaned” shall address all of the following issues:

1. Place all construction waste, trash, and debris in a designated receptacle. Glass bottles shall not be permitted in the project site. Trash must be removed on a daily basis as to prevent accumulation and attraction for pests. Contractor must have an approved method for removing trash from the jobsite (i.e., dumpsters, trucks, etc.) before starting work.

2. Eating is not allowed on the jobsite. Limited amounts of bottled soft drinks and water will be allowed but must be removed on a daily basis as to prevent attraction of insects or rodents.

3. Contractor may only use PUBLIC restroom facilities assigned by their MD Anderson representative. Contractors may not use staff restrooms.

4. Any waste, trash, and/or debris created by the contractor shall be cleaned (ie; sweeping, vacuuming, dust mopping, large debris removal etc.) at the end of the day to prevent accumulation of dirt and combustibles on the jobsite.

5. Contractors are NOT allowed to use sinks or drains to clean materials or paint brushes.

6. All holes and penetrations to the outside of the building must be sealed with an appropriate material as to prevent water, insects and rodents from entering the building.

7. All windows must remain closed unless permission is granted by EHSCS. All windows or penetrations used for ventilation purposes shall be protected from water, insect/rodent, and dust intrusion by use of protective covers and screen wire materials.

8. Stack (or restack) all whole and scrap materials in locations that do not obstruct a clear pathway nor create a risk for toppling onto a person passing by the area.

9. Place all hoses, cords, cables, and wires in locations that prevent them from damage and do not create tripping hazards.

10. Restore all signs, barricades, fire extinguishers, guardrails, gates, etc. to proper locations and condition.

11. Properly store and secure all flammable and combustible liquids and gases in proper containment or flammable storage cabinets.

12. Collect and place all cut-off or waste pieces of rolling stock, as they are created, into waste or scrap containers. No rolling stock shall be permitted to fall and remain in the work area.

13. Used shot strips from powder-actuated tools shall be properly maintained and disposed of in accordance with manufacturer's recommendations.

14. All puncture and impalement exposures shall be covered or eliminated as soon as they are created. Exposed ends of rebar are to be covered with material that is designed to prevent impalement of a 250-pound body from a fall of four (4) feet.

15. All work surfaces shall be maintained in level and smooth condition as to prevent rolling carts from catching and possibly falling over while in transit. Appropriate temporary fill materials shall be installed as warranted.

16. All wheeled equipment shall have non-marking wheels or tape shall be used over wheels when moving through non-project areas to prevent marking and damage to floor surfaces. Tape should be removed if adequate traction is required to perform a task. Tape can be removed once in job-site area.

17. Contractors shall only use their trash dumpsters or dumpsters designated by their MD Anderson representative.

3.29 SITE POSTINGS

A. Contractor shall securely post the required warning signs (as required by the Owner and OSHA) for the project area(s).

B. All signs must be approved by your MD Anderson representative. Consult your MD Anderson representative regarding facility specific informational signs.

1. Signs that warn of impending danger (i.e., CONSTRUCTION AREA – DO NOT ENTER)

2. Signs that communicate the level of personal protective equipment that is required (i.e., HARD HATS AND SAFETY GLASSES REQUIRED)

3. All necessary permits (i.e., Hot Work Permits, Indoor Air Quality Permit, ILSM and/or other State/Local Regulatory Agency Permits as required by law).

C. These postings must consist of the required color, size, and character size lettering and/or symbols as required by OSHA and/or Sate/Local regulations.

D. Signs must be made from a sturdy material that resists tearing and fading. Laminated signs are acceptable for indoor postings.

E. All exterior projects must contain the above noted required postings in all locations that warrant these warning signs and postings.

F. A single location such as a plywood project board is acceptable for posting required permits and project information signage. Any required permits should be protected from the elements by covering them in a laminate or waterproof material.

G. Contractor shall install and maintain any additional signs, barricades, warning devices, and traffic warnings.

3.30 SCAFFOLDING

A. All scaffold systems (any temporary elevated platform, supported or suspended) and its supporting structure (including its point of anchorage), used for supporting employees or materials or both) - shall follow the manufacturer instructions and adhere to all applicable OSHA requirements per each type of scaffolding device.

B. Contractor shall be required to receive permission from MD Anderson Facility – Research and Administrative Facilities before erecting any suspension or stationary scaffolding system on roofs or attaching lines to roof davits. Consult with the MD Anderson representative for approval before beginning any work.

C. All ground-supported scaffolds shall bear a safety tag that indicates the safety status of the scaffold. The contractor shall designate a universal project system for tagging scaffolding that is to be used by any or all personnel.

D. Training and documentation shall be required for all workers on the project who will erect, maintain, dismantle, or use the scaffolding. A designated competent person must ensure scaffold use requirements are maintained and inspected at the beginning of each work shift as per OSHA requirements. Contractor shall maintain documentation to support this requirement.

E. Contractor will ensure proper fall protection for employees is required and followed per OSHA requirements when using scaffolding and aerial lift.

F. Mudsills and surrounding areas at the base of ground-supported scaffolds shall be maintained in a well-dressed and level condition. Scaffold feet shall be installed on all legs and the maximum number of diagonal braces shall be included in every scaffold section.

G. Every work level shall be fully planked and toe board shall be included along open sides. Overhead protection shall be constructed where walk-through passages are allowed.

H. Brakes shall be secure at all times on rolling scaffolds, except when being moved. Workers shall not be allowed on the platform when the scaffold is being moved.

I. Rolling scaffolds shall not be used on uneven or unstable surfaces. Wheels shall be non-marking or temporarily covered with tape to prevent damage to floor surfaces when being moved through non-project areas.

ATTACHMENTS

1. ADM0175 Maintaining Indoor Air Quality During Construction and Renovation Activities Policy 20170418
2. Construction Risk Assessment Form ATT0321 20170616

END OF SECTION 01 35 25

SECTION 01 45 00 - PROJECT QUALITY CONTROL

PART 1- GENERAL

1.1. RELATED DOCUMENTS

1.1.1. The Contractor's attention is specifically directed, but not limited, to the Uniform General Conditions for University of Texas System Building Construction Contracts (UGC) for other requirements.

1.2. SUMMARY

1.2.1. This Section provides administrative and procedural requirements for Contractor quality control on the Project.

1.2.2. Specific quality-control requirements for individual construction activities are specified in the Sections that govern those activities. Requirements in those Sections may also cover production of manufactured products.

1.2.3. Specified tests, inspections, and related actions do not limit Contractor's quality-control procedures to fully comply with the Contract Document requirements in all regards.

1.2.4. Provisions of this Section do not limit the requirements for the Contractor to provide quality-control services required by the Contract Documents or the Authority Having Jurisdiction.

1.2.5. The following quality issues are addressed in detail in this Section:

1.2.5.1. (1.3) Quality Control

1.2.5.2. (1.4) Quality Assurance

1.2.5.3. (1.5) Contractor Employed Testing Agency

1.2.5.4. (1.6) Testing

1.2.5.5. (1.7) Inspections

1.2.5.6. (1.8) Preinstallation Meetings

1.2.5.7. (1.9) Mock-ups

1.3. QUALITY CONTROL

1.3.1. Quality Control shall be the sole responsibility of the Contractor, unless specifically noted otherwise. The Contractor shall be responsible for all testing, coordination, start-up, operational checkout, and commissioning of all items of Work included in the Project, unless specifically noted otherwise. All costs for these services shall be included in the Contractor's cost of work.

1.3.2. The Contractor shall assign one employee to be responsible for Quality Control. This individual may have other responsibilities but may not be the Contractor's Project superintendent or the Contractor's Project manager.

1.4. QUALITY ASSURANCE

1.4.1. The Owner or Owner's designated representative(s) will perform quality assurance. Owner's quality assurance procedures may include observations, inspections, testing, verification,

monitoring and any other procedures deemed necessary by the Owner to verify compliance with the Contract Documents.

1.4.1.1. The Owner's quality assurance testing and inspection program is separate from Owner's commissioning program, as defined in Section 01 91 00 –General Commissioning Requirements.

1.4.2. The Contractor shall cooperate with and provide assistance to the Owner related to Owner's quality assurance procedures. Contractor shall provide to Owner ladders, lifts, scaffolds, lighting, protection, safety equipment and any other devices and/or equipment (including operators if required) deemed necessary by the Owner to access the Work for observation/inspection.

1.4.3. Owner may employ independent testing agencies to perform certain specified testing, as Owner deems necessary. The Contractor shall integrate Owner's independent testing services within the Baseline Schedule and with other Project activities.

1.4.4. Owner's employment of an independent testing agency does not relieve the Contractor of the Contractor's obligation to perform the Work in strict accordance with requirements of the Contract Documents.

1.5. TESTING AGENCY

1.5.1. The Contractor shall employ and pay for services of an independent testing agency to perform all specified testing requiring an independent agency, unless specifically noted otherwise.

1.5.2. Contractor's employment of an independent testing agency does not relieve the Contractor of the Contractor's obligation to perform the Work in strict accordance with requirements of the Contract Documents.

1.5.3. The Contractor Employed Testing Agency:

1.5.3.1. The testing agency must have the experience and capability to conduct testing and inspecting indicated by ASTM standards and that specializes in the types of tests and inspections to be performed.

1.5.3.2. The testing agency shall comply with requirements of ASTM E 329, ASTM E 543, ASTM E 548, ASTM C 1021, ASTM C 1077, ASTM C 1093, and other relevant ASTM standards.

1.5.3.3. The testing agency's laboratory must maintain a fulltime engineer on staff to oversee and review the services. The engineer must be licensed in the State of Texas.

1.5.3.4. The testing agency must calibrate all testing equipment at reasonable intervals (minimum yearly) with accuracy traceable to either National Bureau of Standards or accepted values of natural physical constants.

1.5.4. The Contractor shall not employ the same testing entity engaged by the Owner for the Project, without the Owner's written approval.

1.6. TESTING

1.6.1. Where specific testing is specified in a technical section of the Specifications or indicated in the Contract Documents, the Contractor shall bear all costs of such tests unless the Owner has expressly agreed in writing to pay for the tests.

1.6.2. Testing specifically identified to be conducted by Owner, will be performed by an independent entity and will be arranged and paid for by the Owner unless otherwise indicated in the Contract Documents. Should the test return unacceptable results, the Contractor shall bear all costs of retesting and reinspection as well as the cost of all material consumed by testing, and replacement of unsatisfactory material and/or workmanship.

1.6.3. The Contractor in cooperation with the Owner's Construction Inspector shall schedule the Owner's testing services.

1.6.4. The Owner may engage additional consultants for testing, air balancing, commissioning, or other special services. The activities of any such Owner consultants are in addition to Contractor testing of materials or systems necessary to prove that performance is in compliance with Contract requirements. The Contractor must cooperate with persons and firms engaged in these activities.

1.6.4.1. The Contractor shall self-perform various tests to verify performance and/or operation of various systems. Test reports that document the tests shall be consecutively numbered and defined by scope and extent of the test. Copies of the test report forms can be obtained from the Owner. The following Owner test report forms are examples of forms that shall be used for this purpose and shall not be altered in any manner:

1.6.4.1.1. Pipe Test Report.

1.6.4.1.2. Duct Test Report.

1.6.4.1.3. Equipment or System Start-up/Request for Inspection.

1.6.4.1.4. Contractor's Request for Utility Shutdown.

1.6.4.1.5. Domestic Water Sterilization and Flushing Report.

1.7. INSPECTIONS

1.7.1. All of the Work is subject to inspection and verification of correct operation prior to 100% payment of the line item(s) pertaining to that aspect of the Work.

1.7.2. The Contractor shall incorporate adequate time for performance of all inspections and correction of noted deficiencies into the Work Progress Schedule for the Project.

1.7.3. During the course of construction, the Owner, Architect/Engineer, and/or other Owner representatives may visit the Site for observation of the Work in place. The Contractor shall provide all necessary personnel and/or equipment for safe access to the Work to be inspected or observed, regardless of frequency. This requirement shall extend to all Owner personnel and their representatives. Some of these inspections will be informal and some will require formal notification by the Contractor.

1.7.4. For any requested inspection, the Contractor shall complete prior inspections to ensure that items are ready for inspection and acceptance by the Owner and/or Architect/Engineer. The Contractor shall have on hand at the time of inspection, the latest updated version of the project Equipment Matrix. The Contractor shall be responsible for any and all costs incurred by Owner and/or Owner representatives, including consultants, resulting from a review or inspection that was scheduled prematurely.

1.7.5. The Contractor shall submit written notification to the Owner and Architect/Engineer a minimum of three (3) days and a maximum of eleven (11) days in advance of all requested inspections. Confirm advance notification time period with Owner for scheduling inspections.

1.7.6. The Contractor shall provide a system of tracking all field reports, describing items noted, and resolution of each item. The Owner will review reports on a monthly basis, or as necessary. Owner may require Contractor to track all inspection field reports within Owner's internet-based project management system.

1.7.7. The following are typical Project inspections:

1.7.7.1. Informal Daily Reviews of Project conditions by the Owner's Construction Inspector and/or members of the Project Team. When considered appropriate, results of these reviews will be documented via Observation Reports or Memorandum.

1.7.7.2. Concealed Space Inspections for subject areas that include partitions, structural walls, chases, crawl spaces, ceiling spaces, and any other Work, which will be difficult or impossible to examine once concealed in the final construction.

1.7.7.2.1. Contractor shall not enclose partitions, structural walls, chases, crawl spaces, ceiling spaces, and any other Work which will be difficult or impossible to examine once concealed in the final construction until Contractor has received written approval from Owner's Construction Inspector.

1.7.7.3. Progress Inspections for piping, ductwork, and other systems shall be scheduled by the Contractor through the Owner's Construction Inspector as appropriate portions, or sections, of the Work are completed. This is in addition to "system-wide" performance verification and tests. The Contractor shall schedule and document the tests using the standard Owner Pipe Test and Duct Test report forms. The Contractor shall conduct the tests and the Owner's Construction Inspector will witness and approve the results.

1.7.7.3.1. The Contractor shall coordinate their intended "apportioning" of systems tests with the Owner's Construction Inspector immediately following formal submission of their Work Progress Schedule so that all parties are aware of the intended Work and inspection sequence.

1.7.7.4. Overhead and Above Ceiling Inspections are similar in nature and requirements to the Concealed Space Inspections. Ceilings that are fixed in place, such as gypsum board or plaster, constitute a Concealed Space Inspection. Ceilings that are of "lay-in" type or where no finish ceiling is scheduled are considered an "overhead" inspection. Contractor shall include Overhead and Above Ceiling Inspections on the Work Progress Schedule.

1.7.7.4.1. No finish ceiling material shall be installed until all overhead Punchlist items have been resolved to the satisfaction of the Owner.

1.7.7.4.2. Completed Work in place necessary for an Overhead Inspection shall include all required infrastructure and appurtenances, inclusive of, but not limited to the following.

1.7.7.4.2.1. Installation of ceiling grid or framework.

1.7.7.4.2.2. Installation and operation of all above ceiling electrical Work, including light fixtures.

1.7.7.4.2.3. Installation of all HVAC and plumbing Work above ceiling with installation and connection of terminal units and air devices.

1.7.7.4.2.4. Installation of fire sprinkler heads.

1.7.7.4.2.5. Completion and Owner approval of all required tests for above ceiling Work.

1.7.7.5. Inspections of Building Systems and Equipment are intended to confirm acceptable operation. Contractor shall formally schedule inspections through the Owner's Construction Inspector and Architect/Engineer utilizing Owner's Inspection Request Form. Refer to Section 01 91 00 – General Commissioning Requirements and to Technical Specifications for additional requirements pertaining to system start-up, commissioning, operation, demonstration, and acceptance.

1.7.7.5.1. The Contractor shall perform a thorough checkout of operations with the manufacturer's representatives prior to requesting the formal inspection by the Owner. Contractor must notify the Owner's Construction Inspector, in advance, as to when the manufacturer's representative is scheduled to arrive at the Site.

1.7.7.5.2. For "building-wide" and/or life safety systems, such as emergency lighting, emergency power, uninterruptible power supply systems, fire alarm, fire sprinkler systems, smoke evacuation systems, toxic gas monitoring, captured exhaust systems, etc., the formal start-up inspection shall be completed prior to requesting Substantial Completion Inspection for any area of the Project.

1.7.7.5.3. The manufacturer's representatives and the installing contractor shall demonstrate both operation and compliance to the Owner's agents and consultants. If coordinated and scheduled appropriately by the Contractor, these equipment and/or systems inspections may also serve to provide the required Owner training, if approved in advance by the Owner.

1.7.7.6. A building systems final inspection with documented approval of individual equipment and/or system(s) must be accomplished prior to requesting Substantial Completion Inspection for any area affected by said equipment and/or system.

1.7.8. The Contractor is responsible for requesting that the Owner's Construction Inspector and Architect/Engineer arrange for the inspection of materials, equipment, and Work prior to assembly or enclosure that would make the materials, equipment, or Work inaccessible for inspection and at other times as may be required.

1.7.9. The Contractor shall coordinate the Work and schedule all inspections in advance so as not to delay the Work. All major inspections shall be indicated on the Work Progress Schedule for advance planning. Contractor shall allow a minimum of five (5) calendar days to confirm schedule of requested inspections with Owner's representatives.

1.8. PREINSTALLATION MEETINGS

1.8.1. The Contractor shall coordinate and conduct meetings to review the installation of major systems/equipment on the Project. As a minimum, Contractor shall schedule and conduct the Preinstallation Meeting(s) for the Work of each major building system. The Preinstallation Meeting(s) shall be convened following approval of system submittals and prior to commencement of system installation Work.

1.8.2. The purpose of the Preinstallation Meeting(s) is for the Contractor and all applicable subcontractors and/or suppliers and/or factory representatives to discuss all aspects of the installation of the particular system. Contractor shall direct special attention to the scheduled order of Work and any impact on or by any other building systems. Contractor shall develop a strategy acceptable to the Owner for start-up, inspection and acceptance, based on Contractor's Prefunctional Checklists, so that all parties are aware of what is expected and/or acceptable.

1.8.3. The Contractor shall ensure attendance of the installing subcontractor, manufacturer and/or supplier (if appropriate), supporting subcontractors involved in the installation, and any other parties involved in the phase of Work to be reviewed. Contractor shall notify the Owner and Architect/Engineer in writing at least five (5) days in advance of the Preinstallation Meeting(s).

1.8.4. Each party shall be prepared to discuss in detail the staging, installation procedure, quality control, testing/inspection, safety and any other pertinent items relating to the Work being reviewed. Submittal approval shall be a prerequisite of the Preinstallation Meeting(s). At this meeting(s), Contractor shall review and discuss the Commissioning Plan, test procedures, scheduling, and logistics. Contractor shall bring the following to the Preinstallation Meeting(s), as a minimum, for review and discussion:

1.8.4.1. Portion of the Initial Equipment Matrix applicable to the system under discussion.

1.8.4.2. Draft of the Prefunctional Checklists.

1.8.4.3. Current work schedule data pertaining to the beginning, start-up, inspection, and turnover phases anticipated for the particular system.

1.8.4.4. Copy of all approved submittals for the system.

1.8.5. The Contractor shall take minutes of the Preinstallation Meeting(s) and distribute to all attending parties.

1.8.6. Whether required in the Technical Specifications or not, a Preinstallation Meeting(s) shall be conducted for the following Work, if included in the Project:

1.8.6.1. Concrete.

1.8.6.2. Masonry.

1.8.6.3. Large Steel Fabrications.

1.8.6.4. Waterproofing.

1.8.6.5. Roofing.

1.8.6.6. Exterior Glazing (including storefront and curtain wall).

1.8.6.7. Door Hardware.

1.8.6.8. Audio / Visual Equipment.

1.8.6.9. Air Handling Units.

1.8.6.10. Medical Gas Systems.

1.8.6.11. All Other Mechanical and Electrical Systems.

1.9. MOCK-UPS

1.9.1. Before installing portions of the Work requiring mock-ups, Contractor shall build mock-ups for each form of construction and finish required, using materials indicated for the completed Work.

1.9.2. Build mock-ups in location and of size indicated or, if not indicated, as directed by Architect/Engineer. The mock-up may be work in place that is intended to remain, unless otherwise directed by the Owner.

1.9.3. Notify Architect/Engineer and Owner five (5) days in advance of dates, times, and locations of when and where mock-ups will be constructed.

1.9.4. Demonstrate the proposed range of aesthetic effects and workmanship. Demonstrate anticipated repairs in the mock-up, such as for stone veneer.

1.9.5. Obtain Architect/Engineer's and Owner's approval of mock-ups before starting work, fabrication, or construction.

1.9.6. Maintain mock-ups during construction in an undisturbed condition as a standard for judging the completed Work.

1.9.7. Demolish and remove mock-ups when directed by Owner, unless otherwise indicated.

1.9.8. As a minimum, Contractor shall prepare a mock-up for the following Work, if applicable to the Project. Owner may define additional mock-ups at the Pre-bid or Preconstruction Meeting.

1.9.8.1. Exterior wall system to include: substructure, masonry/stone veneer, plaster, architectural concrete and windows.

1.9.8.2. Roof system.

1.9.8.3. Interior laboratory room; utilities serving laboratory casework.

1.9.8.4. Interior patient care and prevention room.

1.9.8.5. Interior wall finishes.

1.9.8.6. Ceramic tile.

1.9.8.7. Finished flooring.

1.9.8.8. Plumbing battery for multiple-use toilet rooms.

1.9.8.9. Medical gas headwalls.

PART 2- PRODUCTS (NOT USED)

PART 3- EXECUTION (NOT USED)

END OF SECTION 01 45 00

SECTION 01 57 23 – TEMPORARY STORM WATER POLLUTION CONTROL

PART 1- GENERAL

1.1 DEFINITIONS

1.1.1 **BMP** – Best Management Practices.

1.1.2 **NOI & NOT** – Notice of Intent and Notice of Termination for TPDES permits.

1.1.3 **SWPPP** – Storm Water Pollution Prevention Plan

1.1.4 **TCEQ –** Texas Commission on Environmental Quality.

1.1.5 **TPDES –** Texas Pollutant Discharge Elimination System

1.1.6 **Large Construction Activities –** Construction activities including clearing, grading and excavating that result in land disturbance of equal to or greater than five (5) acres

1.1.7 **Small Construction Activities -** Construction activities including clearing, grading and excavating that result in land disturbance of equal to or greater than one (1) acre and less than five (5) acres of land.

1.1.8 **MS4 –** Municipal Separate Storm Sewer Systems: The City of Houston is the MS4 operator for MD Anderson's Houston Campus.

1.1.9 **SWQMP –** Storm Water Quality Management Plan

1.1.10 **EH&S** – MD Anderson Cancer Center's Environmental Health and Safety Department

1.2 RELATED DOCUMENTS AND APPLICABLE WORK

1.2.1 The TCEQ TPDES Construction General Permit No. TXR150000, March 5, 2008 and the project SWPPP. This specification requires compliance with all provisions of the TCEQ with regards to the TPDES permit. The TCEQ requirements currently pertain to large construction activities of five (5) acres or more and small construction activities which disturb one (1) to less than five (5) acres.

1.2.2 "The Storm Water Management Handbook for Construction Activities" developed by the City of Houston, Harris County and Harris County Flood Control District. The handbook provides information to engineers and contractors about TCEQ's TPDES General Permit requirements and about the City of Houston Ordinance Chapter 47 Article XII. The Ordinance has established rules to reduce construction-related pollutants in storm water runoff and effectively prohibit non-storm water discharges to the local storm sewer system.

1.2.3 Information to Respondents, Agreement, Uniform General Conditions for University of Texas System Building Construction Contracts (UGC) and Special Conditions shall be carefully read for provisions pertaining to this Work. In the event of conflict, the better quality or greater quantity shall prevail.

1.2.4 The Work described in this Section is applicable to any and all Sections of the Contract Documents. Any and all Work that would disturb the existing Site conditions or present the potential for site run-off shall adhere fully to this Specification Section.

1.2.5 Unless specifically notified to the contrary by the Owner, in writing, all aspects of this specification shall apply to this Project.

1.3 CONTRACTOR RESPONSIBILITIES

1.3.1 This project requires implementation of storm water "Best Management Practices" (BMP) for control devices and monitoring by the Contractor to comply with all provisions of the Storm Water Pollution Prevention Plan (SWPPP) developed for the Project by the licensed civil engineer. The Contractor must fulfill all Texas Pollutant Discharge Elimination System (TPDES) regulatory requirements, including the filing of a NOI and NOT and/or signing and posting of the Site Notices.

1.3.2 The Contractor shall provide signatures of a corporate Officer for the NOI, Site Notice, and NOT and any other forms or applications as required by the TPDES General Permit TXR150000. The Contractor shall also provide delegated authorization to sign reports per 30 TAC 305.128. Individuals conducting site inspections shall be qualified to the satisfaction of the Owner. Documented qualifications shall be included in the SWPPP booklet.

1.3.3 When the Contractor receives the approved SWPPP from the Owner, the Contractor signs the NOI and Site Notice (see Sample form in Part 4 of this Section) and forwards the NOI and Site Notice to the Owner. Two separate $325 application fees (one for the Owner and one for the Contractor) must accompany the NOI. The Owner signs his NOI and sends both NOI's and application fees to TCEQ. The Contractor shall insert a copy of the signed NOI or Site Notice into the SWPPP booklet to be kept at the Project Site. The $325 application fees are not required for Small Construction Sites.

1.3.4 The SWPPP booklet kept at the Project Site shall also contain the following:

1.3.4.1 A letter delegating signature authority to the field personnel for both the Contractor and the Owner.

1.3.4.2 A copy of TPDES permit when received.

1.3.4.3 A copy of the Site Notice (Large Construction Site Notice or Small Construction Site Notice for both the Primary and Secondary Operators).

1.3.5 The Contractor shall review the SWPPP and verify existing conditions at the Site before determining scope of implementation of site controls. Site survey and site plan drawings shall be used for additional reference. The Contractor shall notify the Owner, in advance, of this site review to allow for Owner participation.

1.3.6 The Contractor shall construct a Project SWPPP sign and place it at the main entrance to the Project Site. This sign shall include the NOI and TPDES permit along with the TCEQ TPDES Site Notice. The sign shall be constructed as detailed in the sample SWPPP sign drawing included in Part 4 of this Section.

1.3.7 Contractor shall contact the Owner's Designated Representative from the EH&S department for review of initial site controls in place prior to commencing site-disturbing activities, to ensure that any unusual circumstances or unforeseen site conditions with regard to erosion and sedimentation have been addressed. The Contractor shall complete the SWPPP Project Start-up form (see Sample in Part 4 of this Section)) and review it with the Owner before commencing soil disturbing activities. Both parties shall sign this form when the requirements listed in the SWPPP Project Start-up form have been met.

1.3.8 The Contractor shall provide all material, labor, equipment and services required to implement, maintain and monitor all erosion and sedimentation controls in compliance with the Storm Water Pollution Prevention Plan (SWPPP). All controls implemented by the Contractor shall comply with the Texas Pollutant Discharge Elimination System (TPDES) regulations as issued by the Texas Commission on Environmental Quality (TCEQ) on March 5, 2008. These controls shall remain in operation until project

completion and reestablishment of the Site or longer as directed by the Owner's Designated Representative. The work shall include, but not be limited to the following:

1.3.8.1 All earthwork as required to implement swales, dikes, basins and other excavations for temporary routing of utilities, to protect against erosion or sediment-laden ("polluted") storm water runoff.

1.3.8.2 All structural controls as shown or specified, including silt fences, sediment traps, stabilized construction entrance, subsurface drains, pipe slope drains, inlet/outlet protection, reinforced soil retention, gabions, rock berms, etc.

1.3.8.3 All non-structural controls as shown or specified, including temporary or permanent vegetation, mulching, geotextiles, sod stabilization, preservation of vegetative buffer strips, preservation/protection of existing trees and other mature vegetation.

1.3.8.4 All modifications and revisions to SWPPP necessary to meet changing site conditions and to address new sources of storm water discharges, as the work progresses.

1.3.8.5 All maintenance and repair of structural and non-structural controls in place shall continue until final stabilization is achieved or as directed by the Owner's Designated Representative.

1.3.8.6 Weekly site inspections, as required by the SWPPP, of pollutant sources, including hazardous sources, structural and non-structural controls, and all monitoring of SWPPP revisions and maintenance of inspection records.

1.3.8.7 Removal of all structural and non-structural controls as necessary upon completion, and only after final stabilization is achieved.

1.3.8.8 Filing of Notice of Termination (NOT) with the TECQ within 30 days of final stabilization being achieved, or of another Operator assuming control of the unstabilized portions of the Site.

1.3.8.9 Refer to the SWPPP for additional requirements to ensure compliance with TPDES regulations.

1.3.9 Certain construction activities such as the construction of underground stormwater conveyance and/or structural control systems at a construction site may require a Stormwater Quality Management (SWQ) permit from the City of Houston's Public Works & Engineering Department. The Contractor is responsible for applying for the SWQ permit, renewing the permit on an annual basis, operating and maintaining these systems according to the manufacturer's recommendations and industrial standards. Upon the completion of the construction activities, the Contractor shall transfer the ownership of the SWQ permit and associated documents such as engineering drawings and maintenance record to the owner.

.

1.4 QUALITY ASSURANCE

1.4.1 In order to minimize the discharge of pollutants to storm water, the Contractor shall implement all permanent and temporary Site controls according to Texas Pollutant Discharge Elimination System (TPDES) Guidelines, as set forth by the Texas Commission on Environmental Quality.

1.4.2 Implementation of site controls shall be performed by a qualified contractor experienced in the proper installation of such devices in accordance with manufacturers' specifications, and in keeping with recognized Best Management Practices (BMP's), and in keeping with TPDES regulations. Qualification of installing Contractor shall be reviewed with the Owner prior to entering into a contract with them for services.

1.4.3 The Contractor shall inspect all BMP's at regular intervals as specified in the Storm Water Pollution Prevention Plan for this project. Use standard Owner Inspection forms (see form in Part 4 of this Section) for each inspection. Record all deficiencies of site controls, and take immediate action to correct any deficiencies recorded. Keep records of inspections current and on file, available for review by EPA, TCEQ, MS4 operator and Owner.

1.5 SUBMITTALS

1.5.1 Submittals of products used in structural and non-structural controls shall be made through established procedures for review and approval by the Owner prior to installation on the Site. The Contractor shall make available physical samples and product literature on any material used in structural or non-structural controls during the course of the Project prior to its implementation in the field.

PART 2- PRODUCTS

2.1 MATERIALS

Specific site control devices are identified in the SWPPP. Where such devices are indicated, their material composition shall comply with this Section.

2.1.1 Materials to be used in structural and non-structural site controls shall include, but not be limited to the following:

2.1.1.1 **Silt Fences:** implemented to filter, and remove sediment from storm water shall be composed of the following materials:

a. Geotextile fabric – a non-woven, polypropylene, polyethylene, or polyamide fabric with non- raveling edges. It shall be non-biodegradable, inert to most soil chemicals, ultraviolet resistant, unaffected by moisture and other weather conditions, and permeable to water while retaining sediment. Fabric shall be 36 inches wide, with a minimum weight of 4.5 oz/yd.
b. Posts –steel fence posts shall be made of hot rolled steel, galvanized or painted, a minimum of 4 feet long, with a Y-bar or TEE cross-section of sufficient strength to withstand forces implied.
c. Wire Backing – a galvanized, 2”x4”, welded wire fencing, 12 gauge minimum. Width shall be sufficient to support geotextile fabric 24 inches above adjacent grades. Chain link fences located along the same lines as silt fences, may be use to support geotextile fabric. In this circumstance, the geotextile fabric shall be firmly attached to fence.

2.1.1.2 **Triangular Filter Dikes:** for use on surfaces or in locations where standard silt fence cannot be implemented, shall be composed of the following:

a. Geotextile fabric - a non-woven, polypropylene, polyethylene, or polyamide fabric with non-raveling edges. It shall be non-biodegradable, inert to most soil chemicals, ultraviolet resistant, unaffected by moisture and other weather conditions, and permeable to water while retaining sediment. Fabric shall be 36 inches wide, with a minimum weight of 4.5 oz/yd.
b. Dike Structure - 6 gauge, 6x6 welded wire mesh, 60 inches wide, folded into a triangular form. Each side shall be 18 inches with an overlap of 6 inches.
c. Ties – metal shoat rings or standard wire/cable ties for attachment of wire mesh to itself, and for attachment of geotextile fabric to wire mesh.

2.1.1.3 **Stabilized Construction Exit:** A steel grid that allows the safe passage of vehicles while agitating the tires to loosen and remove the soil build up. The grid or structures shall conform to the following:

a. It shall consist of pipes or tubes spaced such that there is a minimum clear distance between the pipes or tubes of 4 ½ inches. It shall be

elevated above the ground surface a minimum of 8 inches to allow water, debris and soil to drain.

b. Minimum diameter of pipe or tube shall be 3 inches.

c. It shall be designed to support any and all vehicles entering and leaving the construction site.

d. It shall be firmly placed in the ground at the exit.

e. It shall be of sufficient length so that the agitation will remove the soil from the tires or a minimum of 8'-0".

f. At the "street side" approach of the grid there shall be an impervious surface or it shall consist of 3 inch to 5 inch diameter angular crushed stone/rock approximately 5'-0" in length, minimum, and 8 inches deep, minimum. On the "job site" side of the grid, there shall be 3 inch to 5 inch diameter angular crushed stone/rock minimum 15"-0" in length, minimum 8 inches deep, The steel grid will be between the "street side" approach and the job site crushed stone/rock. All crushed stone/rock shall have filter fabric beneath the stone/rock. See diagram on Exhibit F.

g. Steel grid area shall be used as the tire wash area. When tire wash is in use (rainy or muddy days) the area shall be manned and the tires shall be washed using a high pressure hose/nozzle.

h. The area beneath the grid shall be sloped such that debris, soil and water shall be diverted back on to the construction site or to a sediment basin. No water, soil or debris shall leave the construction site. The resulting discharge shall be disposed of properly.

2.1.1.4 **Rock Berms**: shall be composed of the following materials:

a. Rock – clean open graded rock, with a maximum diameter of 3 inches.

b. Wire Mesh Support – a galvanized, woven wire sheathing having a maximum opening size of 1 (one) inch, and a minimum wire diameter of 20 gauge.

b. Ties – metal shoat rings or standard wire/cable ties.

2.1.1.5 Concrete Truck Washout (self installed): shall be used for containment of fluids from concrete truck washout wastes.

a. Gravel bags, concrete blocks or open graded rock

b. 10 mil plastic sheeting

2.1.1.6 Temporary Storage Tanks: shall be used for temporary storage of fuels on the construction Project Site

a. 2 inches of sand on the bottom of the containment area

b. 6 mil plastic sheeting

c. 2 inches of sand on top of the plastic sheeting

2.1.1.7 **Erosion Control Matting**: shall be used on steep slopes, in drainage swales, and in high traffic pedestrian areas of barren soil. It shall include one or more of the following:

a. Jute Mat – a plain fabric made of jute yarn, woven in a loose and simple manner, with a minimum unit weight of 2.7 pounds per square yard. Width shall be as required for the dimensions of the area to be covered.

b. Wood Fiber Mat – a mat composed of wood fibers, which are encased in nylon, cotton or other type of netting.

c. Synthetic Webbing Mat – a mat manufactured from polyvinyl chloride or polypropylene monofilaments, which are bonded together into a three-dimensional web to facilitate erosion control and/or re-vegetation.

2.1.1.8 **Organic Mulches**: shall be used for covering bare soil, retaining moisture under existing vegetation being preserved, and for absorbing the energy of compaction caused by foot or vehicular traffic. Mulch shall be one or more of the following:

a. Straw – from broken straw bales that are free of weed and grass seed where the grass from the seed is not desired vegetation for the area to be protected.
b. Wood Chips – from chipped limbs of cleared trees on site, or delivered in chipped form, in bulk quantities of pine, cedar or cypress. Wood chips of all species shall be partially decomposed to alleviate nitrogen depletion of the soil in areas where existing vegetation is to be preserved and protected.
c. Shredded Mulches – from pine, cypress or cedar, mechanically shredded, and capable of forming an interlocking mat following placement, and after sufficient wetting and drying has taken place naturally.

2.1.1.7 Any other materials indicated in SWPPP.

PART 3- EXECUTION

3.1 GENERAL

3.1.1 The Contractor shall provide a complete installation of all site control devices and measures (BMPs). Indicated in the SWPPP booklet, including the Site Erosion and Sedimentation Control Drawing and as specified herein. These BMPs must be confirmed as fully operational with the Owner before any Work that disturbs the Site can begin.

3.1.2 The Contractor shall provide all inspection and monitoring of controls in place and shall perform all revisions and updating of SWPPP booklet. An accurate, chronological record of all Contractor inspections revisions and additional controls shall be kept on file at the project Site, for review, with a copy of the SWPPP booklet.

3.1.3 The Contractor shall submit their Notice of Termination (NOT) to the TCEQ, with a copy to the Owner, after all disturbed areas are re-established (stabilized) with vegetative cover following completion of construction. Following acceptance of stabilized areas, all site controls that are no longer necessary shall be removed.

3.2 CONTROL DEVICES

Execution of specific site control devices is described in the following paragraphs. Refer to the SWPPP for applicable devices, extent and location.

3.2.1 SILT FENCE

3.2.1.1 Silt fences shall consist of non-woven geotextile fabric, attached to wire fabric backing to support the geotextile. The wire fabric should be galvanized 2” x 4” welded wire, 12-gauge minimum. Attach non-woven geotextile fabric to fence with shoat or standard cable/wire ties, leaving a “toe” of fabric at the bottom of the fence of not less than 6 (six) inches. Steel posts as specified shall be driven to a depth of 1 (one) foot minimum, and spaced not more than 6 (six) feet on center. Tilt posts slightly, in an “uphill” direction for additional strength. Attach fencing to posts with standard cable/wire ties. Dig a 6 (six) inch deep by 6 (six) inch wide trench on the disturbed side of the fence, bury geotextile fabric in trench, backfill and tamp. Abutting ends of geotextile fabric shall be overlapped a minimum of 12 (twelve) inches.

3.2.1.2 Maintain silt fence daily as necessary to repair breaches in geotextile fabric. Maintain steel posts as specified in tilted condition. When siltation has occurred, it shall be

removed when it has reached a depth of 6 (six) inches. Silt that has been removed shall be disposed of off-site.

3.2.1.3 Remove silt fence when the disturbed areas protected by silt fence have been completely stabilized as specified. Minimize site disturbance while removing silt fence and posts.

3.2.2 CURB INLET PROTECTION

3.2.2.1 Cover curb storm inlet with non-woven geotextile fabric covered wire fabric. Wire fabric to be 2"X4" – W1.4XW1.4. Extend fabric 2 (two) feet beyond inlet opening at each end and 12" (twelve) in front of opening in the gutter. Remove strip of filter fabric apx. 2 1/2" (two and one half) high for the length of the protection to act as overflow. Extend fabric over the top of opening to allow placement of gravel bags. Anchor fabric with 20 lb. gravel bags placed 3 (three) feet on center.

3.2.2.2 Maintain inlet protection daily as necessary to repair breaches in geotextile fabric. When siltation has occurred, it shall be removed when it has reached a depth of 2 (two) inches. Silt that has been removed shall be disposed of off-site.

3.2.3 STABILIZED CONSTRUCTION EXIT

3.2.3.1 A steel grid that allows the safe passage of vehicles while agitating the tires to loosen and remove the soil build-up. The grid or structures shall conform to the following:

a. It shall consist of pipes or tubes spaced such that there is a minimum clear distance between the pipes or tubes of 4-½ inches. It shall be elevated above the ground surface a minimum of 8 inches to allow water, debris and soil to drain.
b. Minimum diameter of pipe or tube shall be 3 inches.
c. It shall be designed to support any and all vehicles entering and leaving the construction site.
d. It shall be firmly placed in the ground at the exit.
e. It shall be of sufficient length so that the agitation will remove the soil from the tires or a minimum of 8'-0".
f. At the "street side" approach of the grid there shall be an impervious surface or it shall consist of 3 to 5 inch diameter angular crushed stone/rock approximately 5'-0" in length, minimum, and 8 inches deep, minimum. On the "job site" side of the grid, there shall be 3 to 5 inch diameter angular crushed stone/rock 15'-0" in length, minimum 8 inches deep. The steel grid will be between the "street side" approach and the job site crushed stone/rock. All crushed stone/rock shall have filter fabric beneath the stone/rock. See diagram on Exhibit F.
g. Steel grid area shall be used as the tire wash area. When tire wash is in use (rainy or muddy days) the area shall be manned and the tires shall be washed using a high pressure hose/nozzle.
h. The area beneath the grid shall be sloped such that debris, soil and water shall be diverted back on to the construction site or to a sediment basin. No water, soil or debris shall leave the construction site. The resulting discharge shall be disposed of properly.

3.2.4 ROCK BERM

3.2.4.1 Rock berm shall consist of rip-rap type rock, secured within wire sheathing as specified, and installed at the toe of slopes, or at the perimeter of developing or disturbed areas. Height of berm shall be a minimum of 18 (eighteen) inches from top of berm to uphill toe of berm. Top width shall be a minimum of 24 (twenty four) inches, with side slopes of 2:1 or flatter. Uphill toe of berm shall be buried a minimum of 4 (four) inches into existing grade. Rock berm shall have a minimum flow-through rate of 60 (sixty) gallons per minute, per square foot of berm face.

3.2.4.2 Maintain rock berm in a condition that allows the sediment to be removed, when the depth of sediment has reached 1/3 (one third) the height of the berm. Berm shall be reshaped as needed, and silt buildup removed, to maintain specified flow through berm.

3.2.4.3 Rock berm shall be removed when the disturbed areas served have been stabilized as specified.

3.2.5 CONCRETE TRUCK WASHOUT (SELF INSTALLED)

3.2.5.1 Concrete Truck Washout (self installed) shall be constructed so that it will be able to accommodate the maximum number of anticipated concrete trucks that will be cleaned on any given day at any given time using 7 gallons of water being used for washout per truck or 50 gallons of water being used to wash out pump trucks. The area utilized to contain the wash water and concrete solids cleaned from the trucks will be a minimum of 10 feet in width. The containment area will be covered with 10 mil plastic sheeting without any holes or tears and the seams shall be sealed according to manufacturer's recommendations. The gravel bags, concrete blocks or open graded rocks shall line the outside perimeter and shall be double wrapped with the 10 mil plastic sheeting to prevent any potential for runoff from the containment area.

3.2.5.2 The concrete truck washout containment area shall be maintained in a condition that will not allow concrete build up within the containment area to exceed 50 percent of the storage capacity.

3.2.5.3 Washout of concrete trucks during rainfall events shall be minimized.

3.2.5.4 If a SWPPP is required to be implemented, the SWPPP shall include concrete washout areas on the associated map.

3.2.5.5 The concrete truck washout area will be removed when it is no longer necessary to wash out concrete trucks on the site.

3.2.6 TEMPORARY STORAGE TANKS

3.2.6.1 Must be located in a bermed containment area. The berm must be a minimum 3 feet in all directions, and the height of the berm must contain the maximum contents of the largest tank plus 8 inches (approximately 110 percent of the tank capacity). The containment area is constructed by beginning with a 2 inch sand pad, and then covered with 6 mil plastic or rubber sheeting. The sheeting is then covered with another 2 inch layer of sand. The plastic sheeting is secured to the outer berm.

3.2.6.2 Storage tanks are to be placed no closer than 50 feet from a building or property line.

3.2.6.3 If using tanks with a gravity feed type set up, the containment must be of sufficient size to be able to contain the tank if it should fall over.

3.2.6.4 There must be a fusible link at the valve that will shut off the flow to the hose in the event of a fire.

3.2.6.5 There must be sufficient cover for the tank and the containment area to prevent potential stormwater runoff.

3.2.6.6 The area within the containment area is to be kept free and clear of spills, if a spill occurs then the sand is to be removed and replace with a fresh layer of sand.

3.2.6.7 The storage tank containment area is to be removed from the site once it has been determined that it will no longer be used on the construction site.

3.2.7 DIVERSION DIKE

3.2.7.1 Diversion dikes shall be formed and shaped using compacted fill, and shall not intercept runoff from more than 10 (ten) acres. Dike shall have a minimum top width of 24 (twenty

four) inches, and a minimum height of 18 (eighteen) inches. Soil shall have side slopes of 3:1 or flatter, and shall be placed in 8 (eight) inch lifts. Compact soil to 95 percent standard proctor density. Where protected slopes exceed 2 (two) percent, the uphill side of diversion dike shall be stabilized with crushed stone or erosion control matting – to a distance of not less than 7 (seven) feet from toe of dike. The channel, which is formed by the diversion dike, must have positive drainage for its entire length to a stabilized outlet, such as a rock berm, sandbag berm, or stone outlet structure. Storm water shall not be allowed to overflow the top of diversion dike at any point other than the stabilized outlet.

3.2.7.2 Maintain diversion dike in a condition that allows the storm water runoff to be diverted away from exposed slopes. Repair any failures at top of dike and remove sediment as necessary behind dike to allow positive drainage to a stabilized outlet.

3.2.7.3 Remove diversion dike when the expose slopes being protected are stabilized with vegetation or other permanent cover.

3.2.8 INTERCEPTOR SWALE

3.2.8.1 Interceptor swale shall be implemented to prevent on or off-site storm water from entering a disturbed area, or prevent sediment-laden runoff from leaving the Site or disturbed area. Interceptor swale shall be excavated as required by the SWPPP drawing/s, with side slopes of 3:1 or flatter. This shall include all labor and equipment associated with the installation and maintenance of the swale as shown on the construction documents. Constructed swale may be v-shaped or trapezoidal with a flat bottom, depending on the volume of water being channeled. Sediment laden runoff from swale shall be directed to a stabilized outlet or sediment-trapping device. Flow line of swale shall have a continuous fall for its entire length and shall not be allowed to overflow at any other point/s along its length.

3.2.8.2 Maintain interceptor swale in a condition that allows the storm water runoff to be channeled away from disturbed areas. Remove sediment in swale as necessary to maintain positive drainage to a stabilized outlet.

3.2.8.3 Fill in or remove swale after the disturbed area/s being protected are completely stabilized as specified.

3.2.9 EROSION CONTROL MATTING

3.2.9.1 Remove all rocks, debris, dirt clods, roots, and any other obstructions, which would prevent the matting from lying in direct contact with the soil. 6 inch by 6 inch anchor trenches shall be dug along the entire perimeter of the installation. Bury matting in trenches, backfill and compact. Fasten matting to the soil using 10 gauge wire staples, 6 inches in length and 1 inch wide. Use a minimum of one staple per 4 square feet of matting, and at 12 inches on center along all edges. Install parallel to flow of water and overlap joining strips a minimum of 12 inches.

3.2.9.2 Maintain erosion control matting by repairing any bare spots. Missing or loosened matting shall be promptly replaced or re-anchored.

3.2.9.3 Remove matting where protection is no longer required. In areas where permanent vegetation is established along with matting, matting can be left in place permanently.

3.2.10 MULCHES

3.2.10.1 Apply specified mulches in areas identified on the SWPPP, to a depth of 3 inches or as otherwise specified on the SWPPP drawing/s.

3.2.11 BPM DETAILS

3.2.11.1 Refer to Exhibits at the end of this Specification for the following BMP details:

3.2.6.1.1 Exhibit “A” Area Inlet Detail

3.2.6.1.2 Exhibit “B” Curb Inlet Detail

3.2.6.1.3 Exhibit “C” Rock Berm Detail
3.2.6.1.4 Exhibit “D” Silt Fence Detail
3.2.6.1.5 Exhibit “E” Triangular Dike Detail
3.2.6.1.6 Exhibit “F” Stabilized Construction Exit
3.2.6.1.7 Exhibit “G” Concrete Truck Washout

3.3 INSPECTIONS AND RECORD KEEPING

3.3.1 Contractor shall inspect all BMP’s on 7-day intervals and within 24-hours at the end of a major storm event totaling 0.5 inches of rainfall or greater, with the Owner’s Designated Representative, who is also required by TPDES to regularly inspect the site. Use standard Owner Inspection forms (see form in Part 4 of this Section) for each inspection. Record all deficiencies of site controls, and take appropriate action to correct any deficiencies recorded. Exception is rock berms located in a streambed. Any rock berm located in a streambed shall be inspected on a daily basis. Keep records of inspections current and on file, available for review by EPA, TCEQ, MS4 operator Representative and/or Owner’s Representative/s.

3.3.2 Contractor shall keep records of all Contractor inspections on file with SWPPP booklet at the Project Site, and make available for review by Owner’s Representative(s) or EPA, TCEQ or MS4 operator officials requesting review of SWPPP inspection records. One copy of each inspection report shall be delivered to the Owner’s Designated Representative.

3.3.3 Contractor shall keep records of all major grading and stabilization activities on file with the SWPPP booklet at the project site and make available for review by owner’s representative(s), EPA, TCEQ, or MS4 operator officials requesting review of the SWPPP.

3.3.4 Contractor shall submit copies of all inspection records and the Major Grading and Stabilization Log along with SWPPP booklet, to the Owner’s Designated Representative at project completion.

3.4 MAINTENANCE

3.4.1 All erosion and sediment control measures and other protective measures identified in the SWPPP must be maintained in effective operating condition. If through inspections the permittee determines that BMP’s are not operating effectively, maintenance must be performed before the next anticipated storm event or as necessary to maintain the continued effectiveness of storm water controls.

3.4.2 If maintenance prior to the next anticipated storm event is impracticable, maintenance must be scheduled and accomplished as soon as practicable. Erosion and sediment controls that have been intentionally disabled, run-over, removed or otherwise rendered ineffective must be replaced or corrected immediately upon discovery.

PART 4- SAMPLE FORMS

4.1 The Contractor shall use the following forms or sketches in the execution of the work in this Section, in compliance with TPDES requirements and the SWPPP. Contact the Owner’s representative for useable copies of the Owner-furnished forms:

- City of Houston forms (weblink -- http://cleanwaterways.org/downloads/)
- MD Anderson Cancer Center SWPPP Project Start-up Form
- MD Anderson Cancer Center SWPPP Inspection Form (Template)
- Major Grading and Stabilization Activities Log

- SWPPP Posting Sign for Main Construction Entrance for large construction site (5 acres or greater)
- SWPPP Posting Sign for Main Construction Entrance for small construction site (1 to less than 5 acres)

4.2 Retrieve the most current TCEQ forms directly from the TCEQ website:

http://www.tceq.state.tx.us/permitting/water_quality/stormwater/TXR15_5_plus_steps.html

- TCEQ TPDES Notice of Intent (NOI) (weblink - http://www.tceq.state.tx.us/assets/public/permitting/waterquality/forms/20022.pdf)

- TCEQ TPDES Large Construction Site Notice (weblink -- http://www.tceq.state.tx.us/assets/public/permitting/waterquality/attachments/stormwater/txr15largepri.pdf)

- TCEQ TPDES Small Construction Site Notice (weblink -- http://www.tceq.state.tx.us/assets/public/permitting/waterquality/attachments/stormwater/txr15smallsite.pdf)

- TCEQ TPDES Notice of Termination (NOT) (weblink -- http://www.tceq.state.tx.us/assets/public/permitting/waterquality/forms/20023.pdf)

END OF SECTION 01 57 23

MD Anderson Cancer Center
Facilities Planning Design and Construction
1515 Holcombe Boulevard Mail Box 703, Houston, Texas 77030
(713) 792--2207 FAX (713) 796-9935

SWPPP Project Start-up

Contractors must meet four (4) TPDES requirements before soil-disturbing activities can commence on Owner construction projects. This form provides the Contractor and Owner an acceptance of compliance with initial BMP's and required paperwork for commencement of work on the project site.

The Contractor is to initial items that are certified as complete and then review for concurrence with the Owner's Designated Representative.

1 **Best Management Practices (BMP's) applicable to this project have been inspected to ensure correct placement in accordance with the SWPPP and for proper installation according to specifications.**

_____ _____
Initial by Contractor *Initial by Owner*

2 **The approved Storm Water Pollution Prevention Plan (SWPPP) is approved and on site.**

_____ _____
Initial by Contractor *Initial by Owner*

3 **The TCEQ NOI and Site Notice forms (and permits if received) or the TCEQ CSN's are complete and posted for all permittees at the main entrance to the project site.**

_____ _____
Initial by Contractor *Initial by Owner*

4 **Inspector qualifications and letter of delegation of authority are inserted in the SWPPP.**

_____ _____
Initial by Contractor *Initial by Owner*

Having met the above requirements and in recognition of prior receipt of Notice to Proceed, the Contractor is authorized to commence work on site.

_____ CPM Project #_____
Contractor

_____ Date: _____
Owner's Designated Representative

MD Anderson Cancer Center
Facilities Planning Design and Construction
1515 Holcombe Boulevard Mail Box 703, Houston, Texas 77030
(713) 792--2207 FAX (713) 796-9935

SWPPP Inspection Report

Project Name: _____ **CPM Project #:** _____

Contractor: _____ **Date of Inspection:** _____

Inspection Conducted by: _____ _____

Printed Name ***Signature***

Qualifications of the Inspector: _____

Report prepared by: *(Circle One)* **Contractor** **Owner**

Inspection Issue	**Y**	**N**	**N/A**	**Comments**
Are TPDES NOI's, permits, or CSN's for all permittees posted at the construction entrance?				
Is contact information for all permittees posted at the construction entrance?				
Are copies of inspection reports for all permittees included with the SWPPP?				
Is a copy of the NOI, TPDES Permit and Posting Notice or CSN for all permittees included with SWPPP?				
If the BMP's have been modified, has the SWPPP been modified?				
Is the major grading and stabilization activities log current				
Are there any signs of discharge leaving the site?				
Are all BMP's functioning as intended?				
Any additional BMP's required?				
Are stabilized entrances/exits preventing street contamination?				
Are any BMP's in need of repair and/or maintenance?				
Are any hazardous materials being exposed to storm water runoff?				

Inspection Issue	Y	N	N/A	Comments
Have there been any reportable spills of hazardous materials?				
Have all areas of the site not covered by impervious materials achieved the required coverage?				
Are all soil-disturbing activities complete?				
Has a Notice of Termination (NOT) been filed?				

NOTE: All items of non-compliance shall be repaired/installed within seven (7) calendar days of inspection. Repairs/installation shall be completed immediately, if storm conditions are imminent.

Note incidents of non-compliance:_____

_____

_____

_____

_____

_____

"I certify under penalty of law that this document and all attachments were prepared under my direction or supervision in accordance with a system designed to ensure that qualified personnel properly gathered and evaluated the information submitted. Based on my inquiry of the person or persons who manage the system, or those persons directly responsible for gathering the information, the information submitted is, to the best of my knowledge and belief, true, accurate, and complete. I am aware that there are significant penalties for submitting false information, including the possibility of fine and imprisonment for knowing violations."

Signature: _____ Date: _____

Printed Name: _____

Title: _____

MD Anderson Cancer Center
Facilities Planning Design and Construction
1515 Holcombe Boulevard Mail Box 703, Houston, Texas 77030
(713) 792--2207 FAX (713) 796-9935

Storm Water Pollution Prevention Plan
Major Grading and Stabilization Activities Log

Start Date	End Date*	Type and Location of Activity

***End Date does not pertain to stabilization activities**

S W P P P

NOI

PERMIT

SITE NOTICE

MINIMUM SIGN SPECIFICATIONS: 5 Acre or Greater Sites

SIGN:	**Exterior grade ¾ inch plywood, cut 4' x 4', with red painted letters, background painted white – DISPLAY ON CONSTRUCTION FENCE AT MAIN ENTRANCE TO PROJECT SITE.**
S W P P:	**10 inch painted letters, 3 inches from top of sign, centered**
CONTRACTOR OWNER:	**3 inch painted letters, 4 inches below SWPPP letters, centered on each half of sign**
NOI, PERMIT, CONTACT:	**8-1/2 X 11 TCEQ forms, laminated beyond edges of documents, stapled to plywood.**

S W P P P

SITE NOTICE

MINIMUM SIGN SPECIFICATIONS:	**1 to Less Than 5 Acre Sites**
SIGN:	**Exterior grade ¾ inch plywood, cut 4' x 4', with red painted letters, background painted white – DISPLAY ON CONSTRUCTION FENCE AT MAIN ENTRANCE TO PROJECT SITE.**
S W P P P:	**10 inch painted letters, 3 inches from top of sign, centered**
CONTRACTOR OWNER:	**3 inch painted letters, 4 inches below SWPPP letters, centered on each half of sign**
CONSTRUCTION SITE NOTICE:	**8-1/2 X 11 TCEQ forms, laminated beyond edges of documents, stapled to plywood.**

EXHIBIT "A"
Area Inlet Detail

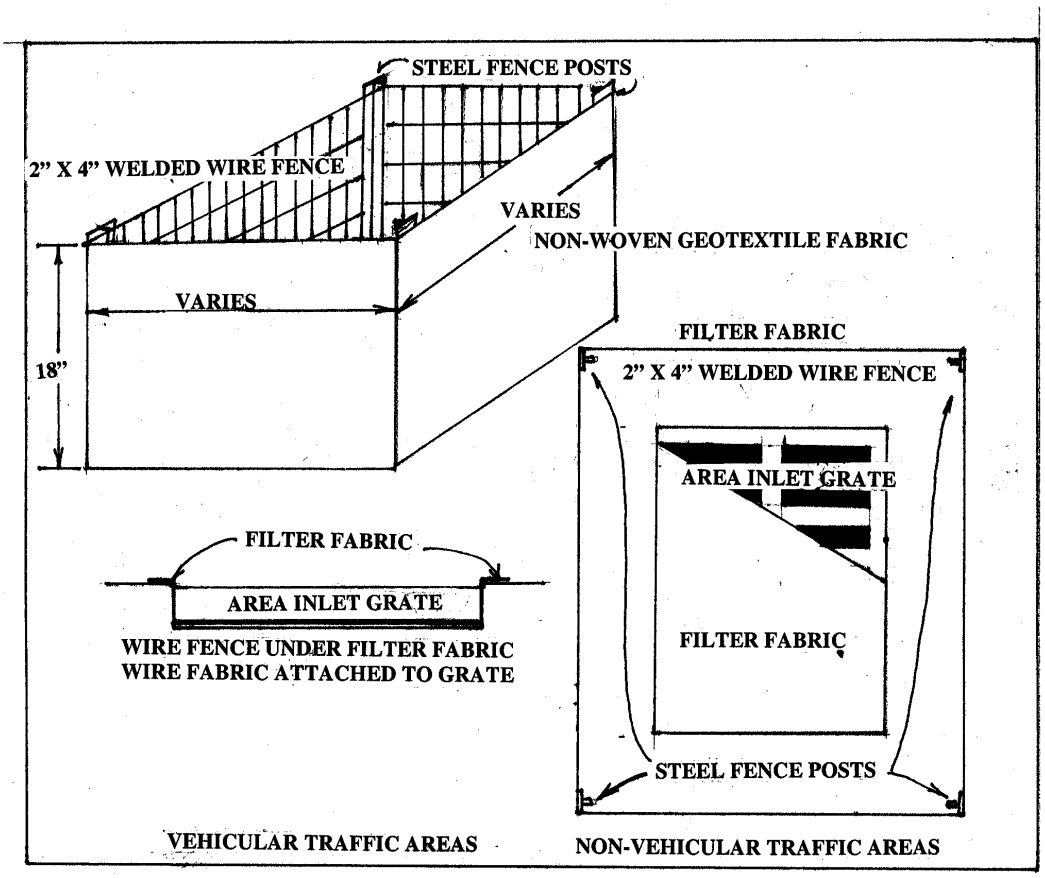

AREA INLET PROTECTION

1. STEEL POSTS THAT SUPPORT THE SILT FENCE SHALL BE INSTALLED AT EACH CORNER AND IN BETWEEN CORNERS IF THE DISTANCE IS GREATER THAN 6' BETWEEN CORNER POSTS.

2. USE SILT FENCE DETAIL FOR INSTALLATION OF THE SILT FENCE AROUND THE AREA INLET.

3. THE METAL AREA INLET GRATE SHALL BE LIFTED AND FILTER FABRIC WRAPPED AROUND THE GRATE AND THE GRATE SHALL BE REPLACED.

4. IN VEHICULAR TRAFFIC AREAS THE METAL GRATE SHALL BE LIFTED OUT AND WIRE FENCE MATERIAL SHALL BE PLACED UNDER IT WITH FILTER FABRIC PLACED BETWEEN THE GRATE AND THE WIRE FENCE. THE WIRE FENCE SHALL THEN BE ATTACHED TO THE GRATE .

5. ACCUMULATED SILT SHALL BE REMOVED WHEN THE FILTER FABRIC OVER THE GRATE COMPLETELY COVERS THE GRATE AREA, AND THE SILT AROUND THE SILT FENCE REACHES A HEIGHT OF 6"

6. AREA INLET PROTECTION SHALL BE REMOVED WHEN THE SITE IS COMPLETELY STABILIZED.

EXHIBIT "B"
Curb Inlet Detail

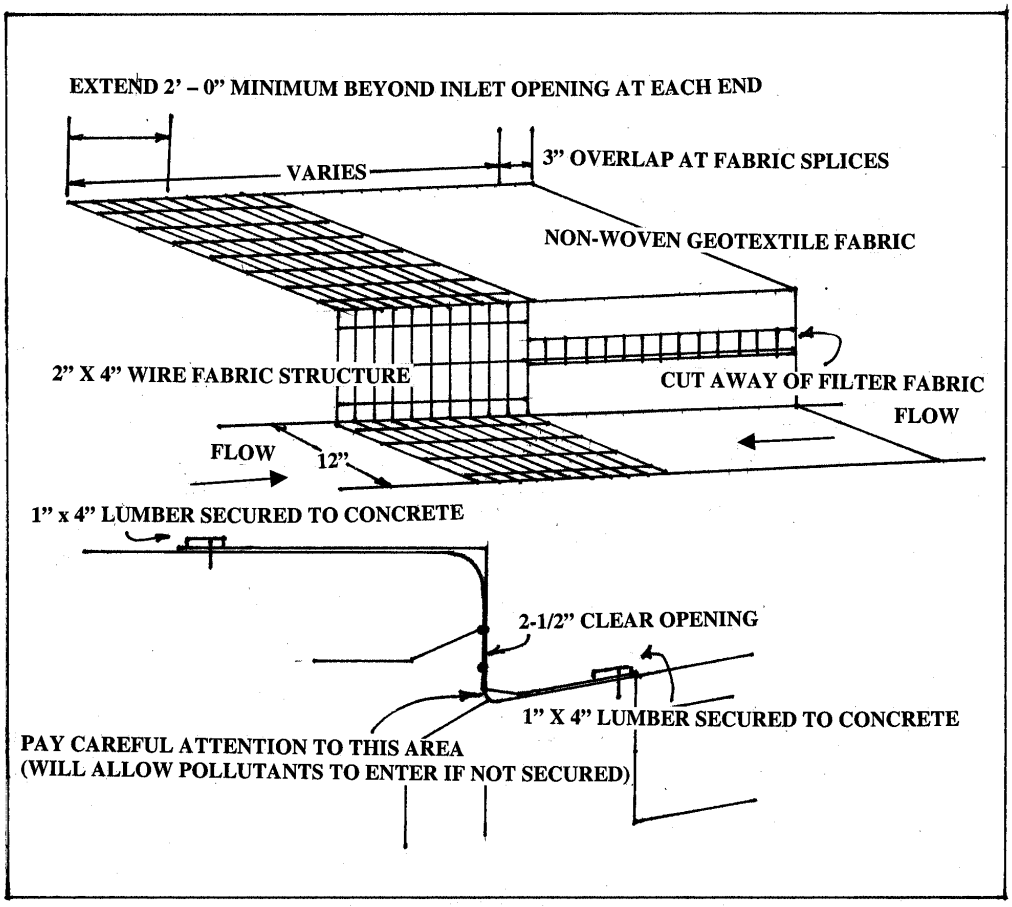

CURB INLET PROTECTION

1. WHERE MINIMUM CLEARANCES CAUSE TRAFFIC TO DRIVE IN THE GUTTER, USE 1" X 4" LUMBER SECURED WITH CONCRETE NAILS 3' O.C. NAILED INTO THE CONCRETE. IF PEDESTRIAN TRAFFIC ONLY THE USE OF 20# GRAVEL BAGS TO SECURE MATERIAL IS PERMITTED.
2. AS SECTION OF FILTER FABRIC SHALL BE REMOVED AS SHOWN IN THIS DETAIL. FABRIC MUST BE SECURED TO WIRE BACKING WITH CLIPS OR HOG RINGS AT THIS LOCATION.
3. DAILY INSPECTION SHALL BE MADE AND SILT ACCUMULATION MUST BE REMOVED WHEN DEPTH REACHES 2".
4. THE PERFORMANCE OF THE INLET PROTECTION SHALL BE MONITORED DURING EACH RAINFALL EVENT AND PROTECTION SHALL BE IMMEDIATELY REMOVED IF THE STORMWATER BEGINS TO OVERTOP THE CURB.
5. INLET PROTECTION SHALL BE REMOVED AS SOON AS THE SOURCE OF SEDIMENT IS STABILIZED.

EXHIBIT "C"
Rock Berm Detail

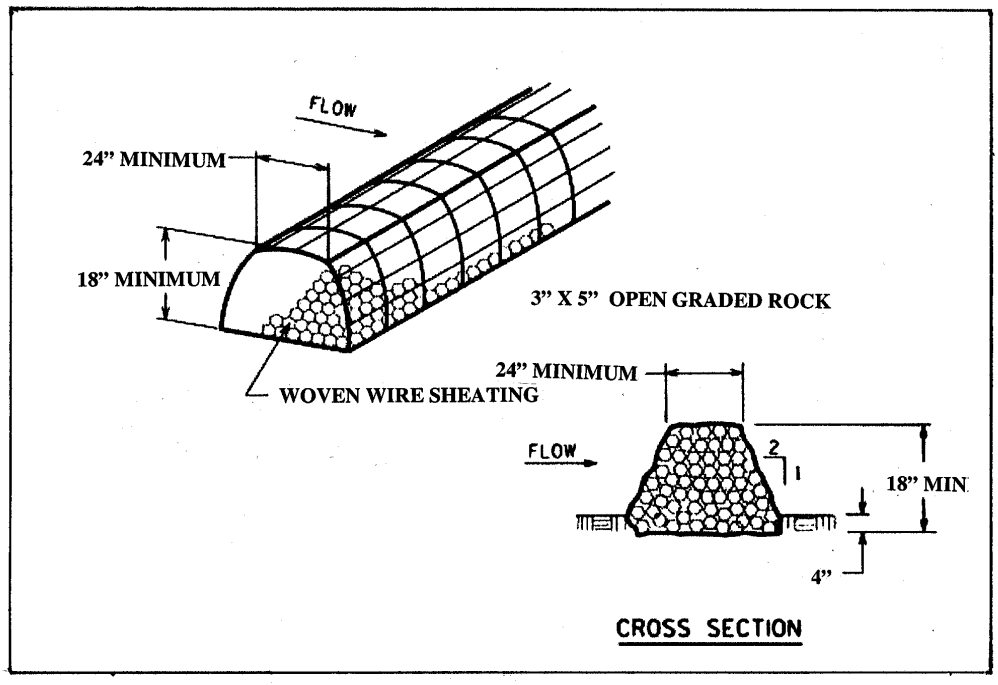

ROCK BERM

1. USE ONLY OPEN GRADED ROCK (4" X 8") FOR STREAM FLOW CONDITIONS. USE OPEN GRADED ROCK (3" X 5") FOR OTHER CONDITIONS

2. THE ROCK BERM SHALL BE SECURED WITH A WOVEN WIRE SHEATHING HAVING A MAXIMUM 1" OPENING AND A MINIMUM WIRE DIAMETER OF 20 GA. ROCK BERMS IN CHANNEL APPLICATIONS SHALL BE ANCHORED FIRMLY INTO THE SUBSTRATE A MINIMUM OF 6" WITH TEE POSTS OR WITH #5 OR #6 REBAR, WITH A MAXIMUM SPACING OF 48" ON CENTER.

3. THE ROCK BERM SHALL BE INSPECTED WEEKLY AND THE STONE AND/OR FABRIC CORE-WOVEN SHEATHING SHALL BE REPLACED WHEN THE STRUCTURE CEASES TO FUNCTION AS INTENDED; DUE TO SILT ACCUMULATION AMONG THE ROCKS, WASHOUT, CONSTRUCTION TRAFFIC, ETC.

4. WHEN SILT REACHES A DEPTH EQUAL TO ONE-THIRD THE HEIGHT OF THE BERM OR 6" WHICHEVER IS LESS, THE SILT SHALL BE REMOVED AND DISPOSED OF ON AN APPROVED SITE AND IN A MANNER THAT WILL NOT CREATE A SILTRATION PROBLEM.

5. DAILY INSPECTION SHALL BE MADE ON SEVERE-SERVICE ROCK BERMS; SILT SHALL BE REMOVED WHEN ACCUMLUATION REACHES 6"

6. WHEN THE SITE IS COMPLETELY STABILIZED, THE ROCK BERM AND ACCUMULATED SILT SHALL BE REMOVED AND DISPOSED OF IN AN APPROVED MANNER.

EXHIBIT "D"
Silt Fence Detail

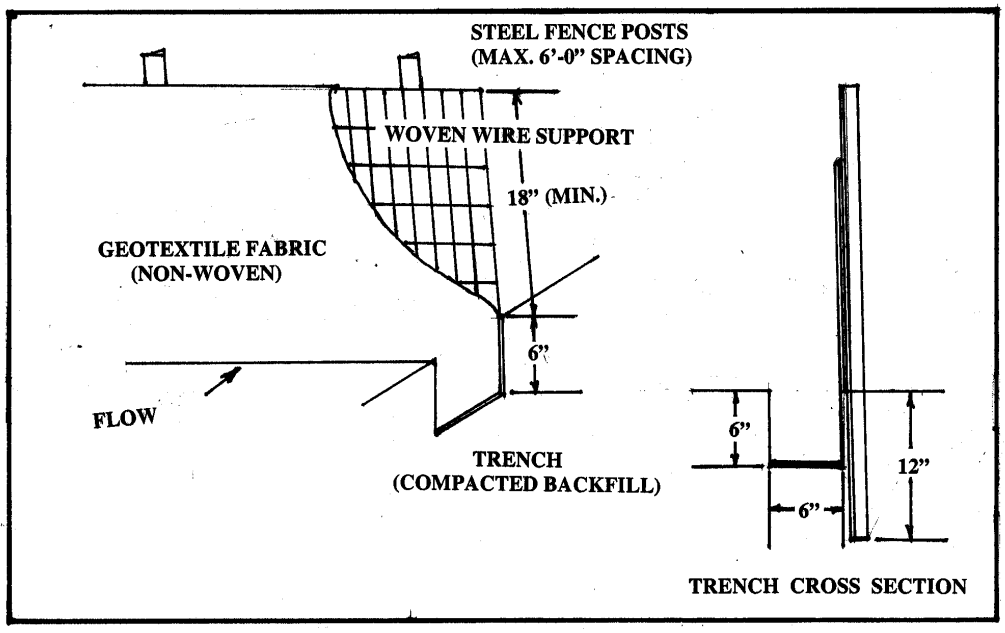

SILT FENCE DETAIL

1. STEEL POSTS WHICH SUPPORT THE SILT FENCE SHALL BE INSTALLED ON A SLIGHT ANGLE TOWARD THE ANTICIPATED RUNOFF SOURCE. POSTS MUST BE EMBEDDED A MINIMUM OF 12"

2. THE TOE OF THE SILT FENCE SHALL BE TRENCHED IN WITH A SPADE OR MECHANICAL TRENCHER, SO THAT THE DOWNSLOPE FACE OF THE TRENCH IS FLAT AND PERPENDICULAR TO THE LINE OF THE FLOW. WHERE FENCE CAN NOT BE TRENCHED INTO THE SURFACE (e. g. PAVEMENT) THE FABRIC SHALL BE WEIGHTED DOWN WITH ROCK OR 1" X 4" LUMBER SECURELY FASTENED TO THE SURFACE, ON THE UPSTREAM SIDE TO PREVENT FLOW UNDER THE FENCE.

3. THE TRENCH MUST BE A MINIMUM OF 6" DEEP AND 6" WIDE TO ALLOW FOR THE FILTER FABRIC TO BE LAID IN THE GROUND AND BACKFILLED WITH COMPACTED MATERIAL.

4. THE FILTER FABRIC SHALL BE SECURELY FASTENED TO THE WOVEN WIRE BACKING, WHICH IN TURN IS SECURELY FASTENED TO THE STEEL FENCE POST.

5. ACCUMLUTATED SILT SHALL BE REMOVED WHEN IT REACHES A DEPTH OF 6". THE SILT SHALL BE DISPOSED OF ON AN APPROVED SITE AND IN SUCH A MANNER THAT WILL NOT CONTRIBUTE TO ADDITIONAL SILTRATION.

6. INSPECTION SHALL BE MADE WEEKLY AND REPAIR OR REPLACEMENT SHALL BE MADE PROMPTLY, IF NEEDED.

7. SILT FENCE SHALL BE REMOVED WHEN THE SITE IS COMPLETELY STABILIZED.

EXHIBIT "E"
Triangular Dike Detail

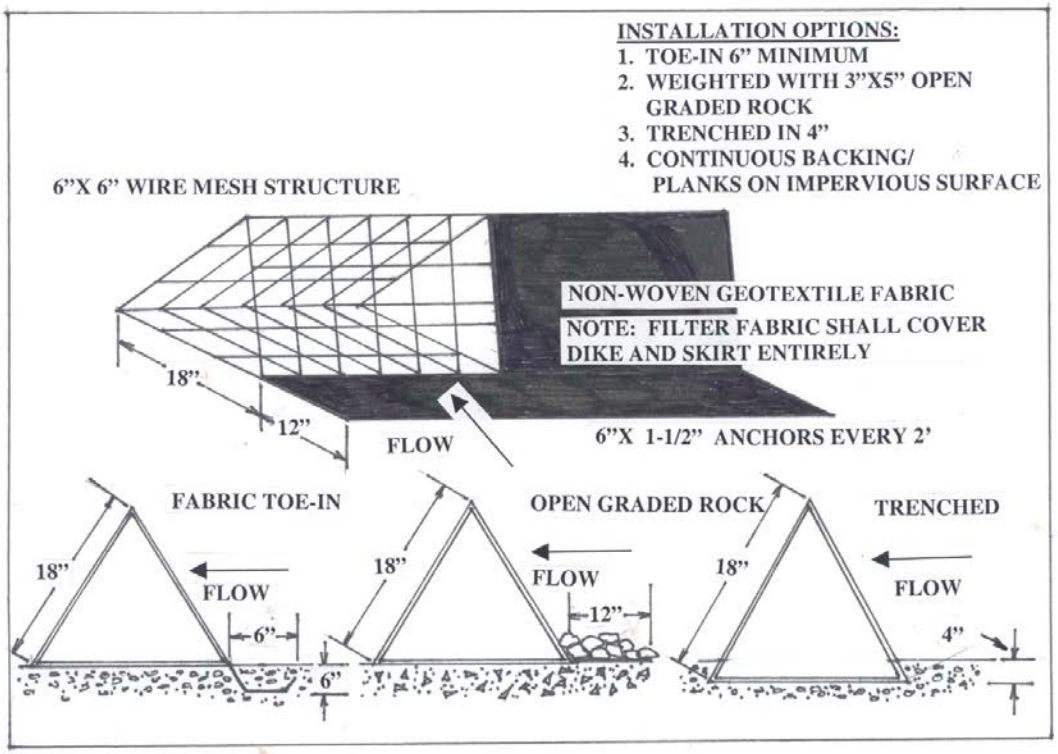

TRI DIKE FILTER DAM

1. DIKES SHALL BE PLACED IN A ROW WITH ENDS TIGHTLY ABUTTING THE ADJACENT DIKE.
2. THE FABRIC COVER AND SKIRT SHALL BE A CONTINUOUS WRAPPING OF NON-WOVEN GEOTEXTILE. THE SKIRT SHALL BE A CONTINUOUS EXTENSION OF THE FABRIC ON THE UPSTREAM FACE.
3. THE SKIRT SHALL BE WEIGHTED WITH A CONTINUOUS LAYER OF 3" X 5" OPEN GRADED ROCK, 1" X 4" LUMBER (SECURELY FASTENED), OR TOED IN 6" WITH MECHANICALLY COMPACTED MATERIAL. OTHERWISE, SHALL BE TRENCED IN 4" IN DEPTH.
4. DIKES AND SKIRT SHALL BE SECURELY ANCHORED IN PLACE USING 6" WIRE STAPLES ON 2' CENTERS ON BOTH EDGES OF SKIRT, OR STAKE USING 3/8" REBAR WITH TEE ENDS.
5. FILTER MATERIAL SHALL BE LAPPED OVER ENDS 6" TO COVER DIKE TO DIKE JOINTS. JOINTS SHALL BE FASTEN WITH GALVANIZED SHOAT RINGS.
6. THE DIKE STRUCTURE SHALL BE 6 GA. 6"X 6" WIRE MESH, 18" ON A SIDE.
7. ACCUMULATED SILT SHALL BE REMOVED WHEN IT REACHES A DEPTH OF 6" AND DISPOSED OF IN A MANNER WHICH WILL NOT CAUSE ADDITIONAL SILTRATION.
8. INSPECTION SHALL BE MADE WEEKLY AND REPAIR OR REPLACEMENT SHALL BE MADE PROMPTLY AS NEEDED.
9. AFTER THE SITE IS COMPLETELY STABILIZED, THE DIKES AND ANY REMAINING SILT SHALL BE REMOVED.

EXHIBIT "F"
Stabilized Construction Exit

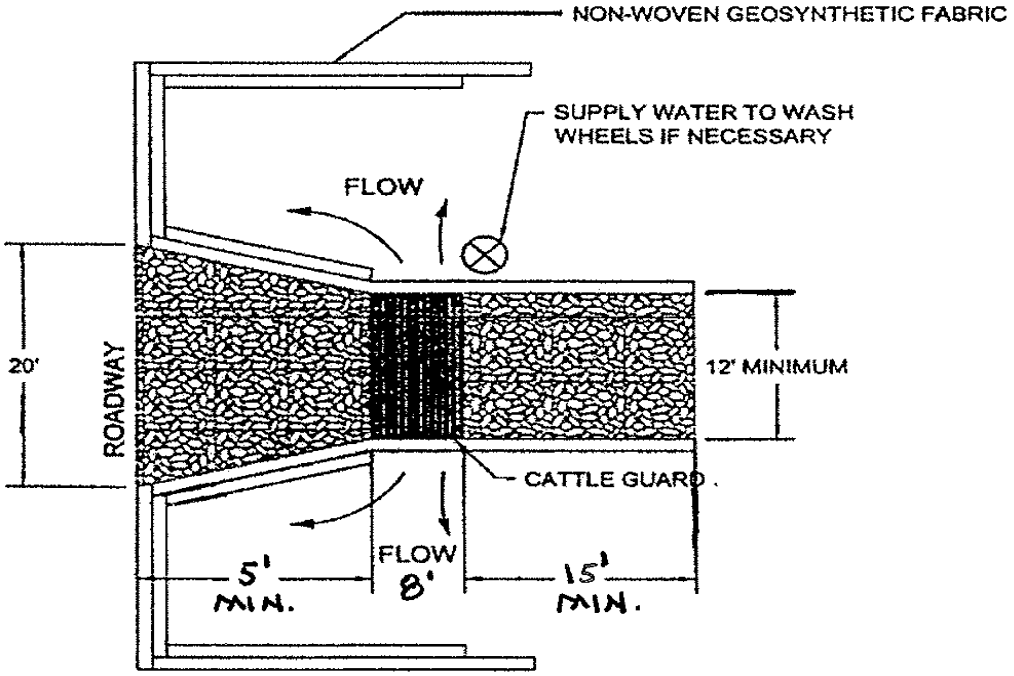

A steel grid that allows the safe passage of vehicles while agitating the tires to loosen and remove the soil build up. The grid or structures shall conform to the following:

1. IT SHALL CONSIST OF PIPES OR TUBES SPACED SUCH THAT THERE IS A MINIMUM CLEAR DISTANCE BETWEEN THE PIPES OR TUBES OF 4 ½". IT SHALL BE ELEVATED ABOVE THE GROUND SURFACE A MINIMUM OF 8" TO ALLOW WATER, DEBRIS AND SOIL TO DRAIN.
2. MINIMUM DIAMETER OF PIPE OR TUBE SHALL BE 3".
3. IT SHALL BE DESIGNED TO SUPPORT ANY AND ALL VEHICLES ENTERING AND LEAVING THE CONSTRUCTION SITE.
4. IT SHALL BE FIRMLY PLACED IN THE GROUND AT THE EXIT.
5. IT SHALL BE OF SUFFICIENT LENGTH SO THAT THE AGITATION WILL REMOVE THE SOIL FROM THE TIRES OR A MINIMUM OF 8'-0".
6. AT THE "STREET SIDE" APPROACH OF THE GRID THERE SHALL BE AN IMPERVIOUS SURFACE OR IT SHALL CONSIST OF 3" TO 5" DIAMETER ANGULAR CRUSHED STONE/ROCK APPROXIMATELY 5'-0" IN LENGTH, MINIMUM, AND 8" DEEP, MINIMUM. ON THE "JOB SITE" SIDE OF THE GRID, THERE SHALL BE 3" TO 5" DIAMETER ANGULAR CRUSHED STONE/ROCK 15"-0" IN LENGTH, MINIMUM, 8" DEEP, MINIMUM. THE STEEL GRID WILL BE BETWEEN THE "STREET SIDE" APPROACH AND THE JOB SITE CRUSHED STONE/ROCK. ALL CRUSHED STONE/ROCK SHALL HAVE FILTER FABRIC BENEATH THE STONE/ROCK.
7. STEEL GRID AREA SHALL BE USED AS THE TIRE WASH AREA. WHEN TIRE WASH IS IN USE (RAINY OR MUDDY DAYS) THE AREA SHALL BE MANNED AND THE TIRES SHALL BE WASHED USING A HIGH PRESSURE HOSE/NOZZLE.
8. THE AREA BENEATH THE GRID SHALL BE SLOPED SUCH THAT DEBRIS, SOIL AND WATER SHALL BE DIVERTED BACK ON TO THE CONSTRUCTION SITE OR TO A SEDIMENT BASIN. NO WATER, SOIL OR DEBRIS SHALL LEAVE THE CONSTRUCTION SITE. THE RESULTING DISCHARGE SHALL BE DISPOSED OF PROPERLY.

EXHIBIT "G"
Concrete truck washout

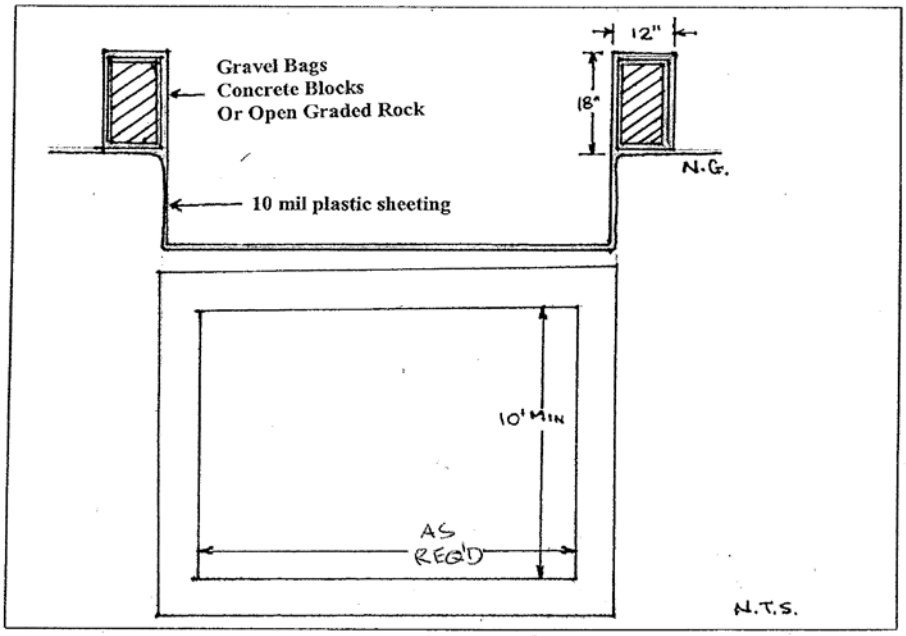

Alternative Self-installed Construction Site Concrete Truck Washout

1. **The excavation for the concrete truck washout shall be a minimum of 10' wide and of sufficient length and depth to accommodate 7 gallons of washout water and concrete per truck per day and/or 50 gallons of washout water and concrete per pump truck per day.**
2. **In the event that the self-installed concrete truck washout is constructed above ground, it shall be 10' wide and 10' long with the same requirements for containment as described in item 1.**
3. **The containment area shall be lined with 10 mil plastic sheeting, without holes or tears. Where there are seams, these shall be secured according to manufacturers directions.**
4. **The plastic sheeting shall be of sufficient size so that it will overlap the top of the containment area and be wrapped around the gravel bags, concrete blocks or open graded rock at least 2 times.**
5. **The gravel bags or concrete blocks shall be placed abutting each other to form a continuous berm around the outer perimeter of the containment area.**
6. **The berm consisting of gravel bags, concrete blocks or open graded rock shall be no less than 18" high and no less than 12" wide.**
7. **The containment area shall not exceed 50% of capacity at any one time.**
8. **Solids shall be removed from containment area and disposed of properly and any damage to the plastic sheeting shall be repaired or sheeting replaced before next use.**

SECTION 01 57 25 – DUST CONTROL PLAN

PART 1 - GENERAL

1.01 RELATED DOCUMENTS

A. Drawings and general provisions of the Contract, including General Conditions and Division 01 Specification Sections, apply to this Section.

B. Specifications throughout all Divisions of the Project Manual are directly applicable to this Section, and this Section is directly applicable to them.

1.02 SUMMARY

A. Perform all Work required to prevent and control dust in accordance with all applicable Federal, State, and local laws and regulations concerning the prevention and control of dust pollution.

B. Contractor furnish all the labor, equipment, materials, and means required, and carry out proper and efficient measures wherever and as often as necessary to reduce the dust nuisance to persons, and to prevent damage by dust originating from operations to vehicles, buildings, existing vegetation or any other properties. Contractor shall be liable for any damage resulting from dust originating from operations during this Project.

C. Contractor shall prepare a Dust Control Plan, as described within this Section, for Owner review and approval.

1.03 REFERENCE STANDARDS

A. The latest published edition of a reference shall be applicable to this Project unless identified by a specific edition date.

B. All reference amendments adopted prior to the effective date of this Contract shall be applicable to this Project.

C. The Contractor shall be responsible at all times for compliance with applicable laws and regulations pertaining to dust control and opacity monitoring at the Site, including but not limited to those contained in Title 30 of the Texas Administrative Code (TAC), Chapter 111 (30 TAC §111.111, 30 TAC §111.143, 30 TAC §111.145, 30 TAC §111.147, and 30 TAC §111.149), as hereafter amended.

1.04 QUALITY ASSURANCE

A. In addition to providing the Dust Control Plan, the Contractor shall provide for Owner review a copy of the daily check list on which Contractor Representatives will document the performance of the activities contained in the Dust Control Plan.

PART 2 - PRODUCTS

2.01 DUST CONTROL PLAN

A. Prior to beginning construction, the Contractor shall provide a written Dust Control Plan to the Owner for review.

B. Dust Control Plan shall include, but not be limited to, a description of the control processes that the Contractor will implement in order to address the following:

1. How grading operations will be handled/suspended when winds exceed 30 miles per hour.

2. How water will be applied to all surfaces prior to, and if necessary during, excavation.

3. How water or a covering will be applied to all particulate materials contained in open-bodied trucks, trailers or other vehicles transporting particulate matter prior to operation of the vehicle, in order to prevent dust from becoming airborne during transportation.

4. How water or a covering will be applied to all stockpiles of particulate material to prevent dust from becoming airborne during high windy conditions.

5. How transfer processes involving free fall of soil or other particulate matter will be performed in order to minimize free fall distance and thus reduce dust emissions.

6. How and when water will be applied to unpaved surfaces, including commercial roads, or any other surface that can create airborne dust in order adequately to control dust emissions.

7. How and when ground cover on the construction site will be reestablished prior to final occupancy.

8. The designated routes within the job site that will be used by vehicles transporting soil or other materials to and from the site.

9. How soil, sand, dirt and any other particulate matter will be removed from vehicle tires and undercarriages prior to leaving the site, in order to prevent trackout on the adjacent public roads.

10. The maximum speed limit on unpaved roads through the site, and how and where speed limit signs will be posted along the haul road routes so that they are visible to vehicles entering and leaving the site.

11. How and when soil, sand and other particulate material deposited or emitted onto any public thoroughfare near construction will be removed.

12. How dust control systems and/or devices, including; but not limited to water application systems, filter replacement, or daily removal of excess dust from containment areas, will be maintained.

PART 3 - EXECUTION

3.01 DOCUMENT AVAILABILITY

A. The Contractor shall make the Dust Control Plan and the Daily Dust Control Checklist available at the job site for periodic review, inspection and copying by Owner's representatives, regulatory agencies including but not limited to EPA and TCEQ, and other persons legally permitted to review them.

END OF SECTION 01 57 25

SECTION 01 77 00 - PROJECT CLOSE-OUT PROCEDURES

PART 1 - GENERAL

1.1. RELATED DOCUMENTS

1.1.1. The Contractor's attention is specifically directed, but not limited, to the Uniform General Conditions for University of Texas System Building Construction Contracts (UGC) for other requirements.

1.2. SUMMARY

1.2.1. The following Project Close-Out procedures are addressed in this Section:

1.2.1.1. Requirements for Substantial Completion

1.2.1.2. Provisions for Release of Retainage

1.2.1.3. Requirements for Final Acceptance

1.2.1.4. Requirements for Record Submittals and Samples

1.2.1.5. Requirements for Operating and Maintenance Manuals

1.2.1.6. Requirements for Commissioning and Close-out Manual

1.2.1.7. Requirements for Close-Out Document Submission

1.2.1.8. Project Cleaning

1.3. DEFINITIONS

1.3.1. The term “Project Close-Out” is hereby defined to include requirements near the end of the Contract Time, in preparation for Substantial Completion acceptance, occupancy by Owner, release of retainage, final acceptance, Final Payment, and similar actions evidencing completion of the Work. Specific additional requirements for individual units of work are specified in the Technical Specifications.

1.3.2. The term “Time” of Close-Out is directly related to completion and acceptance, and therefore may be either a single time period for the entire Project, or a series of time periods for individual portions or phases of the Project that have been certified as substantially complete at different dates.

1.3.3. Refer to the UGC for Definitions used throughout the Contract Documents.

1.4. REQUIREMENTS FOR SUBSTANTIAL COMPLETION

1.4.1. In addition to items identified in the UGC, prior to requesting a Substantial Completion inspection (for either the entire Work or portions thereof as agreed to by the Owner and Contractor), Contractor shall complete and/or submit the following to the Owner and list known exceptions in the request.

1.4.1.1. Contractor’s Application for Payment that is coincident with the period of time anticipated for Substantial Completion shall reflect a minimum of 95% completion for all applicable Work.

1.4.1.2. Owner's acceptance of all building system installations. If Owner's Construction Inspectors are assigned to the Project, acceptance may be in the form of building system final inspection reports.

1.4.1.3. Record Documents: Up-to-date, marked-up drawings and specifications that record all changes made during construction.

1.4.1.4. Record Submittals and Samples.

1.4.1.5. Operating and Maintenance Manual(s). Provide with warranty letters that coincident with the anticipated date for Substantial Completion.

1.4.1.6. Commissioning and Close-out Manual.

1.4.1.7. Completed Punchlists.

1.4.1.8. Certification statement that no asbestos containing materials have been used or incorporated into the Project perTexas Asbestos Health Protection Rules (TAHPR—Tex. Admin. Code Title 25, Part 1, Ch. 295C, Asbestos Health Protection.

1.4.1.9. Releases enabling Owner's full and unrestricted use of the Project and access to services and utilities, including (where applicable) operating certificates, and similar releases.

1.4.1.10. Deliver tools, spare parts, extra stock of materials, Samples, and similar physical items to Owner.

1.4.2. If Owner intends to occupy Project upon Substantial Completion acceptance, Contractor shall make provisions for final changeover of locks with the Owner's personnel. Upon written directive from Owner and for the convenience of the Contractor in completing Punchlist activity, Owner may waive the final changeover of locks until final acceptance.

1.4.3. Contractor shall complete instructing and training Owner's personnel for all systems and equipment serving the areas claimed as substantially complete, for which Owner training was not completed in association with system demonstrations and inspections. Refer also to Section 01 79 00 – Demonstration and Training.

1.4.4. Contractor shall complete the initial clean-up requirements as described in Part 3 of this Section for the entire portion of the Project claimed as substantially complete. Contractor shall touch-up and otherwise repair and restore marred exposed finishes.

1.4.5. SUBSTANTIAL COMPLETION INSPECTION PROCEDURE

1.4.5.1. Refer to the UGC and Section 01 45 00 – Project Quality Control.

1.4.5.2. The Contractor shall ensure the Work is ready for inspection and/or reinspection. If the Work is found not to be as stated in the Contractor's Punchlist or the items have not been substantially corrected and/or completed, the inspection will be terminated. All costs incurred by the Owner and Architect/Engineer for scheduling and attending the terminated inspection(s) shall be the responsibility of the Contractor and excluded from the Cost of Work.

1.5. PROVISIONS FOR RELEASE OF RETAINAGE

1.5.1. Refer to the UGC.

1.5.2. Release of any retainage, or reduction in amount of retainage withheld, is strictly at the discretion of the Owner, regardless of Contractor compliance with requirements. All of the requirements noted for Substantial Completion acceptance must be completed prior to application for final release of Contract retainage. In addition, Contractor shall meet the following requirements:

1.5.2.1. Submit affidavits of final release of claim and lien from each subcontractor and supplier who provided materials and/or labor to the Project.

1.5.2.2. Submit affidavit that all bills for the Project have been paid, or will be paid within thirty (30) days of Contractor's receipt of payment.

1.5.2.3. Submit Consent of Surety to Release of Retainage.

1.6. REQUIREMENTS FOR FINAL ACCEPTANCE

1.6.1. In addition to items identified in the UGC, prior to requesting a Final Completion inspection (for either the entire Work or portions thereof as agreed to by the Owner and Contractor), Contractor shall complete and/or submit the following to the Owner and list known exceptions in the request:

1.6.1.1. Draft Application for Final Payment showing 100% completion for each line item on the Schedule of Values. Contractor must submit with this draft, the final releases and supporting documentation not previously submitted and accepted. Contractor must include Certificates of Insurance when applicable. The Final Payment, including final release of retainage, will not be released until all Work (including Punchlist items) has been completed, all requirements met, a Project Close-Out audit performed (if deemed necessary) and a Final Change Order has been processed if required to resolve final cost or close-out audit issues, including deletion of any remaining Contract allowances.

1.6.1.2. Copy of Architect/Engineer's Substantial Completion Punchlist including evidence that each item has been completed or otherwise resolved.

1.6.1.3. Final meter readings for utilities, and similar data as of time of Substantial Completion or when Owner took possession of and responsibility for corresponding elements of the Work.

1.6.1.4. Final Record Documents see specification 01 78 39, Completed Commissioning and Close-Out Manual, acknowledging receipt of all attic stock, training/demonstration, test reports, and any other requirements of the Contract Documents.

1.6.1.5. Complete final cleaning requirements including touch-up of marred surfaces.

1.6.1.6. Evidence of final and continuing insurance coverage complying with applicable insurance requirements.

1.6.2. FINAL ACCEPTANCE INSPECTION PROCEDURE

1.6.2.1. When the Contractor has completed the Work required in the Final Completion inspection Punchlist and has complied with the Close-Out requirements in this Section and elsewhere in the Contract Documents, then the Contractor shall provide a minimum of ten (10) days written notice to the Architect/Engineer and Owner that the Project is ready for a final acceptance inspection for Final Completion. Refer to the UGC for additional requirements.

1.6.2.2. All Owner and Architect/Engineer costs for travel and time for additional inspections at either Substantial Completion or Final Acceptance which are required either by failure of the Contractor to complete the noted Punchlist items, or by erroneous notices that the Work is ready for such inspections, shall be the responsibility of the Contractor. Owner may issue a unilateral deductive Change Order for these costs.

1.6.3. FINAL PAYMENT REQUEST

1.6.3.1. Contractor shall submit the following documentation with the Application for Final Payment:

1.6.3.1.1. Final Release of Liens and Claims.

1.6.3.1.2. Affidavit of Payment of Debts and Claims.

1.6.3.1.3. Consent of Surety.

1.6.3.1.4. Completed SWPPP Documents and Notice of Termination.

1.6.3.1.5. Final Historically Underutilized Business Plan.

1.6.3.1.6. Completed and Signed Notice of Termination.

1.6.3.1.7. Signed Final Completion Certificate.

PART 2- PRODUCTS

2.1. REQUIREMENTS FOR RECORD SAMPLES

2.1.1. RECORD SAMPLES

2.1.1.1. Prior to date(s) of Substantial Completion, Contractor shall arrange for Architect/Engineer and Owner's representative to meet with Contractor at the Site to determine which (if any) of the submitted Samples or mock-ups maintained by Contractor during progress of the Work are to be transmitted to Owner for record purposes.

2.1.1.2. Contractor shall comply with Architect/Engineer's and/or Owner’s instructions for packaging, identification marking, and delivery to Owner's designated location at the Site or other location as directed by Owner.

2.1.1.2.1. Furnish two (2) binders of all record finishes Samples, bound in heavy-duty, 3-ring vinyl-covered binders including pocket folders for any folded sheet information. Binder content shall be divided with plastic-covered tabs for each section of each binder. Provide labels to identify binder content on both the front and spine of each binder.

2.1.1.2.2. Samples shall be mounted to paper or heavy stock depending on type of sample, organized by finish type, with the following information: Type, Manufacturer, Product Number, Finish/Color, Description, Installed Location.

2.1.1.2.3. Finishes Samples include, but are not limited to, the following as applicable to the Work: tile, VCT, terrazzo, stone, sheet vinyl, carpet, base, wall coverings, laminates, solid surface materials, decorative glass, paint, and wood.

2.1.1.3. Contractor shall dispose of other Samples in the manner specified for disposal of surplus and waste materials, unless otherwise indicated or directed by Architect/Engineer and/or Owner.

2.2. REQUIREMENTS FOR OPERATING AND MAINTENANCE MANUALS

2.2.1. Within thirty (30) days of the Notice to Proceed with Construction, Contractor shall submit to Owner the proposed format, content and organizational structure for Operating and Maintenance Manuals for Owner's review and approval. The organizational structure shall follow Owner's format for maintenance management; confirm structure with Owner.

2.2.2. Contractor shall make revisions and corrections to format and content as reasonably requested by Owner. After the Owner approves the proposed format, content, and organizational structure, Contractor shall create the file structure and update Operating and Maintenance Manual content as the Work progresses.

2.2.3. Product submittals, owner's manuals, manufacturer's printed instructions, parts lists, and other submittals required by other Sections of the Specifications shall be included in the Operating and Maintenance Manuals provided that they are approved and are formatted in a manner consistent with the requirements of this Section.

2.2.4. Test data and commissioning data included in the Operating and Maintenance Manuals need not be duplicated in the Commissioning and Close-Out Manual and vice versa. Test data not pertaining to a particular device or piece of equipment (such as domestic water pipe pressure test reports) must be inserted in the Commissioning and Close-Out Manual.

2.2.4.1. Equipment is defined as any mechanism, mechanical, electrical or electronic device, or any combination thereof, which is made up of two (2) or more working parts to perform a particular function.

2.2.4.2. When an item of equipment is a packaged unit furnished by one manufacturer and the package as furnished contains proprietary items of equipment obtained from other sources, Contractor shall include copies of equipment data for each item of such equipment as if each item of equipment had been separately furnished.

2.2.5. Manufacturers' standard printed data shall include only sheets pertinent to the product or component installed. Mark each sheet to identify each product or component incorporated into the Work. Prepare supplementary text if manufacturers' standard printed data are not available and where the information is necessary for proper operation and maintenance of equipment or systems.

2.2.6. Refer to individual Technical Specification Sections for additional operating and maintenance requirements.

2.2.7. Examples of equipment, material, and systems for which operating and maintenance data is required includes, but is not limited to, the following:

Architectural / Miscellaneous	**HVAC / Plumbing**	**Electrical / Life Safety**
Doors and Windows	Piping, Valves, and Fittings	Cable, Wire, and Connectors, 600 Volt
Overhead Coiling Doors and Grilles	Motors	Wiring Devices
Automatic Door Openers	Fire Protection Systems	Motor Control Centers
Door Hardware	Plumbing Equipment	Distribution Panelboards
Wall Coverings	Plumbing Specialties	Panelboards
Paint	Liquid Nitrogen System	Emergency Generator

Architectural / Miscellaneous	HVAC / Plumbing	Electrical / Life Safety
		Paralleling Switchgear
Floor Coverings and Base	Gas Systems	Packaged Engine Generator Systems
Stone and Terrazzo	Fuel Oil Systems	Automatic Transfer Switches
Tile	Reverse Osmosis System	Standby Power Generator Switchgear
Acoustical Ceiling Tile	Hydronic Specialties	Fuses
Decorative Glass	Steam and Steam Condensate Specialties	Switchgear
Access Flooring	HVAC Pumps	Power Factor Correction Equipment
Demountable Partitions	Chemical Treatment Systems	Transformers
Folding Operable Partitions	Chillers	Busway – 600 Volt and Below
Loading Dock Equipment	Boilers	Surge Protective Devices
Laboratory Casework	DX Air-Conditioning Systems	Motor Starters
Fume Hoods	Heat Exchangers	Power Status and Monitoring System
Biological Safety Cabinets	Humidifiers	Lighting Fixtures
Environmental Rooms	Terminal Heat Transfer Units	Lighting Control Systems
Sterilizers, Washers and Dryers	Modular Air Handling Units	UPS Equipment
Audio-Visual Equipment	Custom Air Handling Units	Fire Alarm System
Window Treatment	Fans	Communication Systems
Radiation Protection	Filters	Security System
Conveying Systems	Ductwork	
Irrigation Systems	Air Terminal Units	
Window Washing Systems	Air Outlets and Inlets	
Pneumatic Tube Systems	Variable Speed Drives	
	Building Automation System	

2.2.8. OPERATING AND MAINTENANCE DATA

2.2.8.1. Contractor shall furnish the following equipment data content to be Included in Operating and Maintenance Manuals:

2.2.8.1.1. Description of Equipment. Completed Equipment Matrix; refer to the Equipment Matrix requirements of Section 01 91 00 – General Commissioning Requirements.

2.2.8.1.2. Record Product Submittals. Clearly identify all options and accessories of actual installed product and variations in the actual Work in comparison with submitted information.

2.2.8.1.3. Parts List. Clearly identify every part in the item of equipment with the proper manufacturer's name, part nomenclature and number, local source, and list price.

2.2.8.1.4. Recommended Spare Parts List. For each equipment item that Owner will likely need within a 12-month period to support and operate that item of equipment. The quantities of spare parts recommended must be based upon the quantity of like equipment items installed under the Contract Documents.

2.2.8.1.5. Normal Operating Instructions. Detailed information to permit a journeyman mechanic to adjust, start-up, operate, and shut down the equipment. Special start-up precautions shall be noted as well as other action items required before the equipment is put into service.

2.2.8.1.6. Emergency Operating Procedures. Detailed description of the sequence of action to be taken in the event of a malfunction of the unit, either to permit a short period of continued operation or emergency shutdown to prevent further damage to the unit and to the system in which it is installed.

2.2.8.1.7. Preventive Maintenance. Detailed information to cover routine and special inspection requirements, including but not limited to, field adjustments, inspections for wear, adjustment changes, packing wear, lubrication points, frequency and specific lubrication type required, cleaning of the unit and type solvent to use, and such other measures as are applicable to preventive maintenance program.

2.2.8.1.8. Calibration. Detailed data on what to calibrate, how to calibrate, when to calibrate and procedures to enable checking the equipment for reliability or indications as well as data for test equipment, special tools and the location of test points.

2.2.8.1.9. Scale and Corrosion Control. Detailed information covering the prevention of and removal of scale and corrosion.

2.2.8.1.10. Trouble Shooting Procedures. Detailed information and procedures for detecting and isolating malfunctions and detailed information concerning probable causes and applicable remedies.

2.2.8.1.11. Removal and Installation Instructions. Detailed information concerning the logical sequence of steps required to remove and install the item including instructions for the use of special tools and equipment.

2.2.8.1.12. Disassembly and Assembly Instructions. Detailed illustrations and text to show the logical procedure and provide the instructions necessary to disassemble and assemble the unit properly. The text shall include all checks and special precautions as well as the use of special tools and equipment required to perform the assembly or disassembly.

2.2.8.1.13. Repair Instructions. Detailed repair procedures to bring the equipment up to the required operating standard including instruction for examining equipment and parts for needed repairs and adjustments, and tests or inspections required to determine whether old parts may be reused or must be replaced.

2.2.8.1.14. Special Tools and Test Equipment. Detailed list of the special tools and test equipment needed to perform repair and maintenance for each equipment item. The list shall contain the special tool and test equipment part number, size, quantity, price, manufacturer's name and address, and local supplier's name and address.

2.2.8.1.15. System Drawings. Contractor shall furnish detailed drawings, where applicable, that clearly show wiring diagrams, utility service diagrams, control diagrams, system schematics, pneumatic and fluid flow diagrams, etc., which pertain to the unit function. System drawings must show major pieces of equipment, such as chillers, boilers, heat exchangers, pumps, air handlers, tanks, switchgear, etc., as meaningful to the Project. Fluid flow and direction and valves with their valve tag identification numbers must be clearly noted on drawings. Drawings must show modifications to another manufacturer's standard unit when it is incorporated into the assembly or package unit.

2.2.9. WARRANTIES AND GUARANTEES

2.2.9.1. Contractor shall include, within the Operating and Maintenance Manual organizational structure for each system, equipment item, or material, an executed copy of the specified warranty/guarantee with warranty effective dates covering that particular system, equipment item, or material. Contractor shall include the manufacturer's warranty as specified and the installing subcontractor's and supplier's guarantee for workmanship and system operation.

2.3. REQUIREMENTS FOR COMMISSIONING AND CLOSE-OUT MANUAL

2.3.1. The Contractor shall incorporate all Commissioning and Close-Out documentation and/or verification documents not included in the Operating and Maintenance Manuals, into a separate Commissioning and Close-Out Manual for transmittal to the Owner at the conclusion of the Project. The Commissioning and Close-Out Manual is intended to be a consolidation of documentation/verification for the Project commissioning and close-out process. Update the Commissioning and Close-Out Manual throughout the Project, so that the documentation process can be expedited and monitored.

2.3.2. The Owner may provide a preliminary handbook with sample forms for use by the Contractor in development of the Commissioning and Close-Out Manual. Each Project may require the Contractor to revise and/or create forms for Project specific equipment. The Contractor shall review each form for approval with the Owner before using the Contractor's form.

2.3.3. The Commissioning and Close-Out Manual is not intended to impose duplication of Close-Out Documents. Those items and/or data that are incorporated into the Operating and Maintenance Manuals need not be included in the Commissioning and Close-Out Manual.

2.3.4. The Commissioning and Close-Out Manual shall include, but is not limited to, the following.

2.3.4.1. Commissioning documentation as described in Section 01 91 00 - General Commissioning Requirements.

2.3.4.2. Final air balance reports produced by the Test, Adjust, and Balance Firm.

2.3.4.3. Completed Valve Schedule and Fire, Fire/Smoke and Smoke Damper Schedule per Specification Section 20 05 53.

2.3.4.4. Owner Demonstration / Training Reports: Contractor shall furnish Training Plan and documentation of Owner's personnel training regarding operation of systems per Section 01 79 00 – Demonstration and Training and Technical Specification Sections. Contractor shall include identification of parties receiving training and date(s) of such training.

2.3.4.5. Paint/Finish Schedule: All paints, flooring, finishes, door hardware, used on the Project. Provide manufacturer, model number, color formula, location on Project,

purchase source, and any other information helpful to the Owner's maintenance personnel.

2.3.4.6. Extra Materials and Keys Checklists: Extra Materials shall be referenced to the Owner's Mainsaver Asset Number.

2.3.4.7. Elevator Checklist.

2.3.4.8. Electrical Test Reports (including factory tests and settings).

2.3.4.9. Miscellaneous Equipment Test Reports (including factory tests and settings).

2.3.4.10. HVAC Calibration Reports (including duct testing reports).

2.3.4.11. Fire Alarm Test Reports.

2.3.4.12. Piping Test Reports.

2.3.4.13. Sewer Video Log.

2.3.4.14. Code-required Certifications as described within Technical Specifications.

2.3.4.15. Material Safety Data Sheets (MSDS) for any and all products incorporated into the Project.

2.3.4.16. Miscellaneous Close-out Documents. Contractor shall provide categories of requirements resulting in miscellaneous work records including, but not be limited to, the following:

2.3.4.16.1. Required field records on excavations, foundations, underground construction, wells and similar work.

2.3.4.16.2. Accurate survey showing locations and elevations of underground lines, including invert elevations of drainage piping.

2.3.4.16.3. Surveys establishing lines and levels of building.

2.3.4.16.4. Planting material treatment records (wood, soil, etc).

2.3.4.16.5. Certifications received in lieu of labels on products and similar record documentation.

2.3.4.16.6. Concrete batch mixing and bulk delivery records.

2.3.4.16.7. Testing and qualification of tradesmen.

2.3.4.16.8. Documented qualification of installation firms.

2.3.4.16.9. Materials testing reports.

2.3.4.16.10. Final inspection Punchlist and deficiency corrections.

2.3.4.17. All original, signed Project warranties and guarantees.

PART 3- EXECUTION

3.1. REQUIREMENTS FOR CLOSE-OUT DOCUMENT SUBMISSION

3.1.1.1. Verify that all pages on every document have been scanned. All documents shall be scanned with optical character recognition (OCR) technology. Review each page to ensure that the scan captures original detail. If images appear too dark or too light, or smudged, rescan the page to ensure proper image quality and legibility. Color charts or other documents where color is required to convey full information shall be scanned in color.

3.2. PROJECT CLEANING AT SUBSTANTIAL COMPLETION

3.2.1. The Contractor shall maintain the Project and the Site in a clean and orderly condition throughout the course of construction. In addition to continuous Project cleaning, the following requirements are related to Project Close-Out. Special cleaning for specific units of Work may also be specified in other Sections of Project Specifications.

3.2.2. Contractor shall perform an initial cleaning of the Work consisting of cleaning each surface or unit of Work to normal "clean" condition expected for a first-class building cleaning and maintenance program.

3.2.3. Contractor shall comply with manufacturer's instructions for cleaning of all system components, equipment, and materials incorporated into the Project.

3.2.4. Contractor shall perform the following "initial" final cleaning immediately prior to the time the Contractor requests Substantial Completion inspection.

3.2.4.1. Remove labels that are not required as permanent labels.

3.2.4.2. Clean, according to manufacturer’s recommendations, exposed hard-surfaced finishes, including glass, metals, stone, concrete, painted surfaces, plastics, tile, wood, special coatings, and similar surfaces, to a dirt-free condition, free of dust, stains, films and similar noticeable distracting substances. Restore reflective surfaces to original condition.

3.2.4.3. Remove debris and surface dust from limited-access spaces including plenums, shafts, and similar spaces.

3.2.4.4. Clean concrete floors in non-occupied spaces, wet-mop and broom clean.

3.2.4.5. Clean fixtures of all dust and debris. Replace lamps in accordance with Technical Specifications after final Project cleaning.

3.2.4.6. Remove crates, cartons and other flammable waste materials or trash from the Site. Provide Owner with a finished Project that is free of concealed garbage, trash and rodent infestation. If concealed garbage, trash and rodent infestation are revealed, or odors from them occur, Contractor shall remove and correct at the Contractor’s expense. Restore property to its original condition where no improvements are shown.

3.2.4.7. Clean spaces such as elevator shafts, equipment rooms, pipe and duct chases, furred spaces, and other similar unfurnished space to leave free from rubbish, loose plaster, mortar drippings, extraneous construction materials, dirt, and dust.

3.2.4.8. Remove rubbish by way of chutes, taken down on hoists, or lowered in receptacles. Contractor shall not remove rubbish or waste by dropping or throwing from one level to another within or outside the building(s).

3.2.5. Contractor shall not mark, soil or otherwise deface finished surfaces. If Contractor marks, soils, or otherwise defaces finished surfaces, Contractor shall bear all costs for cleaning and restoring such surfaces to their originally intended condition.

3.3. PROJECT CLEANING AT FINAL ACCEPTANCE

3.3.1. Contractor shall complete the following "final" cleaning immediately prior requesting a Final Completion inspection:

3.3.1.1. Clean transparent materials, including mirrors and window/door glass, to a polished condition, removing substances that are noticeable as vision-obscuring materials.

3.3.1.2. Turn the work over in immaculate condition inside and outside the premises.

3.3.1.3. Clean all work on the premises including walks, drives, curbs, paving, fences, grounds and walls. Provide a clean shine on slick surfaces. Remove smudges, marks, stains, fingerprints, soil, dirt, paint, dust, lint, labels, discolorations and other foreign materials.

3.3.1.4. Clean all finished surfaces on interior and exterior of Project including floors, walls, ceilings, windows, glass, doors, fixtures, hardware and equipment. Final wax and polish all natural finish metal on interior or exterior surfaces. Clean and apply finish (including wax) to all floors as recommended by the manufacturer and accepted by Owner.

3.3.2. In addition to the cleaning specified above and more specific cleaning required in the various technical Specifications, Contractor shall prepare the building(s) for occupancy by a thorough cleaning throughout, including washing (or cleaning by approved methods) surfaces on which dirt or dust has collected, and by washing glass on both sides leaving a smear-free shine. Contractor shall wash exterior glass using a window-cleaning contractor specializing in such work.

3.3.3. Contractor shall remove temporary buildings and structures, fences, scaffolding, surplus materials and rubbish of every kind from the Site. Contractor shall repair these areas to be compatible with the surrounding construction finished condition.

END OF SECTION 01 77 00

SECTION 01 78 39 – PROJECT RECORD DOCUMENTS

PART 1 - GENERAL

1.01 RELATED DOCUMENTS

A. The Contractor's attention is specifically directed, but not limited, to the Uniform General Conditions for University of Texas System Building Construction Contracts (UTUGCs) for other requirements.

B. Drawings and general provisions of the Contract, including Division 00 and other Division 01 Specification Sections, apply to this Section.

C. Specifications throughout all Divisions of the Project Manual are directly applicable to this Section, and this Section is directly applicable to them.

D. General project closeout requirements are included in Section 01 77 00, Project Close-out Procedures.

E. General requirements for submittal of Shop Drawings and Product Data are included in the UTUGCs and Section 01 31 00, Project Administration.

1.02 SUMMARY

A. This Section specifies administrative and procedural requirements for Project Record Documents to be prepared and submitted by the Contractor and the Architect/Engineer, which include but are not limited to:

1. Record Documents

2. Record Drawings

3. Record Specifications

4. Final Drawings

5. Final Specifications

1.03 REFERENCE STANDARDS

A. The latest published edition of a reference shall be applicable to this Project unless identified by a specific edition date.

B. All reference amendments adopted prior to the Effective Date of this Agreement shall be applicable to this Project.

1.04 DEFINITIONS

A. The following terms used within the Section are defined in the UTUGCs, unless otherwise defined herein:

1. Contract Documents

2. Construction Documents

3. Drawings

4. Final Drawings: The Drawings from the Contract Documents that have been professionally electronically drafted reflecting the as-constructed conditions of the Work based upon the information provided by the Contractor as reflected in the Record Documents.

5. Final Specifications: Specification section of the Project Manual compiled, and incorporating all additions and edits to the Specification issued to Contractor for construction.

6. Project Workspace: Is the Owners Internet-based Project Management System

7. Record Documents

8. Records Document Edit Log: A log documenting all markings or information added to the Record Documents.

9. Record Submittal: Approved product submittal and Shop Drawing, including documentation of all Architect/Engineer and Owner comments.

10. Shop Drawings

11. Specifications

12. Submittals: Shop drawings, material data, samples, and product data to verify that the correct products and quantities will be installed on the project.

13. Supplemental Documents: Examples of Supplemental Documents include, but are not limited to: HVAC ductwork, hydronic and plumbing piping, sprinkler piping, switchgear, and custom air handling units.

B. Redline Documents: See Record Documents.

C. As-Built Drawings: See Record Documents.

D. Final Specifications – Specification section of the Project Manual compiled, incorporating all additions or edits to the specification issued to contractor for construction.

E. Final Drawings: The Drawings from the Contract Documents that have been professionally electronically drafted reflecting the as-constructed conditions of the Work from the Record Documents.

PART 2 - PRODUCTS

2.01 REQUIREMENTS FOR RECORD DOCUMENTS

A. During progress of the Work, Contractor shall maintain a set of Record Documents and Shop Drawings at the Site. Contractor must update these documents weekly, at a minimum, with mark-ups of actual installations that vary from the Work as originally shown. Contractor shall include all Drawings issued as addenda, clarifications, or Change Orders.

B. Contractor shall maintain and have available for review in conjunction with project progress meetings, a current set of the marked-up Record Documents and Shop Drawings. Availability for review and acceptability of both the format and content are prerequisites for certification and acceptance of the Application for Payment by the Owner and Architect/Engineer.

C. Contractor shall not use Record Documents for construction purposes. Contractor must protect Record Documents from deterioration and loss in a secure location.

2.02 RECORD DOCUMENTS EDIT LOG

A. During progress of the Work, Contractor shall update the Record Documents Edit Log each time updates or edits are made, or information is added, to the Record Documents and shall review the log with the Owner prior to submitting each monthly Application for Payment.

B. The Record Documents Edit Log shall include the following information as a minimum;

1. Date Edited.

2. Name and Company of Person Making Edit.

3. Edit Type: RFI, Change Order/Request for Proposal, Field Change, Red Line, Supplemental Document, and Revision/ASI.

4. Reference: name and number of the source document if applicable, such as Change Order or RFI number.

5. Sheet(s) Edited.

6. Description of Edit, unless documented by an RFI, Change Order, or Field Change.

C. Refer to Attachment “A” for Owner’s template for the Record Documents Edit Log

2.03 RECORD DRAWINGS

A. Contractor must mark-up Drawings that are most compatible for showing actual physical condition, fully and accurately and must reference all other appearances of this Work to the updated sheet. Contractor must include cross-references to the Change Order number on the updated Drawing sheet and all additional sheets where the Work is shown.

1. Contractor must mark-up with erasable colored pencil, in a legible and professional manner using separate colors where feasible, to distinguish between changes for different categories of Work at the same general location.

2. Contractor must mark-up important additional information, which was either shown schematically only or omitted from the Construction Documents. Contractor must give particular attention to information on concealed work that would be difficult to identify or measure and record at a later date.

3. Contractor must require each person preparing mark-ups to initial and date the mark-ups and indicate the name of their company

4. If Supplemental Drawings are used, Contractor must follow the requirements below for Supplemental Drawings.

5. In association with Contractor’s request for Substantial Completion inspection, Contractor must submit one (1) copy of the marked-up record drawings to Project Workspace for Owner review. Drawings shall be scanned and indexed in Adobe PDF format.

2.04 SUPPLEMENTAL DOCUMENTS

A. The use of Shop Drawings and/or fabrication drawings as supplements to the final record drawings is required for all items in which the larger scale employed on the Shop Drawings is needed to show the work in sufficient detail for Owner’s future use. When marked-up Shop Drawings are included in the Record Documents, Contractor must mark-up and cross-reference on the Contract Drawings at the corresponding location.

B. During maintenance and updating of the Record Drawings, the applicable Supplemental Documents must be placed in the set directly behind the Drawing that it supplements, with appropriate reference notes on both the applicable Record Drawing and all other affected drawings.

C. The Supplemental Document must be identified as a Record Document and must be numbered with an extension to the Drawing it supplements in a manner acceptable to the Owner.

2.05 RECORD SPECIFICATIONS

A. It is mandatory that all changes to specified materials, installation, warranty, etc. be clearly and fully marked within the applicable Specification section in a manner acceptable to the Architect/Engineer and the Owner. Contractor shall review with the Owner and document an acceptable procedure early in the construction phase.

B. Contractor must give particular attention to substitutions, selection of options, and similar information on work where the exact products used are not clearly identified or readily discernible in the original Specifications. When applicable, Contractor must cross-reference related Record Drawing information and product data.

C. Contractor must neatly transcribe and post all marked-up information to a "clean" copy of the Specifications, ensuring that similar types of information are annotated in like fashion throughout the Specifications.

D. In association with Contractor's request for Substantial Completion inspection, Contractor must submit the marked-up Site copy of the Record Specifications to the Owner for review. Upon the Owner's acceptance that the Record Specifications are accurate and complete, the Architect/Engineer will proceed with preparation of Final Specifications.

2.06 RECORD SUBMITTALS

A. During progress of the Work, Contractor shall maintain copies of each approved product submittal and Shop Drawing, including documentation of all Architect/Engineer and Owner comments. Contractor shall include variations in product as delivered to the Site and variations from manufacturer's instructions and recommendations for installation.

B. Contractor shall give particular attention to concealed products and portions of the Work that are not clearly identified in the original Submittal or cannot otherwise be readily discerned at a later date by direct observation. Contractor shall cross reference to change orders and record drawings and specifications.

C. These Record Submittal requirements are in addition to inclusion of similar material as Supplemental Drawings or data for Operating and Maintenance Manuals.

PART 3 - EXECUTION

3.01 SUBMISSION

A. Prior to requesting Substantial Completion, Contractor shall submit all Record Documents via Project Workspace.

1. Contractor is responsible for each Subcontractor submission and coordination of Record Documents.

2. Contractor shall submit to the Owner and Architect/Engineer, a PDF indexed with scanned color copies of each Record Drawing.

3. Submit all Record Documents related to each Subcontractor's particular Work, whether or not changes and additional information were recorded.

END OF SECTION 01 78 39

Download an Electronic Version of the Record Documents Edit Log template at the following Internet Address
http://www2.mdanderson.org/depts/cpm/standards/supp.html#templates

RECORD DOCUMENTS EDIT LOG

This log is used to capture all edits and changes made to the record documents (drawings, specifications, approved submittals). When making ANY edit/change to the record documents, the person making the edit/change shall document it by making an entry in this log. By keeping this log, all project stakeholders can easily see what has been done to the record documents. This will help ensure a complete set of record documents, make it easier to coordinate record document maintenance between all parties, and improve the quality of the final product.

Edit Types		
Abbreviation	**Edit Type**	**Example/Notes**
RFI	Request for Information	Changes/clarifications made to the contract documents by RFI's.
CO/RFP	Change Order or Request for Proposal	The Change Order is the official change document, but reference to the RFP may be necessary if the CO is in process.
Field Change	Field Change	A change that was made without an initiating document that is within the allowable tolerances. If the change is followed up on with an RFI, RFP/CO then it is no longer a field change.
Red Line	Red Line, As-Constructed, Omitted or Not Shown in drawings	This is for work that is not specifically shown in the drawings. For example, the electrical circuit locations may not be shown in the design, but the electrical sub-contractor has drawn them on the contract drawing sheet.
Sup. Doc.	Supplemental Document	Shop Drawings, sketches, schematics that show the work in greater detail and are intended to be included with the final as-built documents. Could be issued by any party. MEP shop drawings are required to be included with the record documents.
Revision/ASI	Revisions or Architect's Supplemental Instructions	Changes/clarifications made to the contract documents by ASI's or revisions issued by A/E
Addendum	Addendum	Changes/clarifications made to the contract documents by Addenda.

Date Edited *MM / DD / YYYY*	**Name and Company of Person Making Edit**	**Edit Type(s)** *Select all that apply*	**Reference** *Ex. RFI-123*	**Sheet(s) Edited**	**Description of Edits**
/ /201		☐ RFI ☐ CO/RFP ☐ Field Change ☐ Red Line ☐ Sup. Doc. ☐ Revision/ASI ☐ Addendum ☐ Other:	☐ N/A		
/ /201		☐ RFI ☐ CO/RFP ☐ Field Change ☐ Red Line ☐ Sup. Doc. ☐ Revision/ASI ☐ Addendum ☐ Other:	☐ N/A		

Project # and Name: GC: Primary Contact for Record Documents:

Example

ATTACHMENT “B” – DRAWING SUBMITTAL TO FM LIBRARY PROCESS

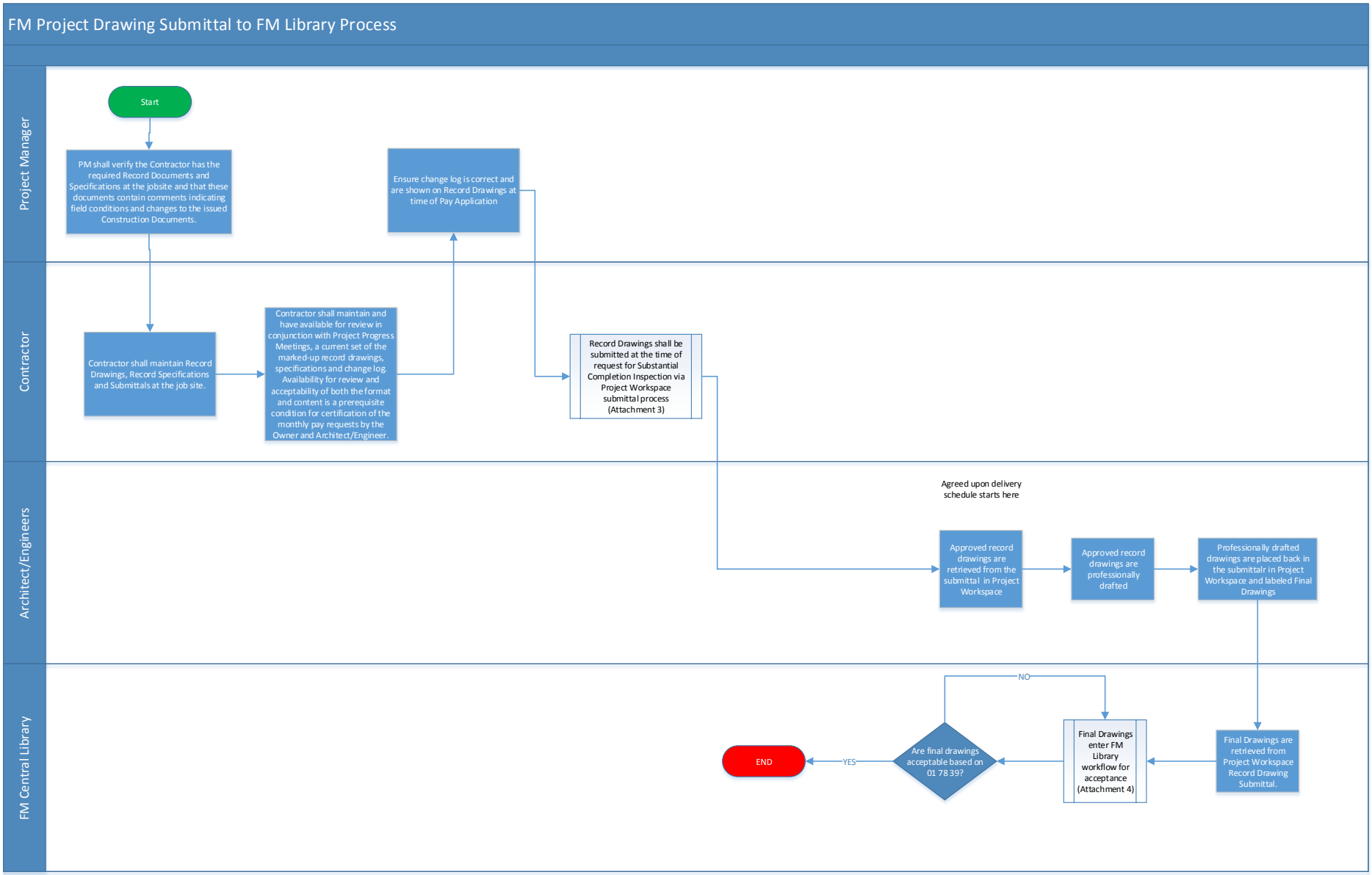

PROJECT WORKSPACE SUBMITTAL WORKFLOW

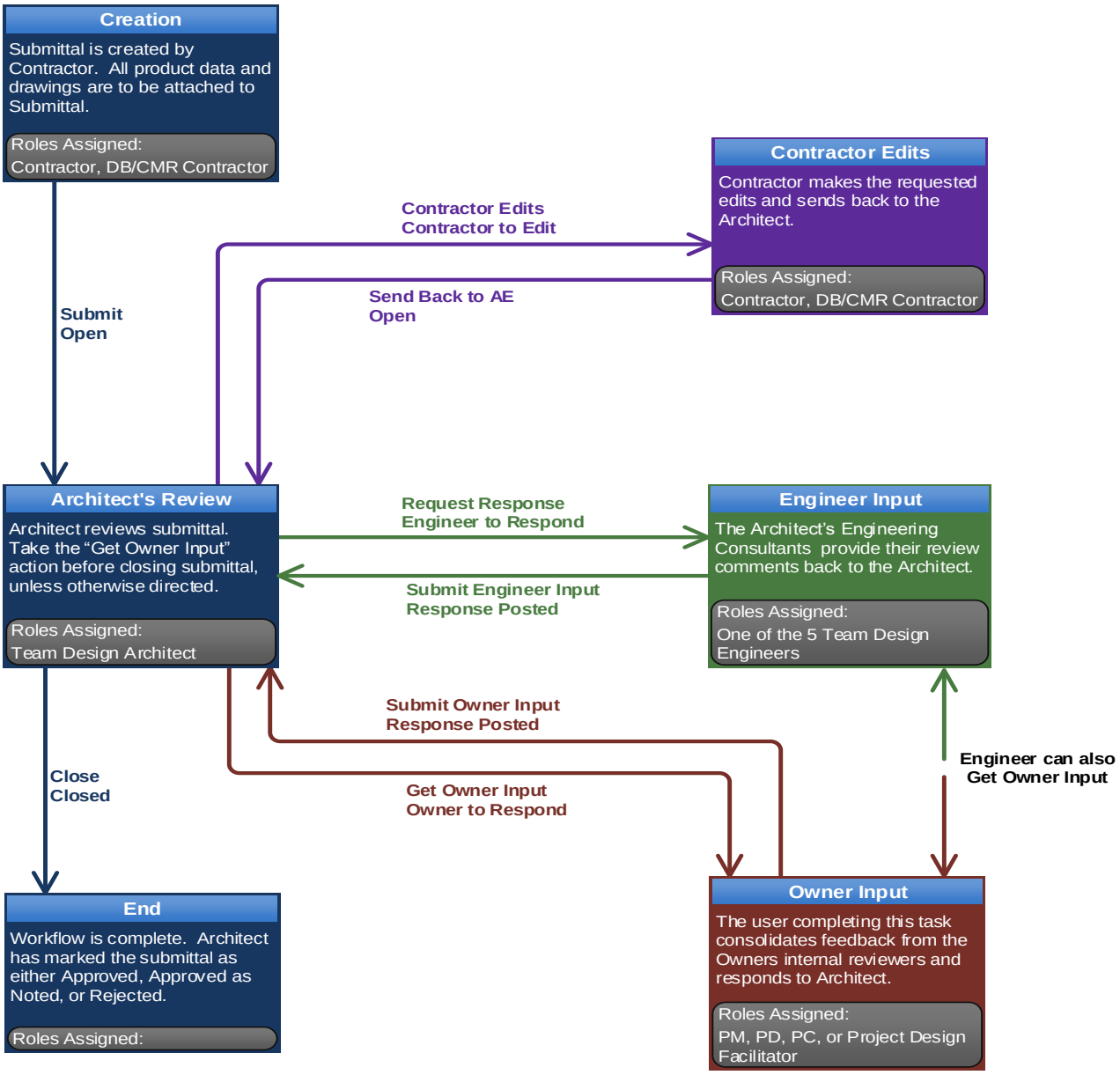

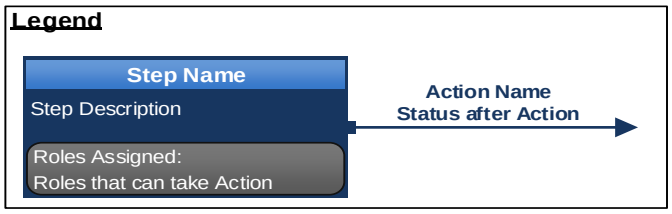

ATTACHMENT “D” – FACILITIES CENTRAL LIBRARY WORKFLOW

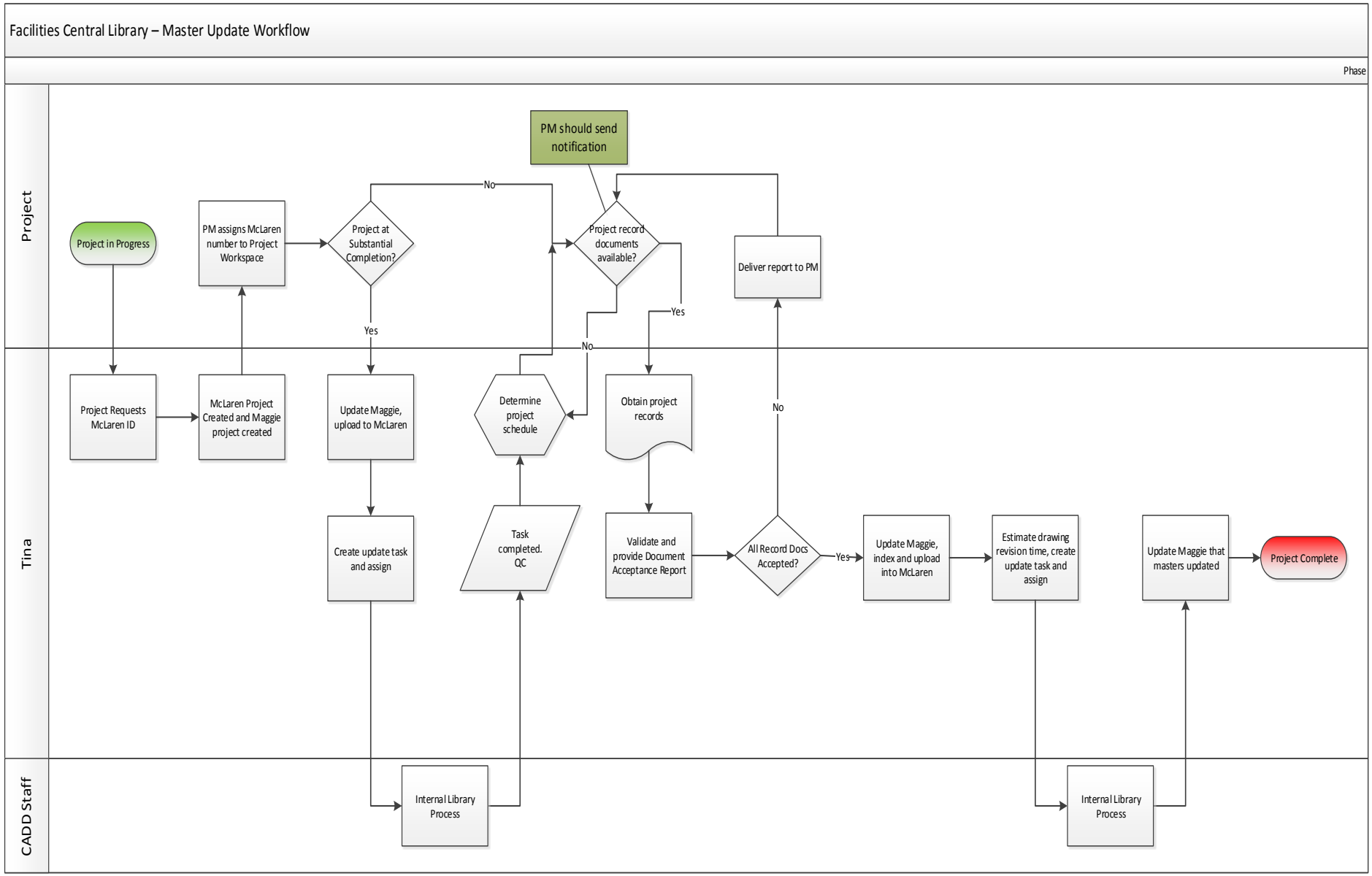

SECTION 01 78 46 – MAINTENANCE MATERIALS

PART 1 - GENERAL

1.01 RELATED DOCUMENTS

A. Drawings and general provisions of the Contract, including General and Supplementary Conditions and Division 01 Specification Sections, apply to this Section.

B. Specifications throughout all Divisions of the Project Manual are directly applicable to this Section, and this Section is directly applicable to them.

1.02 SUMMARY

A. Section includes minimum requirements for surplus maintenance materials of the same production run of installed products (attic stock) to be furnished as part of the Project and that Contractor shall deliver to Owner's designated storage facility.

B. Furnish maintenance materials as described within Part 2 – Schedule of Maintenance Material Items.

1.03 DEFINITIONS

A. Maintenance Materials: Additional material designated within this Section intended to match and replace non-standard products installed in this Project. Non-standard products may include materials that require a specific color or pattern.

B. Spare Parts: Parts, tools, service kits, or equipment components that are included in the purchase of the original equipment and are provided by the original equipment manufacturer for use by the Owner.

C. Perishable Items: Items such as paint, coatings, adhesives, batteries, and other items with a finite shelf life.

1.04 DELIVERY, STORAGE AND HANDLING

A. Prepare items for storage as follows:

1. Items shall be delivered in undamaged, original packing, or packaged in a protective covering for storage.

2. Item description, manufacturer's name and model number where applicable, quantity, MD Anderson project name, and MD Anderson building name shall be clearly marked on a visible surface of the packaging.

3. Mechanical rooms, electrical rooms, telecommunications, and other service areas shall not be used as storage or staging areas unless Contractor obtains prior written approval from the Owner's property manager and Environmental Health and Safety representative.

B. Contingent Storage Locations:

1. 100O; Contractor Work Building (CWB)

2. 118;Warehouse Complex-Corder (WCS)

3. 122B; Landscape Warehouse Building (LWB)

4. 143; Warehouse Complex - Pawnee Street (WPS)

5. 156; Central Plant Building (1CP)

6. 157; Operations and Maintenance Building (OAM)

7. 257; Warehouse And Physical Plant (SAT) – Smithville Campus

C. Delivery:

1. Deliver materials directly to an Owner-approved, designated storage or warehouse facility, confirmed prior to delivery.

PART 2 - PRODUCTS

2.01 GENERAL

A. All materials shall meet or exceed all applicable referenced standards, federal, state and local requirements, and conform to codes and ordinances of authorities having jurisdiction.

B. All maintenance materials required are referenced in this specification section.

2.02 TENATIVE SCHEDULE OF MAINTENANCE MATERIAL ITEMS

A. Contractor shall coordinate the final material selection as well as respective quantities with Project A/E and Owner prior to issuance of contract documents for subcontractor proposals.

Specification	Material Item Description	Furnished Quantity
08 71 11	Door Hardware - Keying	Furnish a complete set of specialized tools for removal and replacement of door hardware. Furnish six (6) master keys and three (3) change keys per key set. All keys and final cores are to be provided direct to Owner by this supplier.
09 30 00	Tile and Trim Units	Full size units equal to 3 percent of amount installed, for each type, composition, color, pattern, and size
09 51 00	Acoustical Ceiling Units,	Acoustical Ceiling Units: Full size units equal to 2.0 percent of amount installed.
09 51 00	Suspension System Components	Suspension System Components: Furnish quantity of each component equal to 2.0 percent of amount installed.
09 65 13	Resilient wall base	Furnish not less than 10 linear feet for each 500 linear feet or fraction thereof of each different type and color of resilient wall base installed.
09 65 16	Resilient sheet floor covering	Furnish not less than 10 linear feet for each 500 linear feet or fraction thereof, in roll form of each different composition, wearing surface, color, and pattern of resilient sheet

		floor covering installed.
09 68 00	Broadloom Carpet	Full width for each type of material equal to 5 percent of amount installed.
09 68 00	Carpet Tile	Full size tiles for each type of material equal to 10 percent of amount installed
09 69 00	Standard Field Panels and Understructure	Standard Field Panels and Understructure: Furnish quantity of standard field panels and understructure components to support them equal to 2 percent of the amount installed.
09 72 00	Wall covering	Furnish quantity of full size rolls equal to 5 percent of amount of each wallcovering material installed.
09 84 33	Acoustical Wall Treatment Panels	Furnish quantity of full size rolls equal to 10 percent of amount of each wallcovering material installed.
09 97 00	Multi-Color Interior Coating	Multi-Color Interior Coating: Furnish quantity equal to 2 percent of amount applied, but not less than one gallon, for each color and pattern installed.
10 22 19	Demountable partition system	Deliver to the Owner, not less than three percent of the Project total for each component, panel and accessory of each type, color, and finish of demountable partition system exclusive of material required to properly complete installation. Furnish accessory components and installation tools as indicated on schedule.
10 26 00	Wall and corner guard, and wall protection material	deliver to Owner not less than 2 percent of each type, color, and pattern of wall and corner guard, and wall protection material
10 56 26	Mobile high density shelving systems	Replacement Materials: After completion of Work, deliver accessory components as required. Furnish replacement materials from same production run as materials installed.
14 21 00	Electric Traction Elevators	Provide to Owner any proprietary tools, manuals, adjuster manuals, parts lists, software / hardware updates including programming software for all microprocessor based equipment, etc. Provide two complete sets of full-height blankets for each car size.
20 05 16	Piping Expansion Compensation - Extra Materials	Provide two (2) 12-ounce containers of packing coverage for leak-free performance of expansion joints.
21 10 13	Wet Standpipe & Sprinkler System - Extra Materials	Provide supply of spare heads of each type installed under the Contract in quantities as required by National Fire Protection Association Standard No. 13. The heads shall be packed in a suitable wall mounted sprinkler cabinet and shall be representative of and in proportion to, the number of each type and temperature rating installed. In

		addition to the spare heads, the Contractor shall provide not less than three special sprinkler head wrenches for each type of head.
21 13 16	Preaction Sprinkler Systems - Extra Materials	Provide supply of spare heads of each type installed under the Contract in quantities as required by National Fire Protection Association Standard No. 13. The heads shall be packed in a suitable wall mounted sprinkler cabinet and shall be representative of and in proportion to, the number of each type and temperature rating installed. In addition to the spare heads, the Contractor shall provide not less than three special sprinkler head wrenches for each type of head.
21 31 13	Fire Pumps - Maintenance Service / Parts	Furnish service and maintenance of fire pump, driver, and controller for one year from date of Substantial Completion. Provide one complete set of gaskets, screens and seals for each pump type and model supplied.
22 10 00	Plumbing Piping - Extra Materials	Provide one differential pressure meter kit for use with domestic hot water return circuit balancing valves installed within this project. Kit shall include differential pressure gauge, hoses with 90 micron inline filters, readout probes, circuit setter calculator and carrying case.
22 10 30	Plumbing Specialties - Extra Materials	Provide two loose keys for each type of wall hydrant box. Provide manufacturer's standard test kit for each type of backflow preventer installed.
22 11 23	Domestic Water Pressure Boosting Systems (VFD) - Extra Materials	Provide one (1) spare variable frequency drive for each equivalent horsepower motor included within the system.
22 20 23	Natural Gas Piping - Extra Materials	Provide one (1) plug valve wrench for every ten (10) plug valves sized 2 inches and smaller, minimum of one. Provide each plug valve sized 2-1/2 inches and larger with a wrench incorporating a setscrew.
22 31 16	Domestic Water Softeners - Extra Materials	Salt for Brine Tanks: Furnish same form as and at least four times original load, but not less than 200 pounds. Provide Water testing kit.
22 33 13	Electric Instantaneous Domestic Water Heaters - Extra Materials	Provide one heating element for each size and type of heater element provided within this project.
22 40 00	Plumbing Fixtures - Extra Materials	Provide two service kits for each type of faucet, flush valve, shower/tub valve & all other trim/accessories having serviceable parts

22 45 00	Emergency Shower & Eye Wash Equipment - Extra Materials	Provide manufacturer's drench shower tester for each emergency shower installed.
22 66 53	Laboratory Waste and Vent Piping (PP/Duriron)	Provide pipe grooving tools after completion of the job. Tools shall be of same manufacturer as pipe and capable of grooving all sizes of thermoplastic piping installed.
22 66 54	Laboratory Waste and Vent Piping (Glass/Duriron	Provide glass cutting tools after completion of the job. Cutting tools shall be of same manufacturer as pipe and capable of cutting all sizes of piping installed.
23 05 13	Variable Frequency Drives - Extra Materials	(2) insulated-handle tools designed for pulling fuses (ANSI/ IEEE C37.46) Refer to Section 26 28 13 for fuse requirements.
23 21 23	HVAC Pumps - Extra Materials	Provide (1) set of replacement seals for each size pump
23 21 30	Hydronic Specialties - Extra Materials	Provide one differential pressure meter kit from the installed balancing valve manufacturer for use with circuit balancing valves installed within this project. Kit shall include meter, hoses, connection accessories, circular slide rule, carrying case and valve manufacturer's curve charts. If the contractors scope of the project is a renovation in an existing building and the balance valves match existing manufacturer and models the contractor shall inquire with Owners maintenance staff if a meter kit is required.
23 40 00	Filters - Extra Materials	Furnish (1) extra set of new filters for each filter bank after substantial completion including but not limited to: replaceable throwaway, replaceable dry type medium and high efficiency, high efficiency caissons
23 40 13	Filters - Extra Materials	Furnish one (1) extra set of new filters for each filter bank after Substantial Completion, including but not limited to the following: 1. Replaceable throwaway. 2. Replaceable dry type medium and high efficiency. 3. High efficiency caissons carbon absorber media. Furnish two (2) extra sets of new disposable filter media for each filter bank after Substantial Completion, for the following: Charged media ionizing air filtration systems
23 72 23	Energy Recovery Units - Extra Materials	Furnish (2) sets of each filter type specified. Furnish two (2) sets of all types and size of belts for each driven component.

23 73 22	Site Built Custom Air Handling Units	Furnish and install one complete set of new filters for each unit after it has been tested and operated and receives final acceptance by the Owner.
23 73 24	Custom Air Handling Units w/ Fan Array Systems - Extra Materials	(1) additional set of specified filters for each unit, packaged for storage after each unit has been tested and operated, tag products to identify associated unit
23 81 23	Computer Room Air Conditioning Units - Extra Materials	Provide an additional set of filters for each CRACU
23 84 14	Electric Steam Grid Humidifiers	Provide six extra disposable humidifier cylinders for each unit.
26 23 13	600 Volt Emergency Generator Paralleling Switchgear	Provide: Keys. Six spares for each type of switchgear cabinet lock. Touchup Paint. Three 0.5 pint (250 mL) containers of paint matching enclosure finish. Indicating lights. One for every ten of each type and rating installed. Furnish at least one of each type. Spare fuses: Potential transformer uses. One for every ten of each type and rating installed. Furnish at least one of each type. Control power fuses. One for every ten of each type and rating installed. Furnish at least one of each type.
26 28 13	Fuses, 600 Volt	Provide (1) set of spare fuses (3 fuses) of each size and type used on the project in a keyed lockable fuse cabinet (keyed to Owner's master electrical key) Fuse cabinet to be mounted in main switchgear room of the building as designated by Owner.
26 36 24	5KV Automatic Transfer Switches	Spare 5kV fuses: Furnish one set of spare fuses (3 fuses) of each size and type used on the Project in a keyed lockable fuse cabinet (keyed to Owner’s master electrical key). Fuse cabinet to be mounted in the room, building space where the 5kV automatic transfer switches are installed or as designated by the Owner.
26 51 00	Lighting Fixtures	Provide a stock of replacement lamps in original cartons or packing sleeves, amounting to (10%) not less than (2) lamps in each case, of each type and size
28 30 00	Fire Alarm & Smoke Detector Systems - Extra	The installing fire alarm Subcontractor shall furnish a total of 1 percent of the total

	Materials	devices installed, or a minimum amount of one device per quantities shown, including: 1. Smoke detector bases and heads. (Minimum one device per first 25 installed) 2. Heat detector bases and heads. (Minimum one device per first 25 installed) 3. Manual pull stations. (Minimum one device per first 25 installed) 4. Audio/visual devices. (Minimum one device per first 15 installed) 5. Magnetic holdbacks. (Minimum one device per 15 first installed) 6. Duct detector bases, heads (Minimum one device per first 15 installed) 7. Addressable monitor modules. (Minimum one device per first 15 installed) 8. Addressable control modules. (Minimum one device per first 5 installed) 9. Remote indicators. (Minimum one device per first 5 installed) 10. For any project requiring more than 20 pull stations, two (2) stopper II type pull station covers shall be provided to the Owner as spare parts.
32 80 00	Irrigation Systems - Spares & Special Tools	Provide (2) spare sprinkler heads of each size & type, Provide four valve keys with 3/4 inch swivel hose ells.

2.03 SPARE PARTS

A. The Owner's property manager or maintenance supervisor for the Project building is responsible for the acceptance and storage of spare parts.

B. Items included with the purchase of materials or equipment that are considered spare or replacement parts are the property of MD Anderson and shall be submitted to the area for acceptance and storage.

C. Installation aids, transportation tools and all items that are not deemed as spare parts shall be disposed of per Owner's waste disposal policies, or may be retained by the Contractor.

PART 3 - NOT USED

END OF SECTION 01 78 46

SECTION 01 79 00 - DEMONSTRATION AND TRAINING

PART 1 - GENERAL

1.01 RELATED DOCUMENTS

A. Drawings and general provisions of the Contract, including General Conditions and Division 01 Specification Sections, apply to this Section.

B. Specifications throughout all Divisions of the Project Manual are directly applicable to this Section, and this Section is directly applicable to them.

1.02 SUMMARY

A. This Section includes administrative and procedural requirements for instructing Owner's personnel, including the following:

1. Demonstration of systems, subsystems, and equipment operation.

2. Training in operation and maintenance of systems, subsystems, and equipment.

3. Demonstration and training video recordings.

B. Refer to individual Technical Specification Sections for additional demonstration and training requirements related to systems and components.

C. Demonstration and training shall follow successful system and equipment start-up and Owner acceptance of commissioning tests as described in Section 01 91 00 – General Commissioning Requirements.

1.03 QUALITY ASSURANCE

A. Facilitator Qualifications: A firm or individual experienced in training or educating maintenance personnel in a training program similar in content and extent to that indicated for this Project, and whose work has resulted in training or education with a record of successful learning performance.

B. Instructor Qualifications: A factory-authorized service representative, experienced in operation and maintenance procedures and training.

1.04 SUBMITTALS

A. Training Plan: Submit outline of instructional program for demonstration and training, including a list of training modules and a schedule of proposed dates, times, length of instruction time, and instructors' names for each training module. Include learning objective and outline for each training module. Refer to Owner’s Commissioning Process Templates for example forms of the Training and Orientation Agenda and Staff Training and Orientation Record.

1. Indicate proposed training modules using manufacturer-produced demonstration and training video recordings for systems, equipment, and products in lieu of video recording of live instructional module.

B. Qualification Data: For facilitator and/orinstructor.

C. Attendance Record: For each training module, submit list of participants and length of instruction time.

D. Evaluations: For each participant and for each training module, submit results and documentation of performance-based test.

1.05 CLOSEOUT SUBMITTALS

A. Demonstration and training video recordings, including pre-produced video recordings as applicable: Submit two (2) copies within seven (7) days of end of each training module.

1. Identification: On each copy, provide an applied label with the following information:

a. Name of Project.

b. Name and address of videographer.

c. Name of Architect.

d. Name of Contractor or Construction Manager.

2. Transcript: Prepared and bound in format matching Operating and Maintenance Manuals. Mark appropriate identification on front and spine of each binder. Include a cover sheet with same label information as the corresponding video recording. Include name of Project and date of video recording on each page.

3. At completion of training, submit complete training manual(s) for Owner's use prepared and bound in format matching Operating and Maintenance Manuals and also in PDF electronic file format.

1.06 COORDINATION

A. Coordinate instruction schedule with Owner's operations. Adjust schedule as required to minimize disrupting Owner's operations and to ensure availability of Owner's personnel.

B. Coordinate instructors, including providing notification of dates, times, length of instruction time, and course content.

C. Coordinate content of training modules with content of approved emergency, operation, and maintenance manuals. Do not submit instruction program until operating and maintenance data has been reviewed and approved by Architect/Engineer.

D. Furnish minimum demonstration and training instruction time as described within the following table for architectural, plumbing, fire protection, HVAC and electrical systems and components. ***Contractor shall confirm actual training requirements with Project A/E and Owner prior to issuance of contract documents for subcontractor proposals.***

Equipment / System	Spec Section	Total Hours
Cut Stone	04 43 30	1 Hr during const.
Composite Metal Building Panels	07 42 43	1 Hr during const.
Metal-Framed Curtain Wall	08 44 13	1 Hr during const.
Vertically Folding Operable Partitions	10 22 26.13	1 Hr
Window Washing System	11 24 23	1Hr

Equipment / System	Spec Section	Total Hours
Laboratory Equipment	11 53 00	1 day
Fume Hoods & Exhaust Devices	11 53 13	2 Hrs
Shades	12 24 00	1 Hr
Controlled Environmental Rooms	13 21 00	4 Hrs
Chillers and System	20 08 00	4 Hrs
Boilers and Heating System and PRV Station	20 08 00	4 Hrs
HVAC Piping Systems	20 08 00	4 Hrs
Air Compressors and Dryers	20 08 00	4 Hrs
Air Handler Units	20 08 00	4 Hrs
Supplementary Supply Fans	20 08 00	2 Hrs
Return Fan/Relief Fan	20 08 00	2 Hrs
Air Terminal Units	20 08 00	2 Hrs
Computer Room AC Units	20 08 00	8 Hrs
Stairwell Fans	20 08 00	2 Hrs
Specialty Exhaust Fans	20 08 00	4 Hrs
Restroom Central Exhaust Fans	20 08 00	2 Hrs
Domestic Hot Water Circulating System	20 08 00	2 Hrs
Domestic Water Booster Pumps	20 08 00	2 Hrs
Domestic Water Storage/Break Tank	20 08 00	2 Hrs
Water Softeners	20 08 00	2 Hrs
Pure Water Production Equipment	20 08 00	2 Hrs
Medical Compressed Gas Cylinder Manifolds	20 08 00	2 Hrs
Laboratory Compressed Gas Manifolds	20 08 00	4 Hrs
Medical Gas and Vacuum System Alarms	20 08 00	2 Hrs
Laboratory Gas and Vacuum System Alarms	20 08 00	2 Hrs
Sump Pumps	20 08 00	2 Hrs
Sewage Ejector	20 08 00	2 Hrs
Fire Pump System	20 08 00	2 Hrs
Dry Pipe Fire Sprinkler Systems	21 13 17	2 Hrs
Fire Protection Water Tank	21 41 24	8 Hrs
Domestic Water Heaters (Natural Gas Fired)	22 34 36	2 Hrs
Laboratory Vacuum & Gas Piping	22 60 53	4 Hrs
Laboratory Vacuum Pump Systems (Rotary Claw)	22 62 21	4 Hrs
High Purity Water System	22 67 13	8 Hrs
Variable Frequency Drives	23 05 13	8 Hrs
Heat Recovery Chiller	23 64 20	8 Hrs
Fuel Oil Piping Systems	23 11 13	16 Hrs
BAS Commissioning	25 08 00	8 Hrs
Lighting Controls	26 08 00	8 Hrs
Emergency Power System	26 08 00	16 Hrs
Uninterruptible Power Supply	26 08 00	8 Hrs
4160 Volt Switchgear	26 08 00	8 Hrs
Generator Paralleling Gear	26 08 00	16 Hrs
Power Status and Monitoring System (PSMS)	26 08 00	2 Certs 8 Hrs
600 Volt Generator Paralleling Switchgear	26 32 15	16 Hrs
Automatic Transfer Switches	26 36 23	8 Hrs
Lightning Protection	26 41 00	1 Hr during const.
Electronic Security - Systems Startup	28 00 00	16 Hrs
Electronic Security	28 00 00	16 Hrs/ 5 Days

Equipment / System	Spec Section	Total Hours
Fire Alarm & Smoke Detector Systems - Training	28 30 00	20 Hrs / 3-4 Hrs w/ 8Hrs follow up
Gate Operators	32 31 20	1 Hr
Irrigation Systems	32 80 00	1 Hr
Aircuity	23 09 10	8Hrs

PART 2 - PRODUCTS

2.01 INSTRUCTION PROGRAM

A. Instruction Program Structure: Develop an instruction program that includes individual training modules for each integrated system operations and for equipment not part of a system, as required by the Owner's training requirements and by individual Specification Sections.

B. Pre-instruction Meeting: Conduct a meeting at the Project site to review methods and procedures related to demonstration and training including, but not limited to, the following:

1. Inspect and discuss locations and other facilities required for instruction.

2. Review and finalize instruction schedule and verify availability of educational materials, instructors' personnel, audiovisual equipment, and facilities needed to avoid delays.

3. Review required content of instruction.

4. For instruction that must occur outdoors, review forecasted weather conditions and procedures to follow if conditions are unfavorable.

C. Training Plan:

1. Contractor shall submit a written training plan, referred to as the Training Plan, to the Owner for review and approval. Training Plan shall cover the following elements.

a. Equipment and related systems included in training.

b. Intended audience.

c. Location of training.

d. Objectives.

e. Subjects covered.

f. Duration of training on each subject.

g. Instructor for each subject.

h. Methods (classroom lecture, video, Project site walk-through, actual operational demonstrations, written handouts, etc.).

i. Instructors and qualifications.

2. Contractor shall coordinate, schedule and complete the training related to all equipment specified in the Contract Documents. Contractor may utilize the installing subcontractor and/or manufacturers' representative or others approved in advance by Owner for specific portions of equipment or systems training.

3. Owner must approve any deviations from the Contract Document requirements prior to the Contractor developing the Training Plan.

4. Contractor shall conduct classroom-style training session followed by field demonstrations of system operation. When equipment or a system requires both demonstration and training, Contractor may combine the demonstration and training provided that the Contractor obtains the Owner's approval at least ten (10) days prior to the demonstration and training.

5. Contractor shall use Operating and Maintenance Manuals and the Equipment Matrix as a basis for instructing Owner's staff regarding system operation. Contractor shall review contents of Operating and Maintenance Manuals and review equipment data and performance verification to Owner as part of Owner training. This instruction and data review should be held in a classroom environment.

6. As a minimum, Contractor shall provide training on all systems including, but not limited to, the following (as applicable to the Project):

    a. Architectural Items.

    b. Heating, Ventilating, and Air Conditioning Airside and Waterside Systems.

    c. Building Automation System.

    d. Electrical Systems.

    e. Life Safety Systems (including Fire Alarm, Stairwell Pressurization, Fire Protection, and Smoke Containment, Control, and Response System).

    f. Elevators/Escalators.

    g. Refrigeration Systems.

    h. Lighting Fixtures and Control Systems.

    i. Fire Alarm System.

    j. Communications Systems (including Wired and Wireless Networks, Data, Nurse Call).

    k. Emergency Power and Uninterruptible Power Supply (UPS) Systems.

    l. Security System.

    m. Domestic and Process Water Systems.

    n. Medical Gas and Vacuum Systems.

    o. Laboratory Gas and Vacuum Systems.

    p. Any other major system not identified above.

7. Training shall include:

   a. Usage of the printed installation, operation and maintenance instruction material included in the Operating and Maintenance Manuals.

   b. Review of the written operating and maintenance instructions emphasizing safe and proper operating requirements, preventative maintenance, special tools needed and spare parts inventory suggestions. The training shall include start-up, operation in all modes possible, shutdown, seasonal changeover and any emergency procedures.

   c. Discussion of relevant health and safety issues and concerns.

   d. Discussion of warranties and guarantees.

   e. Common troubleshooting problems and solutions.

   f. Explanation of information included in the Operating and Maintenance manuals and the location of all plans and manuals in the facility.

   g. Discussion of any peculiarities of equipment installation or operation.

D. Training Modules: Develop a learning objective and teaching outline for each module. Include a description of specific skills and knowledge that participant is expected to master. For each module, include instruction for the following as applicable to the system, equipment, or component:

1. Basis of System Design, Operational Requirements, and Criteria: Include the following:

   a. System, subsystem, and equipment descriptions.

   b. Performance and design criteria if Contractor is delegated design responsibility.

   c. Operating standards.

   d. Regulatory requirements.

   e. Equipment function.

   f. Operating characteristics.

   g. Limiting conditions.

   h. Performance curves.

2. Documentation: Review the following items in detail:

   a. Emergency manuals.

   b. Operations manuals.

   c. Maintenance manuals.

   d. Project record documents.

   e. Identification systems.

f. Warranties and bonds.

g. Maintenance service agreements and similar continuing commitments.

3. Emergencies: Include the following, as applicable:

a. Instructions on meaning of warnings, trouble indications, and error messages.

b. Instructions on stopping.

c. Shutdown instructions for each type of emergency.

d. Operating instructions for conditions outside of normal operating limits.

e. Sequences for electric or electronic systems.

f. Special operating instructions and procedures.

4. Operations: Include the following, as applicable:

a. Startup procedures.

b. Equipment or system break-in procedures.

c. Routine and normal operating instructions.

d. Regulation and control procedures.

e. Control sequences.

f. Safety procedures.

g. Instructions on stopping.

h. Normal shutdown instructions.

i. Operating procedures for emergencies.

j. Operating procedures for system, subsystem, or equipment failure.

k. Seasonal and weekend operating instructions.

l. Required sequences for electric or electronic systems.

m. Special operating instructions and procedures.

5. Adjustments: Include the following:

a. Alignments.

b. Checking adjustments.

c. Noise and vibration adjustments.

d. Economy and efficiency adjustments.

6. Troubleshooting: Include the following:

a. Diagnostic instructions.

b. Test and inspection procedures.

7. Maintenance: Include the following:

a. Inspection procedures.

b. Types of cleaning agents to be used and methods of cleaning.

c. List of cleaning agents and methods of cleaning detrimental to product.

d. Procedures for routine cleaning

e. Procedures for routine and preventive maintenance.

f. Instruction on use of special tools.

8. Repairs: Include the following:

a. Diagnosis instructions.

b. Repair instructions.

c. Disassembly; component removal, repair, and replacement; and reassembly instructions.

d. Instructions for identifying parts and components.

e. Review of spare parts needed for operation and maintenance.

PART 3 - EXECUTION

3.01 PREPARATION

A. Assemble educational materials necessary for instruction, including documentation and training modules. Assemble training modules into a training manual organized in coordination with requirements in Section 01 77 00 – Project Close-out Procedures.

B. Provide Owner-approved Operating and Maintenance Manuals minimum fourteen (14) days prior to the scheduled training.

C. Set up instructional equipment at instruction location.

3.02 INSTRUCTION

A. Facilitator: Engage a qualified facilitator to prepare instruction program and training modules, to coordinate instructors, and to coordinate between Contractor and Owner for number of participants, instruction times, and location.

B. Engage qualified instructors to instruct Owner's personnel to adjust, operate, and maintain systems, subsystems, equipment, and equipment components.

C. Scheduling: Provide instruction at mutually agreed upon days and times. For equipment that requires seasonal operation, provide similar instruction at start of each season.

1. Schedule training with Owner at least seven (7) day advance notice.

3.03 FIELD DEMONSTRATION

A. Contractor shall demonstrate in the field: start-up, operation, control, adjustment, trouble-shooting, servicing, maintenance, and shutdown of the system(s) and each component device.

B. Contractor shall demonstrate system performance at each stage of sequence of operation. Contractor shall promptly correct any deficiencies noted during the demonstration and document on a Deficiency report.

C. During any demonstration, should the system fail to perform in accordance with the requirements of the Operating and Maintenance Manual or sequence of operations, the system will be repaired or adjusted as necessary and the demonstration repeated.

D. Contractor shall cooperate with Owner and Owner's Test, Adjust, and Balance Firm for verification testing and final adjustments and balancing as may be indicated in the Contract Documents or as directed by Owner.

E. The manufacturer's representatives and the installing contractor shall demonstrate both system operation and compliance to the Owner's agents and consultants. If coordinated and scheduled appropriately by the Contractor, equipment and/or systems inspections may also serve to provide the required Owner training, if approved in advance by the Owner. Refer to Section 01 45 00 – Project Quality Control.

3.04 DEMONSTRATION AND TRAINING VIDEO RECORDINGS

A. Engage a qualified videographer to record demonstration and training video recordings. Record each training module separately. Include classroom instructions and demonstrations, board diagrams, and other visual aids, but not student practice.

B. Contractor shall furnish to the Owner a professional quality video and audio recording of the training. Owner may select portions of the training to be recorded.

C. Video: Owner training videos shall be delivered to Owner in the MP4 file format container with MPEG-4 video. Video to be encoded using the H.264 codec with the following settings: variable bit rate mode (overall bitrate shall be less than 10 Mb/s), High Profile, 2 consecutive B frames, Closed GOP (GOP of half the frame rate), and CABAC. Resolution shall be progressive scan with a height of 720 pixels, and a preferred width of 1280 pixels (i.e. 720p). Frame rates shall match the source material unless source was recorded using interlaced scan in which case it shall be deinterlaced; for example going from 1080i 60 (60 interlaced fields per second) to 720p (30 progressive frames per second). Audio to be AAC encoded with a bit rate between 128 and 192 Kb/s at a sample rate of 48kHz using Stereo or Stereo + 5.1.

1. Electronic Media: Read-only format compact disc acceptable to Owner, with commercial-grade graphic label.

2. File Hierarchy: Organize folder structure and file locations according to Operating and Maintenance Manual table of contents; confirm with Owner. Provide complete screen-based menu.

3. File Names: Use file names based upon name of equipment generally described in video segment, as identified in Project specifications.

4. Contractor and Installer Contact File: Using appropriate software, create a file for inclusion on the Equipment Demonstration and Training DVD that describes the following for each Contractor involved on the Project, arranged according to Project Manual table of contents:

    a. Name of Contractor/Installer.

    b. Business address.

    c. Business phone number.

    d. Point of contact.

    e. E-mail address.

D. Recording: Mount camera on tripod before starting recording, unless otherwise necessary to adequately cover area of demonstration and training. Display continuous running time.

1. Film training session(s) in segments not to exceed 15 minutes.

    a. Produce segments to present a single significant piece of equipment per segment.

    b. Organize segments with multiple pieces of equipment to follow order of Project Manual table of contents.

    c. Where a training session on a particular piece of equipment exceeds 15 minutes, stop filming and pause training session. Begin training session again upon commencement of new filming segment.

    d. Light Levels: Verify light levels are adequate to properly light equipment. Verify equipment markings are clearly visible prior to recording.

E. Light Levels: Verify light levels are adequate to properly light equipment. Verify equipment markings are clearly visible prior to recording.

1. Furnish additional portable lighting as required.

F. Narration: Describe scenes on video recording by either audio narration by microphone while video recording is recorded or by dubbing audio narration off-site after the recording. Include description of items being viewed.

G. Pre-produced Video Recordings: Provide video recordings used as a component of training modules in same format as recordings of live training.

END OF SECTION 01 79 00

SECTION 01 89 23 – SITE HVAC UTILITIES PERFORMANCE REQUIREMENTS

PART 1 - GENERAL

1.01 RELATED DOCUMENTS

A. Drawings and general provisions of the Contract, including the Uniform General Conditions for University of Texas System Building Construction Contracts (UTUGCs), Owner's Special Conditions, and Division 01 Specification Sections, apply to this Section.

B. Specifications throughout all Divisions of the Project Manual are directly applicable to this Section, and this Section is directly applicable to them.

1.02 SUMMARY

A. Contractor shall furnish all the labor, equipment, materials, and means required to carry out proper and efficient measures wherever and as often as necessary to realize the most efficient consumption of utilities which are consumed during the Contract Time of the Project.

B. Contractor shall prepare an Efficient Utilities Consumption Plan, as described within this Section, for Owner review and approval.

C. The Efficient Utilities Consumption Plan shall only utilize building automation components, mechanical equipment, and other apparatuses being supplied for the Project, as set forth in the Construction Documents.

1.03 REFERENCE STANDARDS

A. The latest published edition of a reference shall be applicable to this Project unless identified by a specific edition date.

B. All reference amendments adopted prior to the effective date of this Contract shall be applicable to this Project.

1.04 DEFINITIONS

Capitalized terms used in this Section shall have the meanings as set forth in the Contract, the UTUGCs, or both, unless otherwise defined or modified below.

A. Efficient Utilities Consumption Plan (EUCP): A document that describes objectives and the processes by which the Contractor will minimize utility consumption for Major Building Systems starting at the time of equipment start-up and through Substantial Completion. The document shall provide occupied/unoccupied schedules for AHU Zones prior to Substantial Completion. The document shall describe how the Contractor will monitor and ensure that Owner-furnished utilities are efficiently utilized to reduce Owner's utility expense throughout the Contract Time.

B. Major Building System(s): All HVAC air handling units rated 5,000 CFM or greater or chilled / heating hot water heat exchanger system(s) where applicable (including chilled / heating hot water pumps) rated at 300 tons or greater.

C. AHU Zone: Defined as temperature-controlled spaces within a HVAC conditioned building on a per floor and air handling unit (AHU) basis. For example, an AHU Zone is a contiguous space having one (or more) air terminal unit (ATU) boxes and its (their) associated controllers connected to an Air Handling Unit rated approximately 5,000 to 10,000 CFM. Larger AHU greater than approximately 10,000 CFM usually consists of multiple AHU Zones based on the design of HVAC system. All spaces of a conditioned building shall be included in a specific AHU Zone

D. Commissioning Plan: A document that provides the structure, schedule, and coordination plan for the Commissioning process from the construction phase through the warranty period. The Commissioning Plan will describe the project and systems to be commissioned, Commissioning process activities, procedures to follow throughout the process, roles and responsibilities for each participant, and general description of testing and verification methods. The Commissioning Plan must satisfy the Owner's Test Requirements. Refer to Owner's Specification Section 01 91 00, General Commissioning.

E. Start-up: The activities where equipment is initially energized, tested, and operated. Start-up is completed prior to Functional Performance Testing. Refer to Owner's Specification Section 01 91 00, General Commissioning.

1.05 EUCP FUNCTIONAL INTENT

A. The Efficient Utilities Consumption Plan's functional intent is to minimize energy consumption and utility costs during the Contract Time. The Contractor shall provide the EUCP as soon as possible and maintain the plan objective during the Contract Time. The following energy optimizations strategies shall be implemented as applicable to the project:

1. Automated modulation of CHW / HW valves in lieu of manual valve positioning for applicable AHU(s) and heat exchanger(s).

2. Automated modulation of fans and pumps through variable frequency drive speeds in lieu of manually setting speeds in HAND mode for electrical motors greater than 10 horsepower.

3. Automated control of outside air intake volumetric flow rates in order not to exceed design parameters or occupancy requirements.

4. Maintain the minimum TECO CHW and steam peak utility demand charge for the project throughout the Contract Time.

5. Automated space temperature set point control per air terminal unit controller under the AHU zoning and implementation of optimal night setback schedules once the associated HVAC air terminal unit controllers have been commissioned and are capable of providing control.

1.06 SUBMITTALS

A. Contractor shall submit a draft EUCP to Owner for review within twenty-one (21) days of issuance of the Notice to Proceed with Construction or within ninety (90) days prior to initial installation of materials or equipment that will undergo Start-up, as directed by Owner

PART 2 - PRODUCTS

2.01 EFFICIENT UTILITIES CONSUMPTION PLAN (EUCP)

A. Efficient Utilities Consumption Plan shall include, but not be limited to, a description of the following as applicable to the Project:

1. The EUCP shall identify all Major HVAC Building Systems for the project which utilize chilled / heating hot water utilities. The EUCP shall disclose in detail how the Contractor intends to efficiently utilize chilled / heating hot water utilities by the Major HVAC Building Systems at the time of equipment Start-up and the duration of the construction process and up to substantial completion.

2. The EUCP shall address what actions shall be taken by the Contractor on Air Handler Units with capacity ratings specified earlier to ensure efficient use of chilled / heating hot water utilities prior to the start-up of the AHUs. The EUCP shall also identify where applicable, the time during the construction process that the Owner will observe the efficient operation of the fan motor speed(s), outside air damper(s), exhaust damper(s) and/or return air dampers.

3. The EUCP shall address what actions shall be taken by the Contractor on heat exchanger systems with capacity ratings specified earlier to ensure the efficient use of chilled / heating hot water utilities prior to the start-up of the AHU. The EUCP shall also identify where applicable, the time during the construction process that the Owner will observe the efficient operation of primary and secondary chilled / heating hot water pumps pressure control.

4. The EUCP shall identify, where applicable, occupied / unoccupied AHU Zones and schedules for spaces. Contractor shall schedule unoccupied time periods to all AHU zone areas as soon as air terminal unit controllers are operating automatically and prior to Substantial Completion.

5. The EUCP shall meet all functional intent requirements to Owner's approval.

B. Manual operator adjustments of building control components or HVAC equipment shall not be acceptable as a EUCP.

PART 3 - EXECUTION

3.01 COMPLIANCE REQUIREMENTS TO THE EFFICIENT UTILITIES CONSUMPTION PLAN

A. The successful execution of the approved EUCP requires cooperation and involvement of all parties throughout the construction process. The Contractor shall coordinate all necessary resources to ensure EUCP objectives are met and maintained during the construction process. Contractor shall ensure all construction activities are in compliance with EUCP

B. Contractor shall solely be responsible to ensure the EUCP objectives do not impede the Commissioning Plan's timely execution.

C. Contractor shall provide EUCP updates and Contractor's compliance documentation on the Owner approved time interval. Contractor shall proceed with updates to the Owner on compliance to the EUCP at no less than 2 weeks after the first Major Building System start-up identified in the EUCP has occurred. These updates shall continue until Substantial Completion.

D. Contractor shall respond in writing to the Owner within 5 business days to confirm that any deficiencies identified by Owner have been corrected and/or provide details, time line, and target dates which are deemed acceptable by the Owner as to when deficiencies to the EUCP will be corrected. At the discretion of the Owner, the Owner shall disclose to the Contractor an estimate of financial losses for lack of timely response to any deficiencies to the EUCP requirements which shall result in Contractor liability of Owner's estimated financial losses. As set forth in the UTUGCs, paragraph 10.3.3, Owner may reduce any Application for Payment to recover these losses,

END OF SECTION 01 89 23

SECTION 01 91 00 – GENERAL COMMISSIONING REQUIREMENTS

PART 1 – GENERAL

1.1. RELATED DOCUMENTS

1.1.1. The Contractor's attention is specifically directed, but not limited to, the Uniform General Conditions for University of Texas System Building Construction Contracts (UTUGCs) for other requirements.

1.1.2. Specifications throughout all Divisions of the Project Manual, which pertain to operable equipment and/or building systems, are directly applicable to this Section, and this Section is directly applicable to them.

1.2. SUMMARY

1.2.1. This Section establishes general and administrative requirements pertaining to commissioning of equipment, devices, and building systems installed on renovation and new construction projects delivered under various contracting methodologies. Technical requirements for commissioning of particular systems and components are established in the Contract Documents.

1.2.2. It is of primary concern that all operable systems installed in the Project perform in accordance with the Contract Documents and the specified Owner's operational needs. During Commissioning, the Contractor systematically demonstrates to the Owner that the operable systems are properly performing in strict accordance with the Contract Documents.

1.2.3. Commissioning requires cooperation and involvement of all parties throughout the construction process. The Contractor shall deliver a successful Commissioning process. Successful Commissioning requires that installation of all building systems complies with Contract Document requirements and that full operational check-out and necessary adjustments are performed prior to Substantial Completion, except for deferred tests approved in advance by Owner.

1.2.4. Commissioning will encompass and coordinate traditionally separate functions of system documentation, Inspection, Prefunctional Checklists and start-up, control system calibration and point-to-point checkout, testing, adjusting, and balancing, validated trend data, Functional Performance Tests, Integrated System Tests, Contractor demonstration to the Owner, and training of Owner’s personnel. This requires assembling all related documentation into one Commissioning Manual. Commissioning is intended to achieve the following specific objectives of the Contract Documents.

1.2.4.1. Verify and document proper installation and design parameters of equipment, systems, and integrated systems.

1.2.4.2. Ensure that operating and maintenance and Commissioning documentation requirements are complete.

1.2.4.3. Provide Owner with functional buildings and systems that meet the Contract Document requirements at Substantial Completion.

1.3. DEFINITIONS

Capitalized terms used in this Section shall have the meanings as set forth in the Contract, the UTUGCs, or both, unless otherwise defined or modified below.

1.3.1. Commissioning: A systematic process confirming that building systems have been installed, properly started, and consistently operated in strict accordance with the Contract Documents, that all systems are complete and functioning in accordance with the Contract Documents at Substantial Completion, and that Contractor has provided Owner adequate system documentation and training. Commissioning includes Deferred Tests, as approved by Owner.

1.3.2. Commissioning Authority: Party employed on the Project, by Owner under a Separate Contract, to provide certain commissioning services as defined herein under Commissioning Authority's Role and Responsibilities. Commissioning Authority does not have authority to alter design or installation procedures without the written approval of Owner and the A/E.

1.3.3. Commissioning Plan: A document that provides the structure, schedule, and coordination plan for Commissioning during the construction phase and through the warranty period. The Commissioning Plan will describe the project and systems to be commissioned, Commissioning activities, procedures to follow throughout Commissioning, roles and responsibilities for each participant, and general description of testing and verification methods. The Commissioning Plan must satisfy all Test Requirements set forth in the Contract Documents.

1.3.3.1 Download an electronic version of the Commissioning Plan Template for submittal purposes at the following website:

https://www.mdanderson.org/content/dam/mdanderson/documents/about-md-anderson/about-us/doing-business/owner's-design-guidelines/supplemental-resources/Commissioning%20Plan%20Template.zip

1.3.4. Commissioning Team: Working group made up of representative(s) from the A/E, Contractor, Test, Adjust, and Balance Firm, Building Automation System vendor, specialty manufacturers and suppliers, Owner, and Commissioning Authority. Contractor will provide ad-hoc representation of Subcontractors on the Commissioning Team as required for implementation of the Commissioning Plan.

1.3.5. Deferred Tests: Functional Performance or Integrated System Tests performed after Substantial Completion, with Owner's approval, due to seasonal requirements, site conditions, or both, that prohibit the test from being performed prior to Substantial Completion.

1.3.6. Deficiency: Condition of a component, piece of equipment, or system that is not in compliance with the Contract Documents.

1.3.7. Factory Testing: Testing of equipment at the factory, by factory personnel with an Owner's representative present, if deemed necessary by Owner.

1.3.8. Functional Performance Test: Test of dynamic function and operation of equipment and systems executed by Contractor. Systems are tested shall be various modes, such as during low cooling or heating loads, high loads, component failures, unoccupied, varying outside air temperatures, life safety conditions, power failure, etc. Systems are run through all specified sequences of operation. Components are verified to be responding in accordance with Contract Documents. Functional Performance Tests are executed after start-ups and Prefunctional Checklists are complete.

1.3.9. Functional Performance Test Procedures: Commissioning protocols and detailed test procedures and instructions in tabular and script-type format that fully describe system configuration and steps required to determine if the system is performing and functioning properly.

1.3.10. Integrated System Test: Test of dynamic function and operation of multiple systems. Integrated System Tests are conducted under various modes, such as fire alarm and emergency situations, life safety conditions, power failure, etc. Systems are integrally operated through all

specified sequences of operation. Components are verified to be responding in accordance with Contract Documents. Integrated System Tests are executed after Functional Performance Tests are complete and prior to Substantial Completion. Integrated System Tests provide verification that the integrated systems will properly function according to the Contract Documents.

1.3.11. Integrated System Test Procedures: Commissioning protocols and detailed test procedures and instructions in tabular and script-type format that fully describe system configurations and steps required to determine if the interacting systems are performing and functioning properly.

1.3.12. Manual Test: Use of hand-held instruments, immediate control system readouts or direct observation to verify performance (contrasted to analyzing trend data to make the "observation").

1.3.13. Non-Compliance Report (NCR): A tool used to document an item or condition that does not meet the Contract Documents.

1.3.14. Prefunctional Checklist: A list of static inspections and material or component tests that verify proper installation of equipment (e.g., belt tension, oil levels, labels affixed, gages in place, sensors calibrated, etc.). The word Prefunctional refers to before Functional tests. Prefunctional Checklists must include the manufacturer's start-up checklist(s).

1.3.15. Start-up: The activities where equipment is initially energized tested and operated. Start-up is completed prior to Functional Performance Tests.

1.3.16. Test, Adjust, and Balance (TAB) Firm: The Owner may engage a Test, Adjust, and Balance Firm for the Project under a Separate Contract. When engaged for the Project, the TAB Firm shall be a part of the Commissioning Team and shall provide services as set forth in the Specifications.

1.3.17. Test Requirements: Requirements specifying what systems, modes and functions, etc. must be tested. Test Requirements are not detailed test procedures. Test Requirements and acceptance criteria are specified in the Contract Documents.

1.3.18. Training Plan: A detailed plan prepared by the Contractor, and reviewed by the Owner, that outlines the training activities, instructors, time durations, and system requirements in accordance with the Contract Documents and Commissioning Plan.

1.3.19. Trending: Data collection of monitoring points using the Building Automation System or dataloggers. Trend definitions are initiated a minimum of 14 days prior to beginning related functional performance tests.

1.4. COORDINATION

1.4.1. Commissioning Team:

1.4.1.1. Owner's Members

1.4.1.1.1. Representatives assigned by Owner's Designated Representative

1.4.1.1.2. Commissioning Authority, when engaged for the Project.

1.4.1.1.3. A/E.

1.4.1.1.4. TAB Firm, when engaged for the Project.

1.4.1.2. Contractor's Members:

1.4.1.2.1. Individuals, each having authority to act on behalf of the entity they represent, explicitly organized to implement all Commissioning activities through coordinated actions.

1.4.1.2.2. Representatives of Contractor, including but not limited to, project manager and commissioning coordinator, Subcontractors, installers, and equipment suppliers. Owner must approve Contractor's commissioning coordinator.

1.4.2. Scheduling:

1.4.2.1. Contractor shall integrate all Commissioning activities into the Baseline Schedule and the Work Progress Schedule. All parties will address scheduling problems and make necessary notifications in a timely manner to expedite all Commissioning activities.

1.4.2.2. Contractor shall provide the initial schedule of primary Commissioning activities at the pre-commissioning meeting. Prior to the first Start-up or Prefunctional Checklist test occurring, Contractor shall have incorporated and integrated all Commissioning activities into the Baseline Schedule and Work Progress Schedule with appropriately linked predecessors and successors.

1.5. ROLES AND RESPONSIBILITIES

1.5.1. Roles and responsibilities of Commissioning Team members are provided in this Section to clarify the commissioning process.

1.5.2. Owner's Role and Responsibilities:

1.5.2.1. Review Specifications containing Commissioning requirements.

1.5.2.2. Provide Owner's Test Requirements to Commissioning Team.

1.5.2.3. Approve the Commissioning Plan, Training Program and Contractor's schedule for completing all Commissioning activities.

1.5.2.4. Participate in Commissioning activities, including the following:

1.5.2.4.1. Commissioning Team meetings.

1.5.2.4.2. Review and approve Commissioning Plan, Training Plan, Prefunctional Checklists, Functional Performance Test Procedures, Functional Performance Tests, Integrated System Test Procedures, Integrated System Tests, Deferred Tests, Trending, Training Plan and other Commissioning documents.

1.5.2.4.3. Attendance at Contractor's training sessions in operation and maintenance of systems and equipment.

1.5.2.4.4. Observation of Contractor's demonstration of systems and equipment operation.

1.5.3. Commissioning Authority's Role and Responsibilities, when engaged for the project.

1.5.3.1. Prepare and submit the Commissioning Plan for Owner's approval.

1.5.3.2. Review, comment and approve on Contractor's schedule for Commissioning activities.

1.5.3.3. Participate in Contractor-led Pre-Commissioning Meeting.

1.5.3.4. Conduct and document Commissioning Team meetings.

1.5.3.5. Perform site visits as necessary or in conjunction with Commissioning Team meetings to observe component and system installations. Attend selected Project progress meetings to obtain information on construction progress.

1.5.3.6. Review and comment on Submittals and coordination drawings applicable to systems being commissioned.

1.5.3.7. Review and comment on Contractor-prepared Prefunctional Checklist and other Contractor-prepared documents, including Operating and Maintenance Manuals and Training Plan.

1.5.3.8. Prior to equipment Start-ups, review the control sequences and coordinate with the Contractor and A/E in order to prepare the Functional Performance Test and Integrated System Test procedures.

1.5.3.9. Witness equipment Start-ups as executed by Contractor.

1.5.3.10. Write Functional Performance Test Procedures and Integrated System Test Procedures for Contractor's execution of tests.

1.5.3.11. Review trend logs, confirm that all control loops are tuned complying within the maximum allowable variance (specified by Owner) prior to performing functional performance testing, and report any deficiencies for correction

1.5.3.12. Witness, verify, and document results of Functional Performance Tests and Integrated System Tests.

1.5.3.13. Coordinate resolution of Deficiencies identified during Commissioning, Deferred Tests, and during the warranty period.

1.5.3.14. Review Contractor's Training Plan.

1.5.3.15. Compile Commissioning documentation for Contractor-prepared Commissioning and Closeout Manual including test documentation, Deficiency reports and solution results; non-compliance issue tracking; and recommendations on continuous commissioning, best practices, and preventive maintenance.

1.5.4. Architect/Engineer's Role and Responsibilities:

1.5.4.1. Attend Commissioning Team meetings.

1.5.4.2. Review and Approve Commissioning Plan, Training Plan, Prefunctional Checklist, Functional Performance Test Procedures, Functional Performance Tests, Integrated System Test Procedures, Integrated System Tests, Deferred Tests, and other Commissioning documents.

1.5.4.3. Review and Approve Contractor's Training Plan.

1.5.4.4. Review and Approve Test, Adjust, and Balance plan as defined in Specification 23 05 90 and 23 05 93.

1.5.4.5. Approve technical requirements for correction of Deficiencies identified during Commissioning, Deferred Tests, and during the warranty period.

1.5.4.6. Review Operating and Maintenance Manuals.

1.5.5. Contractor's Role and Responsibilities:

1.5.5.1 Produce for Owner, Commissioning Authority and A/E's approval, the Commissioning Plan, Prefunctional Checklist, Functional Performance Test Procedures, Integrated System Test Procedures, Equipment Matrix of all devices, systems and equipment supplied, and other Commissioning documents.

1.5.5.1.1 Commissioning Authority will produce the Commissioning Plan, project-specific Functional Performance Test Procedures, and project-specific Integrated System Test Procedures.

1.5.5.1.2 Contractor shall review and provide comments on documents produced by the Commissioning Authority, and shall accept the Commissioning Plan, Functional Performance Test Procedures, and Integrated System Test Procedures as approved by Owner.

1.5.5.2 As the Project progresses, add specific checklists, test procedures, schedules, recorded results, action lists, signoff sheets and other documents for the Commissioning and Close-out Manual. Administer updates to the Commissioning and Close-out Manual with the intent that all Commissioning Team members will have up-to-date documentation as the Commissioning progresses.

1.5.5.3 Provide an individual, subject to Owner's approval, experienced in construction and Commissioning of building systems to organize, schedule, conduct, and document the Commissioning Plan and the Commissioning process. The Contractor shall assign this individual to act as the Contractor's Commissioning Coordinator. The Contractor's Commissioning Coordinator may have additional duties such as MEP Coordinator, but not as Project Manager or Superintendent. Submit qualifications demonstrating the Commissioning Coordinator's technical expertise and experience to the Owner for approval. In the event that Contractor chooses to subcontract its Commissioning obligations, then Contractor must submit the subcontractor's qualifications and personnel to Owner for Owner's approval.

1.5.5.4 Furnish and install systems that meet all requirements of the Contract Documents. Perform construction inspections, Start-ups, Prefunctional Checklists, Functional Performance Tests, and Integrated System Tests in accordance with the Contract Documents and Commissioning Plan. Correct any Deficiencies identified during these processes.

1.5.5.5 Ensure that Commissioning activities are incorporated into the Baseline Schedule and the Work Progress Schedule.

1.5.5.6 Submit inspection and Start-up documentation to Owner in accordance with this Section – 01 91 00 General Commissioning Requirements, Section 01 45 00 – Project Quality Control, Section 01 77 00 – Project Close-out Procedures, Specifications, and the Commissioning Plan.

1.5.5.7 Furnish copies of all Submittals, manufacturers' literature, maintenance information, and any other information required for the Commissioning process. Contractor must submit to Owner installation and checkout materials actually shipped inside equipment and actual field checkout sheet forms used by factory or field technicians. Cross-reference Section 01 31 00 – Project Administration and Section 01 77 00 – Project Close-out

Procedures (Operating and Maintenance Manuals) for additional required documentation.

1.5.5.8 Schedule and conduct pre-installation meetings and pre-commissioning meetings with Subcontractors and equipment suppliers related to Commissioning. Contractor must invite A/E and Owner to attend the pre-installation meetings and pre-commissioning meetings.

1.5.5.9 Provide qualified personnel, including Subcontractors as required, to fully perform the testing and operational demonstrations required by the Contract Documents and the Commissioning Plan, including any Deferred Tests or re-testing related to warranty work.

1.5.5.10 Correct Deficiencies identified during any stage of commissioning prior to proceeding, unless approved by Owner.

1.5.5.11 Provide training to Owner. Coordinate Subcontractor and vendor participation in training sessions.

1.5.5.12 Perform Deferred Tests and make necessary amendments to Operating and Maintenance Manuals and Record Documents for applicable issues identified during the Deferred Tests.

1.5.5.13 Contractor shall be responsible for the following activities and may contract with a Building Automation System (BAS) vendor for these activities.

1.5.5.13.1 Provide on-site technician skilled in software programming and hardware operation to exercise sequences of operation and to correct controls deficiencies identified during Commissioning. Contractor must provide Record Documents reflecting correction of controls deficiencies identified during Commissioning.

1.5.5.13.2 Provide instrumentation, computer, software and communication resources necessary to demonstrate compliance with the Contract Documents and the Commissioning Plan during the Prefunctional Checklist activities, Functional Performance Tests and Integrated System Tests of Building Automation System equipment.

1.5.5.13.3 Attend pre-commissioning meetings and Commissioning meetings including seasonal, post occupancy, or deferred Commissioning meetings and activities as deemed appropriate by Owner. Prepare BAS Training Plans with Commissioning Team and perform training as specified in Contract Documents and Commissioning Plan.

1.5.5.13.4 Maintain comprehensive system calibration and checkout records. Submit records to Owner.

1.5.5.13.5 Set up, capture, format analyze, and report trend logs as requested by the Commissioning Authority and/or Owner to substantiate proper systems operation.

1.5.6 Test, Adjust, and Balance Firm's Role and Responsibilities, when engaged for the project:

1.5.6.1 Attend pre-commissioning meetings and Commissioning Team meetings including seasonal, post occupancy, or deferred Commissioning meetings and activities as deemed appropriate Owner.

1.5.6.2 Submit Test, Adjust, and Balance Plan and forms describing methodology for performance of Test, Adjust, and Balance procedures specific to this Project to Owner/Engineer of record for review.

1.5.6.3 Cooperate with Contractor and Contractor's Building Automation System vendor, if any, during Commissioning.

1.5.6.4 Re-balance as needed to correct any Deficiencies identified during Commissioning.

1.5.6.5 Review BAS graphics and performance tests for accuracy, note deficiencies.

1.5.6.6 Provide T A B data to Contractor and Commissioning Team before Contractor begins Functional Performance Tests.

1.6 EQUIPMENT DOCUMENTATION REQUIREMENTS

1.6.1 Equipment Matrix:

1.6.1.1 Contractor's first submittal of the Equipment Matrix shall contain a complete listing of all equipment, fire dampers, valves, devices, and systems, contained within the Contract Documents to be installed or removed, within twenty-one (21) days of issuance of the Notice to Proceed with Construction and at least seven (7) days prior to submission of the first Application for Payment. This submittal shall be titled as "Equipment Matrix-Contract Compliance". Download an electronic version of this spreadsheet in Microsoft Excel format to use as a template for submittal purposes at the following website:

https://www.mdanderson.org/content/dam/mdanderson/documents/about-md-anderson/about-us/doing-business/owners-design-guidelines/supplemental-resources/Equipment%20Matrix%20Template.xlsx

1.6.1.2 Contractor shall coordinate Contractor's response to this requirement with Contractor's preparation of the Baseline Schedule, Work Progress Schedule, Submittal Schedule, Schedule of Values, and list of all equipment. Refer to Section 01 32 00 – Project Planning and Scheduling and Section 01 31 00 – Project Administration.

1.6.1.2.1 To the extent practical, Contractor should minimize redundant efforts in favor of a single, organized approach to all documentation required for Project equipment, systems, and devices.

1.6.1.3 The Equipment Matrix shall be formatted as a spreadsheet per Owner's template, with capability for printing various selected data columns to meet documentation requirements at various stages of construction, and for different purposes as required by various Technical Sections. The Equipment Matrix shall be updated and submitted as the project progresses using the owners project management system as outlined below:

1.6.1.3.1 As outlined in Section 1.6.1.1, the first submission of the Equipment Matrix, titled "Equipment Matrix – Contract Compliance" is intended to identify and validate the prescribed equipment to be installed or removed per the Contract Documents. Project progresses and submitted periodically as requested by Owner.

1.6.1.3.2 Once Equipment Submittals have been submitted and approved, Contractor shall submit the second submission of the Equipment Matrix titled "Equipment Matrix- Asset Number Request".

1.6.1.3.2.1 The following fields are required to be populated at a minimum prior to the second submission of the Equipment Matrix-Asset Request:

Equipment Plan Designation (Equipment Name), Specification reference, Building ID, Location / Room Number, Asset Short Description, Asset Long Description, System Level Asset (What system it serves), Product submittal reference number(s), Product submittal approval date, Name of installing Subcontractor, Installing Subcontractor contact information, Equipment Manufacturer, Equipment model number, Emergency Power Requirements (as applicable).

1.6.1.3.3 The third submission of the Equipment Matrix is to be titled “Equipment Matrix- True-up”. This submission is intended to capture changes to the contract documents that has occurred during the construction process. This submission may occur more than once throughout the construction process as changes occurs. New items shall comply with Section 1.6.1.3.2.1. Additional or removed equipment shall be identified by a contrasting color from the previously submitted Equipment Matrix.

1.6.1.3.4 The fourth submission of the Equipment Matrix is to be titled “Equipment Matrix-Final”. This submission shall contain a complete populated listing of all equipment, fire dampers, valves, devices, and systems, represented within the Record Documents.

1.6.1.3.5 Provide Owner with an electronic version of the final approved Equipment Matrix at or before Project Substantial Completion.

1.6.1.4 Contractor may elect to combine the Submittal Schedule and Equipment Matrix into one spreadsheet (with multiple tabbed sheets) that Contractor updates as the Project progresses.

1.6.1.5 The Equipment Matrix shall identify all operable devices and equipment grouped by the Construction Specification Institute (CSI) Master Format under the system they are primarily categorized under. When sorted by the column for system identification, the resulting printout must identify all system components, regardless of whether they are mechanical, electrical, or otherwise.

1.6.1.6 Contractor shall continue to update the Equipment Matrix for each device or system. Owner will assist the Contractor in collecting information on Owner-furnished and Contractor-installed equipment. The Equipment Matrix shall include the following column headings, as a minimum, for each device per specification 20 05 53:

1.6.1.6.1 Equipment Plan Designation: Equipment Naming Convention (equipment acronym and sequential number) from Contract Documents.

1.6.1.6.2 Specification Section number.

1.6.1.6.3 Building ID: Shall be obtained from Owner.

1.6.1.6.4 Location / Room Number: Owner’s Wayfinding Codes from Owner’s Space Management database referring to room number or building location. Shall be obtained from Owner.

1.6.1.6.5 Asset Short Description: The asset short description is to be a very short textual description. Type a brief, identifying description for the asset followed by a comma then the “Equipment Plan Designation”. If multiple units, of same type, include equipment ID number from the Construction Documents. This field is limited to 80 characters. Example= Pump, Secondary Chilled Water, SCHWP-01-2B.

1.6.1.6.6 Asset Long Description: A more complete description of the asset to make it clearer to the Owner’s maintenance group. Include any distinguishing details relevant to identifying the asset from other identical units (color, physical location within a room, and so on. Example: Horizontal split case pump located in North end of room.

1.6.1.6.7 System Level Asset: Type of system that the equipment serves. Shall be obtained from Owner. Example: Domestic Hot Water

1.6.1.6.8 Product submittal reference number(s).

1.6.1.6.9 Product submittal approval date.

1.6.1.6.10 Name of installing Subcontractor.

1.6.1.6.11 Installing Subcontractor contact information.

1.6.1.6.12 Equipment Manufacturer.

1.6.1.6.13 Equipment model number.

1.6.1.6.14 Equipment serial number.

1.6.1.6.15 Emergency Power: Note whether equipment is served from emergency power system.

1.6.1.6.16 Equipment manufacturer's representative (Vendor).

1.6.1.6.17 Equipment manufacturer's representative (Vendor) contact information.

1.6.1.6.18 Manufacturer's purchase order number.

1.6.1.6.19 Asset Cost: Equipment purchase price excluding all auxiliary costs.

1.6.1.6.20 Start-up Date: Date of initial equipment or device start-up by the Contractor.

1.6.1.6.21 Prefunctional Checklist completion date.

1.6.1.6.22 Functional Performance Test completion date.

1.6.1.6.23 Integrated Systems Test completion date.

1.6.1.6.24 Substantial Completion date.

1.6.1.6.25 Manufacturer's warranty start date.

1.6.1.6.26 Warranty End Date: The date on which the asset warranty ends. (Default is one year after the Substantial Completion Date unless a longer warranty period is requested or provided.)

1.6.1.7 Owner will furnish the following additional information; allow column headings for this data:

1.6.1.7.1 Asset Number

1.6.1.7.2 Parent ID

1.6.1.7.3 Asset Group Code

1.6.1.7.4 Cost Center

1.6.1.7.5 Critical Factor

1.6.1.7.6 Estimated Asset Life

1.6.1.7.7 Asset Status

1.6.1.7.8 Work Group

1.6.1.7.9 Work Area

PART 2- EXECUTION

2.1 COMMISSIONING PLAN

2.1.1 When a CxA has not been engaged for the project, Contractor shall submit draft Commissioning Plan to Owner and A/E for review within twenty-one (21) days of issuance of the Notice to Proceed with Construction or within ninety (90) days prior to initial installation of materials or equipment that will undergo Start-up and Functional Performance Tests, as directed by Owner.

2.1.2 Contractor shall allow in the Work Progress Schedule a minimum of twenty-one (21) days after the receipt by the Owner of the draft Commissioning Plan Submittal for the Owner to submit review comments to Contractor.

2.1.3 Contractor shall incorporate Owner's review comments and resubmit the revised Commissioning Plan to Owner within fourteen (14) days of receipt of the review comments.

2.1.4 Contractor shall allow in the Work Progress Schedule an additional fourteen (14) days for Owner's approval of the resubmitted Commissioning Plan that incorporates Owner's review comments.

2.1.5 PRE-COMMISSIONING MEETING

2.1.6 Upon obtaining Owner's approval of the Commissioning Plan, Contractor shall schedule, plan, and conduct a Pre-Commissioning Meeting with all parties involved in Commissioning. This meeting should include the major Subcontractors, specialty manufacturers/suppliers, A/E, Test, Adjust, and Balance Firm, Commissioning Authority, and Owner's representatives as participants.

2.1.7 Contractor shall prepare for the Pre-Commissioning Meeting by creating drafts of the following documents with input from the Owner. Commissioning Authority, when engaged for the project, will prepare the Commissioning Plan, Functional Performance Test Procedures and Integrated System Test Procedures.

2.1.7.1 Approved Commissioning Plan including the Equipment Matrix and the Close-out and Documentation Matrix as defined in Section 01 77 00 – Project Close-out Procedures.

2.1.7.2 Baseline Schedule and Work Progress Schedule incorporating Commissioning activities.

2.1.7.3 Prefunctional Checklists.

2.1.7.4 Functional Performance Test Procedures.

2.1.7.5 Integrated System Test Procedures.

2.1.8 Contractor or Commissioning Authority when engaged for the project shall conduct the Pre-Commissioning Meeting and review all aspects of the Commissioning Plan. All

documentation will be discussed and all test procedures and forms reviewed for approval with the Owner. Contractor shall prepare an outline noting responsibilities of the various parties involved in Commissioning for review at this meeting.

2.1.9 The Commissioning Plan shall be reviewed with all attendees and the scope of work discussed. Contractor should be prepared to distribute copies of the pertinent sections to the various Subcontractors involved in Commissioning.

2.1.10 Contractor shall present Commissioning target dates for the Project. These dates and durations shall be incorporated in the Baseline Schedule and the Work Progress Schedule in accordance with Section 01 32 00 – Project Planning and Scheduling.

2.2 REPORTING

2.2.1 Contractor shall provide status reports to Owner at frequencies directed by Owner.

2.2.2 Contractor shall communicate at least monthly with all members of the Commissioning Team, keeping them apprised of Commissioning progress and scheduling changes.

2.2.3 Contractor shall submit Non-Compliance and Deficiency reports to Owner within five (5) days of the date the Non-Compliance or Deficiency is first observed. This includes responses to items noted by the Commissioning Authority.

2.2.4 Contractor shall provide final Commissioning documentation to Owner in accordance with Section 01 77 00 – Project Close-out Procedures, which will become part of the Commissioning and Close-out Manual.

2.3 TEST EQUIPMENT

2.3.1 Contractor shall provide all specialized tools, test equipment and instruments required to execute start-up, checkout, and testing of equipment.

2.3.2 All specialized tools, test equipment and instruments required to execute start-up, checkout, and testing of equipment shall be of sufficient quality and accuracy to test and measure system performance within specified tolerances. A testing laboratory must have calibrated test equipment within the previous twelve (12) months. Calibration shall be NIST traceable. Contractor must calibrate test equipment and instruments according to manufacturer's recommended intervals and whenever the test equipment is dropped or damaged. Calibration tags must be affixed to the test equipment or certificates readily available.

2.4 PREFUNCTIONAL CHECKLIST

2.4.1 Contractor shall provide a Prefunctional Checklist for each system to Owner, Commissioning Authority and A/E for review.

2.4.1.1 Contractor shall provide a draft version of each individual Prefunctional Checklist at a pre-installation meeting for the system. Based on discussions at a pre-installation meeting and subsequent as-constructed conditions, Contractor shall amend and revise each Prefunctional Checklist as appropriate prior to requesting system inspection from the Owner.

2.4.1.2 Contractor shall submit the final approved Prefunctional Checklist and all supporting documentation prior to requesting Start-up and Functional Performance Tests.

2.4.2 Contractor shall review the installation and Contract Documents for each system and shall provide written confirmation of the following if not included in the Prefunctional Checklist.

2.4.2.1 All required test reports and certifications have been submitted and accepted by Owner. Contractor must provide certification of acceptance from manufacturer's representative.

2.4.2.2 Evidence that A/E has approved all Submittals for each component device.

2.4.2.3 All valve charts, wiring diagrams, control schematics, electrical panel directories, etc. have been submitted and approved, and that all devices have been installed in accordance with the Contract Documents.

2.4.2.4 All tabulated data has been submitted for each system and for each device.

2.4.2.5 Each component device has been installed in accordance with applicable codes, the Contract Documents, and manufacturer's written recommendations.

2.5 INITIAL START-UP

2.5.1 Start-up of Independent Devices:

2.5.1.1 Prior to Start-up, Contractor shall not energize or activate, or allow to be energized or activated, any operable device until Contractor has verified to Contractor's own satisfaction that all Contract Document requirements for the operable device have been met and have been documented in the Prefunctional Checklists.

2.5.1.2 Contractor may energize or start-up independent devices for operational check-out and testing only after Contractor and manufacturer's representative or engineering technician (if required by the Contract Documents) have inspected and accepted the installation. The installation must not vary from provisions of the applicable Specifications and the manufacturer's written recommendations for Start-up.

2.5.1.3 When Start-up of equipment or systems have the potential to impact Owner's daily operations or when the Contract Documents require the Owner to witness Start-up, Contractor must provide advance notice to Owner in accordance with the procedures outlined in the Contract Documents prior to Start-up. Contractor may not proceed with Start-up without the Owner's written approval.

2.5.2 Start-up of Building Systems:

2.5.2.1 Contractor shall not energize or activate any building system until the following conditions have been met:

2.5.2.1.1 Contractor has verified that all wiring and support components for equipment are complete and have been tested in accordance with the technical specifications and the manufacturer's written recommendations.

2.5.2.1.2 Contractor has verified that each component device has been checked for proper lubrication, vibration isolation, drive rotation, belt tension, control sequence, or other conditions that may cause damage.

2.5.2.1.3 Contractor has verified that all tests, meter readings, and specified electrical characteristics agree with those required by the equipment or system manufacturer and are in compliance with applicable Contract Documents.

2.5.2.1.4 Contractor has received approved building system final inspection reports. Refer to Section 01 45 00 – Project Quality Control.

2.5.2.1.5 Contractor has provided the Owner and A/E with a written fourteen (14) day notice of intent to start-up the system for operational check-out. The notification procedures outlined in the Contract Documents shall be utilized.

2.5.2.2 Contractor shall perform Start-up under supervision of the responsible manufacturer's representative in accordance with manufacturer's instructions and specification requirements.

2.5.2.3 Contractor shall coordinate and schedule system(s) Start-up in a timely manner so that each component or system can operate for a period of time that is sufficient to evaluate and adjust performance as necessary. All building systems shall be operational and must have been successfully inspected by Owner, through attendance and concurrence with results of the Prefunctional Checklists or as otherwise approved by Owner, prior to the Contractor proceeding with Functional Performance Tests.

2.5.2.4 Contractor shall clearly list outstanding items or initial Start-up and Prefunctional Checklists items not completed successfully. Contractor shall obtain from Subcontractor completed forms documenting any outstanding Deficiency within five (5) days of completion of tests.

2.5.2.5 Contractor shall review completed Deficiency forms to determine if outstanding items prevent execution of the Functional Performance Tests and shall issue any necessary responses to the Commissioning Team.

2.6 REQUEST FOR START-UP AND FUNCTIONAL PERFORMANCE TESTS

2.6.2 Contractor shall notify Owner to request: (1) initial energization or operation of equipment and systems; and (2) an inspection of any system or system component for readiness prior to Functional Performance Tests.

2.6.2.1 Request for Start-up. Contractor must certify that: (1) electrical and mechanical connections have been installed and are safe for initial Start-up; (2) Contractor has complied with Owner's utilities outage notifications; and (3) Start-up will not harm Owner's daily routine operations.

2.6.2.2 Contractor shall complete the applicable Prefunctional Checklist(s) signed by Contractor and CxA if engaged for the project, evidencing Contractor's own thorough inspection of the system and completion of Start-up activities required by the Contract Documents and the Commissioning Plan. Contractor shall submit required supporting documentation, including but not limited to, factory start-up forms, operational testing data, and certifications.

2.6.2.3 Request for Functional Performance Test. Contractor must certify that the Contractor has verified that the installation, Start-up, Prefunctional Checklists, validated trend data and initial operation of the system or component are in accordance with the Contract Documents and the Commissioning Plan including manufacturer's instructions, manufacturer's requirements for maintenance of warranty, and verification that the system is ready for Functional Performance Tests. Contractor shall ensure the updated Equipment Matrix has been submitted and approved prior to the start of Functional Performance. Contractor must certify that the manufacturer's representative has verified that the installation, Start-up, and initial operation of the system or component are in accordance with the manufacturer's published recommendations.

2.6.2 Contractor must obtain Owner's approval prior to proceeding with the Start-up or Functional Performance Test. All construction inspections must be completed. Any and all Deficiencies and all items included in the Non-Compliance Report have been brought into compliance with the Contract Documents.

2.7 FUNCTIONAL PERFORMANCE TESTS

2.7.2 Objective and Scope:

2.7.2.1 The objective of a Functional Performance Test is to demonstrate that the entire individual system operates according to the Contract Documents.

2.7.2.2 Contractor shall operate each system through all modes of operation (occupied, unoccupied, warm-up, cool-down, etc.) for specified system responses. Contractor is required to demonstrate to Owner's satisfaction each operational sequence.

2.7.2 Development of Functional Performance Test Procedures:

2.7.2.1 The purpose of a Functional Performance Test is to verify and document compliance with the stated criteria of acceptance. Contractor or Commissioning Authority if engaged for the project shall develop specific script-type test procedures and associated test forms to verify and document proper operation of each piece of equipment and system.

2.7.2.2 Contractor or Commissioning Authority if engaged for the project shall prepare Functional Performance Test Procedure forms as part of the Commissioning Plan. Once approved by Owner, Contractor shall utilize the forms for all testing activities.

2.7.2.3 Functional Performance Test Procedure forms must include the following:

2.7.2.3.1 System and equipment or component name(s).

2.7.2.3.2 Equipment location and identification number as identified in the Equipment Matrix.

2.7.2.3.3 Unique test identification number and reference to unique Prefunctional Checklist identification numbers for the equipment.

2.7.2.3.4 Date and time of test.

2.7.2.3.5 Project name.

2.7.2.3.6 Participating parties.

2.7.2.3.7 Specific sequence of operation or other specified parameters, including performance data being verified.

2.7.2.3.8 Instructions for setting up a Functional Performance Test.

2.7.2.3.9 Specific script-type, step-by-step procedures to perform a Functional Performance Test, in a clear, sequential and repeatable format that is customized for the system being tested.

2.7.2.3.10 A Pass / Fail checkbox (or data entry box as appropriate) for clearly indicating whether or not proper performance of each part of a Functional Performance Test was achieved and space for actual readings.

2.7.2.3.11 Section for comments.

2.7.2.3.12 Signatures and date block for participant and Owner approvals.

2.7.2 Contractor shall operate, or cause to be operated, each system, device, or equipment item, both intermittently and continuously, for a duration period as indicated in the Specification(s) for each item and/or in accordance with the manufacturer's written recommendations, the Contract Documents and the Commissioning Plan.

2.7.2 Contractor shall operate each component device and each building system to the full extent of its capability, from minimum to maximum, and under automatic control and manual control.

2.7.2 Contractor and manufacturer's representatives shall supervise and coordinate adjustments and balancing of all devices and systems for proper operation prior to requesting a Functional Performance Test(s).

2.7.2.1 Where final balancing of a system is to be performed by Owner, such as final air balancing, Contractor shall provide all services indicated in the applicable Specifications and under this Section, including the following, prior to Owner's final balancing.

2.7.2.1.1 Operational verification of all component devices and the total system, including automatic controls when applicable. Operational verification includes verification that all motors, fans, dampers, and other operable devices are performing in compliance with Specifications throughout their operable range and that all devices are controlled as described in the specified sequence of operation.

2.7.2.1.2 All tabulated data, motor amperage readings, valve tag verifications, and other data required by the Specifications.

2.7.2.2 Where final balancing of a system or particular components of a system are not specifically indicated to be performed by Owner, Contractor shall provide final balancing and adjustments for operation within specified tolerances prior to Functional Performance Test of such system.

2.7.2.3 Coordination and Scheduling. Members of the Commissioning Team, including Owner, may observe Functional Performance Tests of equipment components and systems. Contractor shall provide written notice to Owner at least ten (10) days prior to Functional Performance Tests of equipment components and systems. Contractor shall notify Owner in advance of any changes to the Functional Performance Test schedule. Owner may require Contractor to reschedule Functional Performance Tests to ensure availability of Owner's representative(s).

2.7.2.4 Contractor conducts Functional Performance Tests after system Start-up and Pre-functional Checklists are satisfactorily completed and have been approved by Owner. Air balancing and water balancing shall be completed before Functional Performance Tests.

2.7.2.5 Contractor conducts Integrated System Tests after Functional Performance Tests are satisfactorily completed and have been approved by Owner.

2.8 INTEGRATED SYSTEM TESTS

2.8.1 Objective and Scope:

2.8.1.1 The objective of an Integrated System Test is to demonstrate that each system operates jointly with other systems according to the Contract Documents.

2.8.1.2 Contractor shall operate each system jointly with other systems, through selected modes of operation (fire alarm integration with HVAC, emergency power modes, equipment failures among related systems, etc.) for specified system responses. Contractor is required to demonstrate to Owner's satisfaction each operational sequence.

2.8.2 Development of Integrated System Test Procedures:

2.8.2.1 The purpose of an Integrated System Test is to verify and document compliance with the stated criteria of acceptance. Contractor or Commissioning Authority if engaged for the project shall develop specific script-type test procedures and associated test forms to verify and document proper operation of each piece of equipment and system, jointly and independently of other systems.

2.8.2.2 Contractor or Commissioning Authority if engaged for the project shall prepare Integrated System Test Procedure forms as part of the Commissioning Plan. Once approved by Commissioning Team., Contractor shall utilize the forms for all testing activities.

2.8.2.3 Integrated System Test Procedure forms must include the following.

2.8.2.3.1 System and equipment or component name(s).

2.8.2.3.2 System and equipment location and identification number as identified in the Equipment Matrix.

2.8.2.3.3 Unique test identification number and reference to unique Functional Performance Test identification numbers for the system and equipment.

2.8.2.3.4 Date and time of test.

2.8.2.3.5 Project name.

2.8.2.3.6 Participating parties.

2.8.2.3.7 Specific sequence of operation or other specified parameters, including performance data being verified.

2.8.2.3.8 Instructions for setting up an Integrated System Test.

2.8.2.3.9 Specific script-type, step-by-step procedures to perform an Integrated System Test, in a clear, sequential and repeatable format that is customized for the system being tested.

2.8.2.3.10 A Pass / Fail checkbox (or data entry box as appropriate) for clearly indicating whether or not proper performance of each part of an Integrated System Test was achieved and space for actual readings.

2.8.2.3.11 Section for comments.

2.8.2.3.12 Signatures and date block for participant and Owner approvals.

2.8.3 Contractor shall operate, or cause to be operated, each system, device, or equipment item, both intermittently and continuously, for a duration period as indicated in the Specifications for each item and in accordance with the manufacturer's written recommendations, the Contract Documents and the Commissioning Plan.

2.8.4 Coordination and Scheduling.

2.8.4.1 Members of the Commissioning Team, including Owner may observe Integrated System Tests of equipment components and systems. Contractor shall provide written notice to Owner at least fourteen (14) days prior to Integrated System Tests of equipment components and systems. Contractor shall notify Owner and A/E in advance of any

changes to the Integrated System Test schedule. Owner may require Contractor to reschedule Integrated System Tests to ensure availability of Owner's representative(s).

2.8.4.2 Contractor conducts Integrated System Tests after Functional Performance Tests are satisfactorily completed and have been approved by Owner.

2.9 DOCUMENTATION AND NON-CONFORMANCE

2.9.1 Documentation:

2.9.1.1 Contractor shall witness and document the results of all Functional Performance Tests and Integrated Systems Tests using specific procedural forms developed for that purpose or an approved electronic database program. Prior to testing, Contractor shall submit these forms to the Owner and A/E for review and approval. Contractor will include the completed, filled-out forms in the Commissioning and Close-out Manual.

2.9.2 Non-Conformance:

2.9.2.1 Contractor shall record results of Functional Performance Tests and Integrated System Tests. Contractor or Commissioning Authority if engaged for the project shall report all Deficiencies and non-conformance issues to Commissioning Team.in accordance with the procedures outlined in the Commissioning Plan.

2.9.1.2 At the sole discretion of Owner, Owner may permit Contractor to make corrections of minor Deficiencies observed during a Functional Performance Test or during an Integrated System Test. However, the Contractor must document the Deficiency and resolution on the appropriate report form.

2.9.1.3 Contractor shall make every effort to expedite testing and minimize unnecessary delays, while not compromising the integrity of a Functional Performance Test or an Integrated Systems Test.

2.9.1.4 Contractor, A/E and Owner will attempt to resolve Deficiencies in the following manner.

2.9.1.4.1 When there is no dispute about a Deficiency and Contractor accepts responsibility for correction.

2.9.1.4.1.1 Commissioning Authority if engaged for the project or Contractor documents the Deficiency and the corrective actions, and then proceeds to another test or sequence. A Deficiency report is submitted to Owner. Contractor corrects the Deficiency, completes the statement of correction form certifying that the equipment or system is ready for retesting, and sends the certification to Owner.

2.9.1.4.1.2 Contractor reschedules test with Owner.

2.9.1.4.2 When there is a dispute about whether or not the test indicates a Deficiency or the Contractor's responsibility for correction of the apparent Deficiency.

2.9.1.4.2.1 Commissioning Authority if engaged for the project or Contractor documents the apparent Deficiency. A Deficiency report is submitted to Owner, including the apparent Deficiency.

2.9.1.4.2.2 Contractor facilitates resolution of the Deficiency and provides recommendations to the Owner. Contractor and Owner may bring other parties into the discussions as needed. Final technical

interpretive authority is with the A/E. Final acceptance authority is with the Owner.

2.9.1.4.2.3 Contractor documents the resolution process.

2.9.1.4.2.4 If Owner and the A/E agree with Contractor's interpretation and proposed resolution, Contractor forwards response to Owner. Contractor reschedules test with Owner. Contractor must repeat this process until satisfactory performance and Owner's approval is obtained.

2.10 DEMONSTRATION AND OWNER TRAINING

2.10.1 Contractor, in coordination with Owner shall develop the Training Plan with project specific requirements for Owner Training, after reviewing the different systems to be installed and commissioned. The purpose of the Training Plan is to specifically communicate the required content and training durations required by the Owner based upon the type of equipment and the Owner's past experience.

2.10.2 Refer to Section 01 79 00 - Demonstration and Training for specific requirements.

2.11 DEFERRED TESTS

2.11.1 Deferred Tests:

2.11.1.1 Deferred Tests shall be identified in writing and shall be approved by Owner.

2.11.1.1.1 Contractor shall complete Deferred Tests as part of this Contract during the Warranty Period. Contractor shall schedule this activity with Owner. Contractor shall perform tests and document and correct Deficiencies. Owner may observe the tests and review and approve test documentation and Deficiency corrections.

2.11.1.1.2 Contractor shall incorporate final updates to the Commissioning and Close-out Manual.

2.11.1.1.3 If any check or test cannot be completed prior to Substantial Completion due to the building structure, required occupancy condition, or other condition, performance of such test may be delayed to later in the Warranty Period, upon approval of the Owner.

2.11.1.1.4 Commissioning of systems which provide Life Safety (passive or active) to the building and its occupants shall not be deferred unless occupancy is deferred.

2.12 COMMISSIONING DOCUMENTATION

2.12.1 Contractor shall compile and organize all Commissioning documentation into a Commissioning and Close-out Manual and deliver to the Owner as specified in Section 01 77 00 – Project Close-out Procedures.

2.12.2 The Commissioning and Close-out Manual submitted to Owner shall contain all Commissioning documentation, including, but not limited to:

2.12.2.1 The Commissioning Plan.

2.12.2.2 Final Baseline Schedule filtered to show only the Commissioning activities.

2.12.2.3 Completed Equipment Matrix.

2.12.2.4 Completed Prefunctional Checklists with all required attachments,

2.12.2.5 Functional Performance Test Procedures and results.

2.12.2.6 Integrated System Test Procedures and results.

2.12.2.7 Training Plan and all supporting documentation. Refer to Section 01 79 00 – Demonstration and Training for specific requirements.

2.12.2.8 Deficiency reports and solution results.

2.12.2.9 Recommendations on continuous Commissioning, best practices, and preventive maintenance.

2.12.2.10 Refer to Section 01 77 00 – Project Close-out Procedures for additional Close-out documentation to be included in the Commissioning and Close-out Manual.

END OF SECTION 01 91 00

Attachment No. 1 – Equipment Matrix

Download an Electronic Version of the Equipment Matrix template at the following Internet Address:

https://www.mdanderson.org/content/dam/mdanderson/documents/about-md-anderson/about-us/doing-business/owners-design-guidelines/supplemental-resources/Equipment%20Matrix%20Template.xlsx

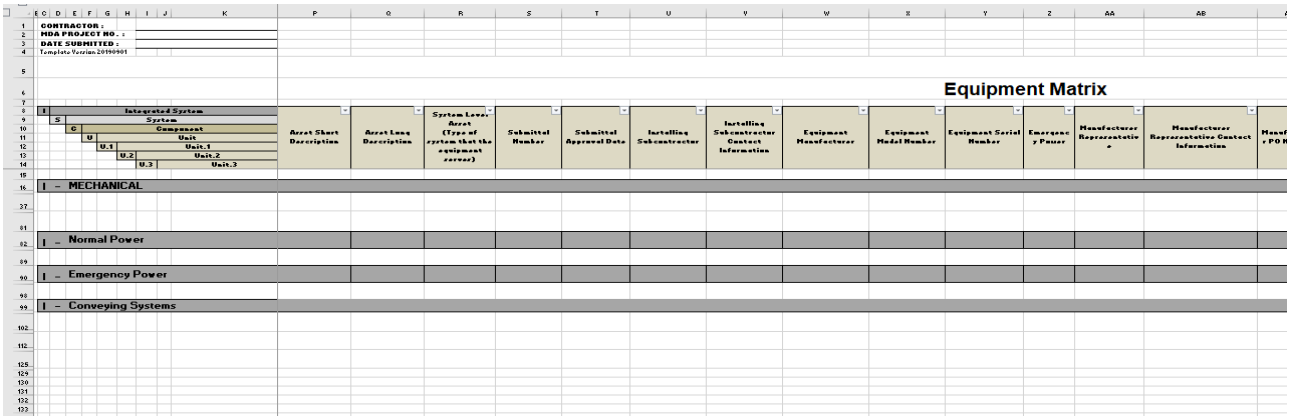

CONTRACTOR :
MDA PROJECT NO. :
DATE SUBMITTED :
Template Version 20190901

Equipment Matrix

I Integrated System
S System
C Component
U Unit
U.1 Unit.1
U.2 Unit.2
U.3 Unit.3

Asset Short Description	Asset Long Description	System Level Asset (Type of system that the equipment serves)	Submittal Number	Submittal Approval Date	Installing Subcontractor	Installing Subcontractor Contact Information	Equipment Manufacturer	Equipment Model Number	Equipment Serial Number	Emergency Power	Manufacturer Representative	Manufacturer Representative Contact Information	Manufacturer PO Number

I – MECHANICAL

I – Normal Power

I – Emergency Power

I – Conveying Systems

EXHIBIT C

ALLOWABLE LINE ITEMS FOR GENERAL CONDITIONS COSTS

ALLOWABLE LINE ITEMS FOR GENERAL CONDITIONS COSTS

On-Site Project Management Staff

- Assistant Superintendent(s)
- Commissioning Coordinator
- Field Office Engineer(s)
- Project Expeditor(s)
- Project Manager(s)
- Out-of-State Project Specific Travel*
- Project Scheduler
- Project Support Staff
- Safety Coordinator/Assistant(s)
- Superintendent(s)
- Layout/Survey Personnel†

Bonds and Insurance

- Builder's Risk Insurance (unless provided by Owner)
- General Liability Insurance (unless ROCIP)
- Payment and Performance Bonds (not trade contractor's or Subcontractor's bonds)
- Other Project Insurance (only as required by Contract Documents)

Temporary Project Utilities

- Dumpsters
- Temporary Toilets
- Monthly Hardwire Telephone /Internet Service
- Street Sweeper Rental and Barricades
- Temporary Water Distribution and Meters
- Temporary Electrical Distribution and Meters
- Site Erosion Control (BMP) and Project Entrance(s)
- Project Water
- Temporary Fire Protection
- Telephone / Internet System Installation
- Fencing and Covered Walkways
- Jobsite 2-way radios
- Project Utilities
- Jobsite Cleanup†

Field Offices & Office Supplies

- Partnering Costs
- Job Photos/Videos
- Project Site Static Web Camera
- Project Specific Signage
- Postage/Special Shipping
- Project Milestone Event(s)*
- Employee Identification System
- Move-In/Out and Office Set up
- Small Tools and Storage Trailers
- Mobilization and Demobilization (Equipment Only)
- First Aid Supplies
- Reproduction Services/Copier
- Monthly Office Trailer Rental Costs
- Monthly Office Supplies
- Project Reference Manuals
- Security System/Watchman
- Safety Material and Equipment (Overhead Tie-Off Points)
- Drinking Water and Accessories
- Office Clean-Up/Janitorial Services

* Specific justification and all estimated costs shall be submitted and approved by the Owner prior to any travel or event.

† To be included as General Conditions Cost to extent not procured through subcontract awarded through a competitive process.

EXHIBIT D

GUARANTEED MAXIMUM PRICE PROPOSAL FORM

MD Anderson Agreement No. _____
MD Anderson Project No. _____

GUARANTEED MAXIMUM PRICE PROPOSAL FORM

Construction Manager hereby submits to Owner pursuant to the provisions of Article VII of the Agreement by and between Owner and _____ dated _____, 20__ (the Agreement"), a Guaranteed Maximum Price (GMP), as defined in the Agreement, for the _____ Project, MD Anderson Project Number _____, based on the Contract Documents (as defined by the Agreement) developed for the Project, as follows:

1. A not-to exceed amount for the Cost of the Work pursuant to the Agreement: $ _____.__
2. A not-to exceed amount for the General Condition Costs pursuant to the Agreement: $ _____.__
3. A not-to exceed amount for the Construction Manager's Contingency pursuant to the Agreement: $ _____.__
4. A lump sum amount for the Construction Phase Fee pursuant to the Agreement: $ _____.__
5. Owner's Special Cash Allowance provided by Owner: $ _____.__
6. Owner's Construction Contingency provided by Owner. This is a lump sum amount from which changes are to be paid in accordance with the Uniform General Conditions for University of Texas System Building Construction Contracts. Any unused amount will be deducted from the Guaranteed Maximum Price by Change Order. $ _____.__
7. TOTAL OF GMP LINE ITEMS 1 THROUGH 6: $ _____.__

This figure shall be the Guaranteed Maximum Price (GMP), which we hereby propose to Owner.

Corporations/LCC's: Attest:

(Construction Manager's Name)

By:

_____
Corporate Secretary

_____
(original signature)

_____
(name and title typed)

Other business forms: Witness:

_____

Date:_____

EXHIBIT D – ATTACHMENT 1

GUIDELINES FOR THE PREPARATION OF THE GUARANTEED MAXIMUM PRICE PROPOSAL

1. CONTRACT REQUIREMENTS:

The requirements for the GMP Proposal are defined herein and other related requirements are included throughout the Agreement. In the event of irreconcilable conflict between the GMP Proposal and the Agreement, the interpretation that provides for the higher quality of material and/or workmanship shall prevail.

The GMP Proposal shall adopt and incorporate all of the terms and conditions of the Agreement. Any exceptions to or modifications of such terms and conditions proposed shall not be effective unless they are expressly stated and conspicuously identified in the GMP Proposal and are specifically accepted and approved by Owner. In general, proposed revisions or modifications to the language, terms or conditions of the Agreement will not be accepted.

2. PRE-SUBMITTAL REQUIREMENTS:

A. Scope Definition: Prior to submitting the GMP Proposal, Construction Manager shall thoroughly review the documents upon which the GMP is to be based with Owner and determine if the scope is sufficiently defined and identify those areas requiring additional scope definition. As a minimum the following should be defined: Program building size, site limits and access, utility systems (existing and new), complete building systems descriptions, materials outline by division, MEP systems descriptions including materials, MEP system options shall be defined and accepted.

B. Schedule: The anticipated Date of Commencement and Substantial Completion date shall be coordinated and approved by Owner.

C. Value Engineering: Proposed value engineering items included in the proposed GMP shall be updated from previously submitted value engineering efforts and should reflect the "final acceptance" of VE items, which are part of the proposed scope of work. The VE schedule shall identify current acceptance and the date of acceptance in an adjacent column. VE items must be resolved and accepted by Owner prior to Construction Manager submitting the GMP Proposal.

D. Pre-submittal Conference: Construction Manager shall schedule a conference with the Project Manager no later than six (6) weeks prior to submitting the GMP Proposal to Owner. Issues regarding the required materials to be included in the GMP Proposal should be reviewed so that there is a clear understanding of the format and contents of each division of work to be submitted. Construction Manager shall obtain a copy of the "Owner Standard Schedule of Values Format" from the Project Manager. Additionally, a review of acceptable "General Conditions Cost" items, as defined in the Agreement, is required.

3. CONSOLIDATION OF REVIEW COMMENTS:

Owner and Owner's Consultants shall provide review comments. Construction Manager shall consolidate all responses to those groups into TAB 9 of the document. Each Owner comment shall have a corresponding answer directly below the original comment. A reply to each Owner

comment is required even if only a clarification is required. Each reply shall state where in the GMP Proposal the corresponding information may be located.

4. GENERAL REQUIREMENTS;

Construction Manager shall submit the GMP Proposal, in the format described herein, at the phase specified by Owner. GMP Proposals substantially deviating from the requirements set forth will be returned to Construction Manager for re-submittal. GMP Proposals not in compliance with the format, which result in substantial delay, will be the responsibility of Construction Manager and may not extend the Contract Time or Substantial Completion date.

5. MULTIPLE STAGES:

In order to expedite the Project, Owner and Construction Manager may execute the Project in multiple stages with a GMP being established for each stage. The GMP for each stage shall be incorporated into the Agreement through a Change Order to the previously accepted GMP Proposal(s), as identified in Article 7. The requirements for the submission and acceptance of GMP Proposals for each stage shall be identical to the requirements for the submission and acceptance of the first GMP Proposal.

6. GMP PROPOSAL PACKAGE

The GMP Proposal shall be bound in 3-ring notebook or spiral notebook and entitled "Guaranteed Maximum Price Proposal". Below it the following items shall be shown:

- Submittal number (e.g. Submittal #1)
- Date of Submittal
- MD Anderson Project Name
- MD Anderson Project Number

Since several submittal revisions may be submitted, Construction Manager shall always indicate which submittal number is currently being submitted.

All pages within each tab shall be numbered.

The proposal shall be organized in the order described below:

TABLE OF CONTENTS

- List all the following items. Provide a brief summary of the major components within each Tab.

TAB 1 – Guaranteed Maximum Price Proposal Form

- Refer to the GMP Proposal form attached to this Exhibit. Type in the cost amounts and sign, attest, date and seal the form.
- In addition to the bound notebooks, provide two (2) loose original executed copies. (Do not bind into spiral notebooks.)
- Do not alter any language from the original document without prior approval from Owner's Designated Representative.
- Do not electronically alter the document.
- Each line item cost must exactly match the corresponding cost summary shown on the TAB 6 Proposed GMP Breakdown.

- Provide a Corporate Resolution or Articles of Organization, stating individual's authorization to execute contracts on behalf of the corporation, for any individual signing the GMP Proposal, who is not the President or CEO of the firm.

TAB 2 - Executive Project Summary

- State any amended services or scope changes included in the GMP Proposal.
- Provide a brief project summary defining the proposed scope of work associated with the construction phase work included in the GMP Proposal.
- Include the description of building type, size, character and general materials.
- Summarize any relationship with existing structures, unusual site conditions, utility issues, or conditions effected by other governmental agencies (i.e. right-of-way issues)
- State the proposed Commencement Date and Substantial Completion date.

TAB 3 - Project Team

- List the various teams and the team members, in graphic and written form, including names, titles, job responsibilities, and contact information. Identify the Project Safety Specialist(s) and her or his (their) duties. If Project Safety Specialist has changed from the individual approved in the RFQ, clearly and conspicuously identify the change in a statement on a separate page.
- Identify all consultants.

TAB 4 - List of Documents

- Drawings Index – provide detailed listing of each sheet number, sheet title, original date of drawing, revised date of drawing

- Specification Index:
  - Provide a detailed listing of each specification section required by Owner as identified in the Agreement (see the Exhibit for "Owner's Division 00 and Division 01 Specifications")
  - Provide a detailed listing of all other spec sections describing the project.
  - Specifications shall be organized by CSI Division format. State the name, original date of issue, and a column for revision date.

TAB 5 - Qualifications and Value Engineering

- Qualifications – A summary of all qualifications and assumptions organized by drawing sheet number or by specification sections to match those in TAB 4.
- Exclusions – A summary of exclusions organized by drawing sheet number or by specification section.
- Substitutions – A summary of substitutions to materials or systems described by drawing sheet number or by the specifications listed in TAB 4. Organize by specification section.
- Value Engineering Recommendations – List all items proposed to date and for each item identify if the item is accepted by Owner and included in the proposed GMP. State the date of acceptance. In addition identify those VE items not currently accepted. State if the proposed price is good for a limited time period.
- Alternates List. State the amount of each alternate and the last date in which the price is good in the event the alternate is not currently included in the proposed GMP.

TAB 6 – Proposed GMP Breakdown

- Provide an Estimated Construction Cost breakdown on Owner's Standard Schedule of Values for Cost of the Work based on anticipated subcontracts organized by CSI Division format, General Condition Costs per Exhibit, Construction Manager's Contingency, Construction Phase Fee, and any Owner's Special Cash Allowance items or Owner's Construction Contingency, as identified by Owner.

The U.T. System Schedule of Values - Contractor's Estimate Continuation Sheet (8 1/2" x 11" Sheet ONLY)

OFPC Project No.:							Project Address:							
OFPC Project Name:							Application For Payment Number:							
CM-R/DB Name:							Application Period: From			To				
A	B	C	D	E	F	G	H	I	J	K	L	M	N	O
CSI Section / Work Breakdown Structure	Description of Work / Subcontractor Name / Specification Section	Initial Proposed Line Item Value	Actual Subcontract Amount at Buyout	Contingency Allocation	Delta (Proposal to Actual)	Subcontract, Purchase Order or Vendor No.	Detailed Breakdown of Contract Line Items	Total Amount Previously Requested & Percent		Current Application: This Period Amount & Percent		Current Application: Total Amount Completed To Date & Percent		Balance to Finish Including Retainage
	Column Equations		C'	C'	C - D + E		D'	M'	N'	M - I	K / H	I + K	M / H	H - (M x 95%)
Preconstruction (Part I) Services														
Programming		$ -	$ -	$ -	$ -	N/A	$ -	$ -	0%	$ -	0%	$ -	0%	N/A
Schematic Design		$ -	$ -	$ -	$ -	N/A	$ -	$ -	0%	$ -	0%	$ -	0%	N/A
Design Development		$ -	$ -	$ -	$ -	N/A	$ -	$ -	0%	$ -	0%	$ -	0%	N/A
Contract Documents		$ -	$ -	$ -	$ -	N/A	$ -	$ -	0%	$ -	0%	$ -	0%	N/A
Bidding		$ -	$ -	$ -	$ -	N/A	$ -	$ -	0%	$ -	0%	$ -	0%	N/A
Owner's Special Cash Allowance		$ -	$ -	$ -	$ -	N/A	$ -	$ -	0%	$ -	0%	$ -	0%	N/A
Preconstruction (Part I) Services Subtotal		$ -	$ -	$ -	$ -	N/A	$ -	$ -	0%	$ -	0%	$ -	0%	N/A
Construction (Part II) Services														
General Conditions (Breakdown per Exhibit I)														
Project Management		$ -	$ -	$ -	$ -	N/A	$ -	$ -	0%	$ -	0%	$ -	0%	$ -
Bonds & Insurance		$ -	$ -	$ -	$ -	N/A	$ -	$ -	0%	$ -	0%	$ -	0%	$ -
Temporary Utilities		$ -	$ -	$ -	$ -	N/A	$ -	$ -	0%	$ -	0%	$ -	0%	$ -
Field Office& Construction Supplies		$ -	$ -	$ -	$ -	N/A	$ -	$ -	0%	$ -	0%	$ -	0%	$ -
General Conditions Subtotal		$ -	$ -	$ -	$ -	N/A	$ -	$ -	0%	$ -	0%	$ -	0%	$ -
Cost of Work														
	Sitework	$ -	$ -	$ -	$ -		$ -	$ -	0%	$ -	0%	$ -	0%	$ -
	Concrete	$ -	$ -	$ -	$ -		$ -	$ -	0%	$ -	0%	$ -	0%	$ -
	Masonry	$ -	$ -	$ -	$ -		$ -	$ -	0%	$ -	0%	$ -	0%	$ -
	Metals	$ -	$ -	$ -	$ -		$ -	$ -	0%	$ -	0%	$ -	0%	$ -
	Woods & Plastics	$ -	$ -	$ -	$ -		$ -	$ -	0%	$ -	0%	$ -	0%	$ -
	Thermal & Moisture Protection	$ -	$ -	$ -	$ -		$ -	$ -	0%	$ -	0%	$ -	0%	$ -
	Doors & Windows	$ -	$ -	$ -	$ -		$ -	$ -	0%	$ -	0%	$ -	0%	$ -
	Finishes	$ -	$ -	$ -	$ -		$ -	$ -	0%	$ -	0%	$ -	0%	$ -
	Specialties	$ -	$ -	$ -	$ -		$ -	$ -	0%	$ -	0%	$ -	0%	$ -
	Equipment	$ -	$ -	$ -	$ -		$ -	$ -	0%	$ -	0%	$ -	0%	$ -
	Furnishings	$ -	$ -	$ -	$ -		$ -	$ -	0%	$ -	0%	$ -	0%	$ -
	Special Construction	$ -	$ -	$ -	$ -		$ -	$ -	0%	$ -	0%	$ -	0%	$ -
	Conveying Systems	$ -	$ -	$ -	$ -		$ -	$ -	0%	$ -	0%	$ -	0%	$ -
	Mechanical	$ -	$ -	$ -	$ -		$ -	$ -	0%	$ -	0%	$ -	0%	$ -
	Electrical	$ -	$ -	$ -	$ -		$ -	$ -	0%	$ -	0%	$ -	0%	$ -
Cost of Work Subtotal		$ -	$ -	$ -	$ -	N/A	$ -	$ -	0%	$ -	0%	$ -	0%	$ -
Contractor's Contingency		$ -	$ -	$ -	$ -	N/A	$ -	$ -	0%	$ -	0%	$ -	0%	$ -
Construction Phase Fee		$ -	$ -	$ -	$ -	N/A	$ -	$ -	0%	$ -	0%	$ -	0%	$ -
Owner's Special Cash Allowance		$ -	$ -	$ -	$ -	N/A	$ -	$ -	0%	$ -	0%	$ -	0%	$ -
Owner's Construction Contingency		$ -	$ -	$ -	$ -	N/A	$ -	$ -	0%	$ -	0%	$ -	0%	$ -
Construction (Part II - GMP) Services Subtotal		$ -	$ -	$ -	$ -	N/A	$ -	$ -	0%	$ -	0%	$ -	0%	$ -
Contract (Part I + Part II Services) Total		$ -	$ -	$ -	$ -	N/A	$ -	$ -	0%	$ -	0%	$ -	0%	$ -

(An electronic copy is available upon request)

- Construction Manager shall provide a breakdown for all Allowable General Conditions Costs by line item, unit cost and duration.
- Construction manager shall clearly state the different types of insurance coverages included in the General Conditions Costs and shall include line items for each type of insurance coverage including builders risk and auto.
- On a separate page state whether the proposed GMP includes provisions to incorporate Owner's ROCIP program, which will affect insurance coverages provided by Construction Manager.
- For projects which involve renovation of an existing building or a project which is being constructed adjacent to or connected to an existing building, the GMP Proposal shall include a page which states whether or not the builders risk insurance coverage includes a $5M endorsement for coverage of damages to the Owner's existing property for damages caused by Construction Manager or its Subcontractors.
- Construction Manager may request to include an updated Exhibit, "Construction Manager's Personnel and Monthly Salary Rates" identifying any proposed new staff or proposed rate modifications. If an updated Exhibit is included, Construction Manager shall clearly and conspicuously identify each revision, which shall be subject to the approval by Owner at Owner's sole discretion.

- Identify the CM's Contingency and provide a breakdown or explain the basis for how the amount was established.
- Provide a breakdown of Owner's Special Cash Allowance(s) showing the major items anticipated to be included in this amount. Owner's Project Manager will help to provide this detail.

TAB 7 - Master Project Schedule (Summary Level)

- The Summary Level schedule shall be submitted in a digital format and on paper bound with the GMP Proposal.
- Summary Schedule Requirements
  - The schedule shall comply with the requirements of Owner's Specification Section 01 32 00 and shall form the basis for the "Detail" schedule, which shall be submitted within sixty (60) days following the date of the Notice to Proceed with Construction Services.
  - The schedule shall be a computer-generated Critical Path Milestone schedule developed in Microsoft Project Planner software, or other software as expressly approved by Owner.
  - The schedule shall be presented in "bar chart" form and contain detailed activities for all events and milestones included in Pre-Construction Phase and Construction Phase Services
  - The schedule shall include detailed, logic driven activities for all Construction Service activities scheduled to commence during the first ninety (90) days following the Date of Commencement. The remaining construction activities (those commencing after the first 90 days) may be summarized by trades and may have longer durations than the "detailed" activities mentioned above.
- Total Float
  - The total float indicated on the Master Project Schedule shall be no less than 10% of the total Construction Phase duration (Date of Commencement to Substantial Completion). i.e. - All paths in the schedule must lead to a milestone activity for Substantial Completion, which shall be logic driven and indicate completion within approximately 90% of the time allowed by contract for Owner established Substantial Completion date.

TAB 8 - Procurement Package Strategy

- Construction Manager shall provide a written Procurement Package Strategy for procuring subcontracts including self-performance work (other than General Conditions) as described in Owner's Specification Section 01 31 00.

TAB 9 - Historically Underutilized Business Plan

- Complete the attachments required Owner's Policy of Historically Underutilized Businesses, which is included as an Exhibit to the Agreement.
- For all first and second tier subcontractors currently under contract or anticipated to be contracted with, provide completed documentation as set forth in the policy.
- A completed HUB Subcontracting Plan shall be delivered to Owner at the time of final subcontracting buyout.

TAB 10 - Responses to Review Comments

- For resubmitted GMP Proposals, Construction manager shall include all review comments provided by Owner regarding the GMP Proposal or GMP Proposal re-submittal.
- For each submittal Construction Manager shall provide a written response below each original comment, stating the appropriate response to the issue and include that documentation in this section. **A re-submittal may not be forwarded to Owner without responses to the previous review comments and included under this TAB 10.**
- **Any proposed deviations from the provisions or processes described in the Agreement, contained in this Proposal, shall be approved in writing by Owner's Executive Director of Facilities Planning, Design and Construction.**

EXHIBIT D – ATTACHMENT 2

FORMS FOR PAYMENT AND PERFORMANCE BONDS

(Bonds shall be provided to Owner
after GMP Proposal is accepted and prior to the issuance of the Notice to Proceed with Construction.)

PAYMENT BOND

Surety Bond No._____

STATE OF TEXAS §

KNOW ALL MEN BY THESE PRESENTS:

COUNTY OF §

That we, _____, as Principal, and _____, as Surety, are hereby held and firmly bound unto the State of Texas as Obligee in the penal sum of _____ ($_____) for the payment whereof, the said Principal and Surety bind themselves, their heirs, executors, administrators, and successors, jointly and severally, firmly by these presents.

The conditions of this obligation are such that whereas the Principal entered into a certain contract, hereto attached, and made a part hereof, with the State of Texas, acting by and through the Board of Regents of The University of Texas System for and on behalf of _____ ____, _____, dated _____, _____, for _____ (Project No. _____).

NOW, THEREFORE, the condition of this obligation is such that, if the Principal shall promptly make payments to all claimants as defined in Section 2253.021, Texas Government Code, as amended, of all persons supplying labor and materials in the prosecution of the work provided for in said contract, then this obligation shall be null and void, but otherwise it shall remain in full force and effect.

In the event that the Principal fails to promptly pay when due persons who have supplied labor, materials, or supplies used in the performance of the said contract, the Surety will, upon receipt of notice from the State of Texas or a claim in the form required by law, satisfy all undisputed balances due, and make arrangements satisfactory to the interested parties to resolve all amounts disputed in good faith, but in no event shall the liability of the Surety for the Principal's failure to promptly pay for labor, materials, or supplies exceed the penalty of this bond.

This Surety agrees to pay the State of Texas upon demand all loss and expense, including attorney's fees, incurred by the State of Texas by reason or on account of any breach of this obligation by Surety.

Provided further, that this bond is made and entered into for the protection of all claimants supplying labor and material in the prosecution of the work provided for in said Contract, and all such claimants shall have a direct right of action under the bond as provided

in Section 2253.021, Texas Government Code, as amended. If any legal action is filed upon this bond, venue shall be in the county where the said Contract is to be performed.

By signature hereon, if the amount of this bond exceeds $100,000, then the Surety attests that at the time the bond was executed (and Surety shall provide the Obligee with evidence of the following):

(1) it was a holder of a certificate of authority from the United States Secretary of the Treasury to qualify as a surety on obligations permitted or required under federal law; or

(2) had reinsured any liability in excess of $100,000 by a reinsurer holding a certificate of authority from the United States Secretary of the Treasury.

IN WITNESS WHEREOF, the above bounden parties have executed this instrument under their several seals this _____ day of _____ in the year _____, the name and corporate seal of each corporate party being hereto affixed, and these presents duly signed by its undersigned representative pursuant to authority of its governing body.

(SEAL) _____
Principal

ATTEST:

By: _____ By: _____

_____ _____
(Typed Name and Title) (Typed Name and Title)

(SEAL) _____
Surety

ATTEST:

By: _____ By: _____

_____ _____
(Typed Name and Title) (Typed Name and Title)

Surety's Texas Local Recording Agent or Resident Agent:

_____
(Signature)

_____
(Typed Name)

License No. _____

File No. _____

Address: _____

Telephone No.: _____

Surety's Home Office Agent or Servicing Agent:

Name: _____

Title: _____

Address: _____

Telephone No.: _____

PERFORMANCE BOND

Surety Bond No._____

STATE OF TEXAS §

KNOW ALL MEN BY THESE PRESENTS:

COUNTY OF §

That we, _____, as Principal, and _____, as Surety, are hereby held and firmly bound unto the State of Texas as Obligee in the penal sum of _____ ($_____) for payment whereof the said Principal and Surety bind themselves, their heirs, executors, administrators, and successors, jointly and severally, firmly by these presents.

The conditions of this obligation are such that whereas the Principal entered into a certain contract, hereto attached, and made a part hereof, with the State of Texas, acting by and through the Board of Regents of The University of Texas System for and on behalf of _____, _____, dated _____, _____, for _____ (Project No. _____).

NOW THEREFORE, the condition of this obligation is such that, if the Principal shall faithfully perform the said Contract in accordance with the Plans and Specifications and Contract Documents, and shall fully indemnify and save harmless the State of Texas from all cost and damage which the State of Texas may suffer by reason of Principal's default or failure so to do and shall fully reimburse and repay the State of Texas all outlay and expense which the State of Texas may incur in making good any such default, then this obligation shall be null and void, otherwise it shall remain in full force and effect.

In the event that the Principal is declared in default under the said Contract, the Surety will within Fifteen (15) days of the State of Texas' declaration of such default take over and assume completion of said contract and become entitled to the payment of the balance of the Contract Price. Conditioned upon the Surety's faithful performance of its obligations, the liability of the Surety for the Principal's default shall not exceed the penalty of this bond.

The Surety agrees to pay to the State of Texas upon demand all loss and expense, including attorney's fees, incurred by the State of Texas by reason of or on account of any breach of this obligation by the Surety.

This bond is issued pursuant to the requirements of Section 2253.021, Texas Government Code, as amended.

Provided further, that if any legal action be filed upon this bond, venue shall lie in the county where the said Contract is to be performed.

Provided further, that the Surety, for value received, hereby stipulates and agrees that no change, extension of time, alteration or addition to the terms of the said Contract, or to the work to be performed thereunder, or the Specifications accompanying the same, shall in anywise affect its obligation on this bond, and it does hereby waive notice of any such change, extension of time, alteration or addition, to the terms of the said Contract or to the work or to the Specifications.

By signature hereon, if the amount of this bond exceeds $100,000, then the Surety attests that at the time the bond was executed (and Surety shall provide the Obligee with evidence of the following):

(1) it was a holder of a certificate of authority from the United States Secretary of the Treasury to qualify as a surety on obligations permitted or required under federal law; or

(2) had reinsured any liability in excess of $100,000 by a reinsurer holding a certificate of authority from the United States Secretary of the Treasury.

IN WITNESS WHEREOF, the above bounden parties have executed this instrument under their several seals this _____ day of _____ in the year _____, the name and corporate seal of each corporate party being hereto affixed, and these presents duly signed by its undersigned representative pursuant to authority of its governing body.

(SEAL) _____
Principal

ATTEST:

By: _____ By: _____

_____ _____
(Typed Name and Title) (Typed Name and Title)

(SEAL) _____
Surety

ATTEST:

By: _____ By: _____

_____ _____
(Typed Name and Title) (Typed Name and Title)

Surety's Texas Local Recording Agent or Resident Agent:

_____
(Signature)

_____
(Typed Name)

License No. _____

File No. _____

Address: _____

_____

Telephone No.: _____

Surety's Home Office Agent or Servicing Agent:

Name: _____

Title: _____

Address: _____

_____

Telephone No.: _____

EXHIBIT E

SECURITY BOND

SECURITY BOND

Surety Bond No._____

STATE OF TEXAS §

KNOW ALL MEN BY THESE PRESENTS:

COUNTY OF _____§

That we, _____, as Principal, and _____ _____, as Surety, are hereby held and firmly bound unto Owner and The Board of Regents of The University of Texas System as Obligees in the penal sum of Five Percent (5%) of_____ ($_____), the anticipated Guaranteed Maximum Price for the project defined herein below, for payment whereof the said Principal and Surety bind themselves, their heirs, executors, administrators, and successors, jointly and severally, firmly by these presents.

Whereas the Principal has executed a contract, with Obligee for the use and benefit of _____ _____, _____ _____, dated _____, _____ (the "Contract"), for _____ _____, Project No. _____, (the "Project").

NOW THEREFORE, the condition of this obligation is such that, if the aforesaid Principal shall execute a Guaranteed Maximum Price Proposal acceptable to all parties, the said Principal will, within the time required by the Contract, give Performance and Payment Bonds, as required by the Contract, to secure the performance of the terms and conditions of the Contract, then this obligation to be void; otherwise the Principal and surety will pay unto the Obligee the difference in money between the amount of the Guaranteed Maximum Price Proposal of the said Principal and the amount for which the Obligee legally contracts with another party to perform the work if the latter amount be in excess of the former, but in no event shall liability hereunder exceed the penal sum hereof.

IN WITNESS WHEREOF, the above bounden parties have executed this instrument under their several seals this _____ day of _____ in the year 20____, the name and corporate seal of each corporate party being hereto affixed, and these presents duly signed by its undersigned representative pursuant to authority of its governing body.

(SEAL) _____
Principal

ATTEST:

By: _____ By: _____

_____ _____
(Typed Name and Title) (Typed Name and Title)

(SEAL) _____
Surety

ATTEST:

By: _____ By: _____

_____ _____
(Typed Name and Title) (Typed Name and Title)

EXHIBIT F

CONSTRUCTION MANAGER'S PERSONNEL AND MONTHLY SALARY RATES

EXHIBIT F
CONSTRUCTION MANAGER'S PERSONNEL AND MONTHLY SALARY RATES

Owner's Project No. _____ Owner's Project Name: _____

The following Monthly Salary Rate (MSR) shall identify the estimated billable rate prior to execution of the Agreement, and shall be confirmed during the Guaranteed Maximum Price Proposal phase for use throughout Construction Phase Services on Owner Standard Schedule of Values Format for all salaried type personnel costs that are to be included as General Conditions Costs pursuant to the Agreement. The MSR shall include the employee's estimated monthly direct salary expense (including possible future salary increases), plus any employer payroll taxes and/or fringe benefit contributions as identified below. Any additional employer contributions not identified below shall be included in the Construction Phase Fee pursuant to Article 14 of the Agreement.

Employee		Estimated Employer's Monthly Contributions						Monthly Salary Rate
Name and Title	Estimated Monthly Direct Salary Expense	Federal & State Unemployment *(Approx. 1%)*	Social Security & Medicare *(7.65%)*	Worker's Compensation *($0 for ROCIP)*	Health & Insurance	Pension / 401(k)	Vacation / Holiday	
1.	$	$	$	$	$	$	$	$
2.	$	$	$	$	$	$	$	$
3.	$	$	$	$	$	$	$	$
4.	$	$	$	$	$	$	$	$
5.	$	$	$	$	$	$	$	$
6.	$	$	$	$	$	$	$	$
7.	$	$	$	$	$	$	$	$
8.	$	$	$	$	$	$	$	$
9.	$	$	$	$	$	$	$	$
10.	$	$	$	$	$	$	$	$

Construction Manager shall certify, to the best of his knowledge, that the above referenced salary information is accurate.

CM signature: _____ (same individual who signs agreement)

EXHIBIT G

CONSTRUCTABILITY IMPLEMENTATION PROGRAM

MD Anderson Agreement No. _____
MD Anderson Project No. _____

EXHIBIT G

CONSTRUCTABILITY IMPLEMENTATION PROGRAM

GENERAL SCOPE OF WORK

1.0 PROGRAM OBJECTIVES

- Implement a rigorous constructability program.
- Identify and document project cost and schedule savings (targeted costs are 5% of construction costs).
- Clarification of project goals, objectives.

2.0 PROGRAM IMPLEMENTATION

2.1 Project Constructability Team Meeting

- Identification of all project constructability team personnel and all project stakeholders.
- Team briefing of objectives, methods and concepts of constructability.
- Familiarization with implementation program.
- Preliminary identification of constructability priorities, special challenges, concerns and progress to date.

2.2 Constructability Implementation

- Review constructability program, implementation and documentation requirements.
- Establish constructability organization.
- Identify preliminary constructability priorities and special challenges or concerns.

2.3 Schematic Design Phase
(On-going tasks during Schematic Design Phase and for final review of Schematic Design Documents)

2.3.1 Construction Manager

- Lead project constructability team meetings, review documents, and develop constructability recommendations and documentation.
- Provide construction cost estimates to coincide with Project A/E's submissions. Project A/E and Constructability Consultant shall consult and resolve any differences in their respective construction cost estimates.

2.3.2 Project Constructability Team

- Review detailed issues of front-end, high-priority concepts and identify concerns, identify information needs, start to brainstorm alternative approaches, conduct preliminary evaluation of approaches, identify needs for further analysis, chart path forward.
- Review constructability recommendations, documentation and construction cost estimates for acceptance.

2.4 Design Development Phase
(On-going tasks during Design Development Phase and for final review of Design Development Documents)

2.4.1 Construction Manager

- Lead project constructability team meetings, review documents, and develop constructability recommendations and documentation.
- Provide Cost Quantity Surveys to coincide with Project A/E's submissions. Project A/E and Construction manager shall consult and resolve any differences in their respective Cost Quantity Surveys.
- Provide follow-up discussions on front-end, high priority concepts.

2.4.2 Project Constructability Team

- Review constructability recommendations, documentation and Cost Quantity Surveys for acceptance.

2.5 Construction Documents Phase
(On-going tasks during Construction Documents Phase and for final review of Construction Documents)

2.5.1 Construction Manager

- Lead project constructability team meetings, review documents, and develop constructability recommendations and documentation.
- Review plans and specifications developed to date, identifying sub-optimal or potentially problematic design elements.
- Recommend alternative design suggestions for consideration and document potential savings.
- Conduct value engineering investigations into selected high-cost design elements.
- Provide Cost Quantity Surveys to coincide with Project A/E's submissions. Project A/E and Construction Manager shall consult and resolve any differences in their respective Cost Quantity Surveys.

2.5.2 Project Constructability Team

- Review constructability recommendations, documentation and Cost Quantity Surveys for acceptance.

3.0 Close-out Documentation

3.1 Construction Manager

- Complete all documentation to summarize the accomplishments or the constructability effort.

3.2 Project Constructability Team

- Review documentation for acceptance.

EXHIBIT H

ADDITIONAL SERVICES PROPOSAL FORM

MD Anderson Agreement No. _____
MD Anderson Project No. _____

[TO BE SUBMITTED ON CONSTRUCTION MANAGER'S LETTERHEAD.]

Date:_____

Additional Pre-Construction Phase Services Proposal No._____

Name of Construction Manager's firm:

_____
_____
_____
_____
_____

Re: (Owner's Project Name)
(Owner's Project Number)
(Owner's Agreement No.)
(Owner's Purchase Order Number)

Refer to the Agreement dated _____, 20__ between The University of Texas MD Anderson Cancer Center ("Owner") and the undersigned ("Construction Manager") as amended to the date hereof (such agreement as so modified and amended being hereafter called the "Agreement") pursuant to which Construction Manager is to perform certain services. The terms which are defined in the Agreement shall have the same meanings when used in this proposal. The fee for these proposed Additional Pre-Construction Phase Services are in lieu of any other fee adjustment based on an increase to the CCL as related to these services.

1. Owner has requested the performance of the services described below which Construction Manager deems to be Additional Pre-Construction Phase Services. Refer to "Attachment A" for complete breakdown.

   (Detailed description of services. Use attachment only for additional description)

2. The services are fully described in the following documents: (list sheet #'s and spec sections)

3. Construction Manager agrees to perform the Additional Pre-Construction Phase Services described above subject to and in accordance with the terms and provisions of the Agreement

for a *lump sum price* which will be determined in accordance with the Agreement in an amount of: _____ Dollars ($_____),

OR

b.) an *hourly based on the hourly cost of Construction Manager's employees or consultants who actually perform the services* in accordance with the Agreement, not to exceed _____ Dollars ($_____),

and for reimbursement of expenses in accordance with the Agreement incurred solely in connection with the performance of such Additional Services, but which reimbursement for expenses will not exceed _____ Dollars ($_____).

4. Construction Manager will perform the services in accordance with any schedule attached hereto (attach schedule if applicable), but in any event not later than _____ (_____) days after Project A/E is authorized to proceed.

Submitted by:

[Construction Manager]

By:_____

Name:_____

Title:_____

Current Fee Summary

ORIGINAL ADDITIONAL PRE-CONSTRUCTION PHASE SERVICES FEE AMOUNT:	$ _____.___
Previously Approved Additional Pre-Construction Phase Services Fee Amounts:	$ _____.___
Other Pending Proposed Additional Pre-Construction Phase Services Fee Amounts:	$ _____.___
This Proposed Additional Pre-Construction Phase Services Fee Amount:	$ _____.___
PROPOSED TOTAL ADDITIONAL PRE-CONSTRUCTION PHASE SERVICES FEES:	$ _____.___
Current Pre-Construction Phase Services Fee Amount:	$ _____.___
Current Maximum Amount for Reimbursable Expenses:	$ _____.___
PROPOSED TOTAL PRE-CONSTRUCTION PHASE SERVICES FEES.	$ _____.___

Accepted this _____ day of _____, 20 _. Construction Manager is authorized to commence performance of the Additional Pre-Construction Phase Services on _____, 20 _.

OWNER'S AUTHORIZED REPRESENTATIVE

OWNER'S 2ND AUTHORIZED REPRESENTATIVE

MD Anderson Agreement No. _____
MD Anderson Project No. _____

By:_____

Name:_____

Title:_____

By:_____

Name:_____

Title:_____

EXHIBIT I

TEXAS SALES AND USE TAX EXEMPTION CERTIFICATION

EXHIBIT J

RIDER 104C – POLICY ON UTILIZATION OF HISTORICALLY UNDERUTILIZED BUSINESSES

EXHIBIT K

HUB SUBCONTRACTING PLAN FOR PRE-CONSTRUCTION PHASE SERVICES

EXHIBIT L

RIDER 105 – CONTRACTOR'S AFFIRMATIONS AND WARRANTIES

EXHIBIT M

RIDER 106 – PREMISES RULES

EXHIBIT N

RIDER 107 – TRAVEL POLICY

EXHIBIT O

RIDER 117 – INSTITUTIONAL POLICIES

EXHIBIT P

BUILDING INFORMATION MODELING (BIM) REQUIREMENTS

BUILDING INFORMATION MODELING REQUIREMENTS
FOR ARCHITECTS / ENGINEERS / CONSULTANTS / CONTRACTORS

PART 1 – GENERAL

1.1. RELATED DOCUMENTS

1.1.1. Attention is specifically directed, but not limited to, the Uniform General Conditions for University of Texas System Building Construction Contracts (UTUGCs) for other requirements related to the completion and submittal of Record Documents.

1.1.2. Attention is specifically directed to Owner's Design Guidelines Elements (ODGs) issued for the Project for other requirements related to the development, maintenance and exchange of design information, the formatting of design documents, and the completion and submittal of Record Documents. Particular attention should be directed to Owner's Design Guidelines Elements; Z10, Z2010 and its subsections and Z2035. Additionally, ODG Supplemental Resources; AutoCAD Standards; Equipment Matrix and Record Document Edit Log.

1.1.3. Attention is specifically directed to Owner's Master Construction Specifications for other requirements related to the development, maintenance and exchange of construction project information, and the completion and submittal of Record Documents. Particular attention should be directed to Division 01, General Requirements, specification sections 01 77 00, Project Closeout Procedures, and 01 78 39, Project Record Documents.

1.2. SUMMARY

1.2.1. This document establishes general and administrative requirements pertaining to Building Information Modeling (BIM) to meet Facilities Information Management (FIM) expectations for projects of various sizes and delivered under various contracting methodologies.

1.2.2. BIM practices require collaboration and involvement of all parties throughout the project delivery process, regardless of the delivery method being used for a given project. For BIM practices to be successful, collaboration must begin at the onset of the project development and continue throughout the Project until Owner accepts all final record document requirements.

1.2.2.1. To accomplish this required collaboration and successfully deliver the Project to Owner, it is mandatory that a BIM Execution Plan be generated with involvement of all Project stakeholders. Owner recognizes that the industry standard for a BEP has been developed by the building SMART alliance™ (bSa) Project "BIM Project Execution Planning" and is incorporated by the National Institute of BUILDING SCIENCES as part of its National BIM Standard – United States Version 3. Owner recommends this as a template when generating the BIM Execution Plan for the Project.

1.2.3. BIM practices encompass and coordinate traditionally separate functions of design (Architect/Engineer) and construction (Contractor) in order to assemble all related building information into the Equipment Matrix for building operation assets or the Project Information Matrix for all other required information. These documents will provide the information required to efficiently operate and maintain the facility once Substantial Completion has been achieved and the Project has been turned over to Owner.

1.2.4. It is of primary concern that all building modeling and facility information developed during the design and construction of the Project be timely and efficiently developed, maintained and exchanged from initiation of the Project through Final Completion in accordance with all Contract Documents and with Owner's operational and maintenance needs. A/E shall develop a BIM Execution Plan (BEP) that details how, throughout the Project lifecycle, A/E, in collaboration with Contractor expects to systematically demonstrate to Owner that all building and system information is current to the extent that it can be at the time during the design and construction process. For a Design/Build delivery method, the BEP shall be developed jointly between A/E and the Design/Build Contractor, coordinating with Owner.

1.2.5. It shall be the responsibility of A/E, and each of its consultants, and Contractor and each of its

Subcontractors, to have or obtain, at their cost, the trained personnel, hardware, and software necessary to successfully fulfill their respective obligations as set forth in the mutually developed BIM Execution Plan.

1.3. DEFINITIONS

Capitalized terms used in this document shall have the meanings as set forth in the applicable contract(s), the UTUGCs, or any combination thereof, unless otherwise defined or modified below. For projects implemented with the construction manager-at-risk delivery method, the term Contractor shall mean Construction Manager. For projects implemented with the design-build delivery method, the term Contractor shall mean Design/Build Contractor. To be consistent with the UTUGCs, A/E is used in lieu of, and as a synonym for, the terms Project Architect, Project Architect/Engineer, and Project A/E that may appear in some standard UT System construction manager-at-risk, design-build, and some design services agreements.

1.3.1. Final Model –The model(s) from the Contract Documents that has (have) been professionally electronically generated by A/E reflecting the as-constructed conditions of the Work based upon the information provided by Contractor as reflected in the Record Documents and Contractor's construction model.

1.3.2. BIM Execution Plan (BEP) – A document developed by A/E's BIM Team, in collaboration with Owner, concurrent with the start of the Project, that prescribes in detail how Building Information Modeling will be implemented for the Project and how requisite information will be transferred into the Equipment Matrix and the Project Information Matrix prior to Substantial Completion of the Project. For a design-build project, Contractor will be involved in the creation of the initial BEP with A/E. Reference section 1.2.2.1 for recommendations on the BEP development.

1.3.3. BIM Level – The extent to which model and information development will be required on a specific project. The BIM Level initially will be determined by Owner but may be adjusted, with Owner's express approval, by the BIM Team over the course of the Project. The BIM Level will depend upon several factors, including the scope of project, project schedule; project cost; availability of existing BIM models; and availability of existing BIM data, etc. Reference sections 1.3.16 through 1.3.18 for Owner's definition of project levels.

1.3.3.1. A/E team must provide to Contractor a level of Model that is dimensionally accurate, detailed and contains all required data to be sufficient for Contractor to accurately create and maintain its construction model throughout the construction and project close out processes. Owner is not dictating the means and methods of coordination between A/E and Contractor. However, A/E shall be required to coordinate with Contractor to provide clarifications and additional modeling elements should the initial Design model prove to be insufficient. This shall be detailed, as well as Owner's interactions in the process, in the BEP created at the beginning of the Project and modified as needed throughout.

1.3.4. Building Automation System (BAS) – The distributed control system used by Owner to monitor and control infrastructure systems within its facilities.

1.3.5. Building Information Modeling (BIM) – The process of generating and managing building data and geometry using three-dimensional (3-D), real-time, dynamic building modeling software resulting in a Building Model and corresponding information.

1.3.6. Building Information Modeling Team (BIM Team): Working group made up of representative(s) from A/E, A/E's consultants, Contractor, Subcontractors and Owner. A/E will provide ad hoc representation of A/E's consultants on the BIM Team as required for the implementation of the BIM Execution Plan. Contractor will provide ad hoc representation of Subcontractors on the BIM Team as required for implementation of the BIM Execution Plan.

1.3.7. Building Model – A 3-D digital representation of physical and functional characteristics of a facility, or the components or systems thereof that encompass building geometry, spatial relationships and quantities and properties of building components and systems.

1.3.8. Computerized Maintenance Management System (CMMS) – The computer software package that Owner uses to manage a digital database of information related to its facilities equipment and systems for the purpose of optimizing its maintenance operations.

1.3.9. CMMS Integration Process (CIP) – The prescribed process by which the information generated during Building Information Modeling will be fully integrated into Owner's CMMS. The CIP is to be developed by the BIM Team and is to be included in the BIM Execution Plan.

1.3.10. Construction Documents – Defined in the UTUGC unless otherwise defined herein. The Construction Documents shall also include the Building Models, the Equipment Matrix and the Project Information Matrix as well as all other documents required within the Specifications, Owners Design Guidelines and the BIM Requirements.

1.3.11. Construction Model – A 3-D digital representation of physical and functional characteristics of a facility, or the components or systems thereof, that encompasses building geometry, spatial relationships and quantities and properties of building components and systems and that is developed by Contractor and the Subcontractors before or during the Construction Phase of the Project. Unless Owner specifically agrees otherwise, the Construction Model shall represent a spatially accurate, as-built condition. Components of the building shall be modeled, and their corresponding data shall be built into the model as detailed in the project BIM Execution Plan. This includes Tier 1 & Tier 2 items as described in sections 1.3.12 and 2.2. Reference section 2.5.1.1.6.

1.3.11.1 Coordination model(s) – Typically a derivation of the Construction Model in either a Navisworks or BIM 360 Glue format used by Contractor and Subcontractors to coordinate the objects and systems to be installed during the course of construction.

1.3.12. Depth of Detail – A measure of the amount of information to be provided for each element within the Building Model. The Building Model and Contract Documents shall be developed so as provide information that aligns with the following tiers:

1.3.12.1.1. Tier 1 Data – Information that Owner maintains about its facilities, or any components thereof, that shall reside within Owner's CMMS and is to be maintained throughout the Project in the Equipment Matrix

1.3.12.1.2. Tier 2 Data – Information Owner maintains about its facilities, or any component(s) thereof, that does not reside in Owner's CMMS. This data may or may not physically reside within a model, a table, schedule, list, external spreadsheet/database, submittal, RFI, ASI, drawings or specifications etc. that pertain to final completion of the Project. This includes but is not limited to the following:

1.3.12.2.1 Fixed equipment data gathered during the course of design and construction (e.g. manufacturer's information, including maintenance, related to sinks, faucets, emergency showers, light fixtures, life safety items, etc.).

1.3.12.2.2 Fixed architectural and finish features (e.g. manufacturers maintenance information related to doors, hardware, finishes, glazing, etc.).

1.3.12.3. Tier 1 and Tier 2 Data elements within the Equipment Matrix and PIM must reference to a specific individual, physical space utilizing the appropriate room numbering designation. Reference section 2.2 of this document.

1.3.13. Design Model – A 3-D digital representation of physical and functional characteristics of a facility, or the components or systems thereof, that encompasses building geometry, spatial relationships and quantities and properties of building components and systems and that are developed during the design phase of the Project as detailed in the project BEP. Reference sections 1.3.3.1 and 2.5.1.1.5.

1.3.14. Facilities Information Management (FIM) – The process of gathering, maintaining and distributing data associated with Owner's facilities for the purposes of operating, maintaining and renovating those facilities.

1.3.15. Level of Development – The degree to which information included within the Building Model can be relied upon to be current and accurate

1.3.16. Major Capital Project – Any project that involves the construction of a new facility and that has a total project cost of $10 million or more (Major Capital – New Construction), or any project that involves the renovation (repair and rehabilitation) of an existing facility and that has a total project cost of $10 million or more (Major Capital – Renovation). Major Capital Projects may involve the rehabilitation or

upgrading of mechanical, electrical, plumbing, infrastructure technology components or systems or any combination thereof.

1.3.17. Minor Capital Project – Any project that involves the construction of a new facility and that has a total project cost of $100,000 or more but less than $10 million (Minor Capital – New Construction), or any project that involves the renovation (repair and rehabilitation) of an existing facility and that has a total project cost of $100,000 or more but less than $10 million (Minor Capital – Renovation). Minor Capital Projects may involve the rehabilitation or upgrading of mechanical, electrical, plumbing, infrastructure technology components or systems or any combination thereof.

1.3.18. Operations Project – Any project that involves new construction work or the renovation (repair and rehabilitation) of an existing facility and that has a total project cost that is less than $100,000. Operations Projects may involve the rehabilitation or upgrading of mechanical, electrical, plumbing, infrastructure technology components or systems or any combination thereof.

1.3.19. Project Information Matrix (PIM) – The electronic file for a spreadsheet or database that identifies the information required from the Building Model, Drawings, and any other data source(s) developed for the Project and the parameters and properties of the content. Generally, Owner initially will provide the PIM at the beginning of the Project. During the design phase, A/E will expand and populate the PIM as information becomes available. Throughout the construction phase, Contractor and A/E will update the PIM and will issue scheduled renditions during construction in addition to the final PIM to Owner at Substantial Completion of the Project. Special attention should be given to section 1.3.12.1.2 of this document for specific requirements concerning the information to be collected in the PIM.

1.3.20 Project Information Core Team (PICT) – A working group comprised of Owner personnel from various departments within the Division of Operations and Facilities Management who are facilities system Subject Matter Experts (SME's). The PICT will monitor information delivery requirements for project information governance and the application of BIM requirements on projects for design, construction, construction support, professional and non-professional services. A representative of the PICT will be part of the project team and will report to the PICT on the status of the project information throughout the lifecycle of the Project.

1.3.21. Record Documents – Defined in the UTUGCs and Owner's Master Construction Specification Section 01 78 39, Project Record Documents, unless otherwise defined herein. Record Documents shall also include all BIM deliverables as detailed in this document; reference section 2.5 for additional detail.

1.3.22. System – A group or collection of items or equipment that work together or in tandem to function as a whole. Examples of systems include but are not limited to: HVAC systems, bulk gas systems (any gases or vacuum not supplied by a point-of-service device), plumbing, fire-rated assemblies such as doors/frames, glazing, etc. or any items that are commonly known as systems by the design and construction industries. If uncertainty exists, A/E and Contractor are to coordinate with Owner for clarification.

1.3.23. Test, Adjust, and Balance (TAB) Firm: Owner may engage a Test, Adjust, and Balance Firm for the Project under a Separate Contract. When engaged for the Project, the TAB Firm shall be a part of the BIM Team and shall provide services as set forth in the Specifications and its Separate Contract.

1.4. COORDINATION

1.4.1. BIM Team

1.4.1.1. Owner's Members

1.4.1.1.1. Representatives assigned by Owner's Designated Representative, including but not limited to, the Owner's Project Manager, BIM Manager, PICT member and other SMEs, as required.

1.4.1.1.2. TAB Firm, when engaged for the Project.

1.4.1.1.3. Commissioning Agent, when engaged for the Project.

1.4.1.2. Architect / Engineer Members

1.4.1.2.1. A/E, including A/E and its subconsultant BIM manager(s), except for projects implemented with design-build methodology. Team members for design-build projects shall include Contractor's BIM Team members, as well, with each party's responsibilities detailed in the joint BEP.

1.4.1.3. Contractor's Members

1.4.1.3.1. Individuals, each having authority to act on behalf of the entity it represents, explicitly organized to implement all BIM activities through coordinated actions.

1.4.1.3.2. Representatives of Contractor, including but not limited to

- Contractor's project manager,
- Contractor's BIM Manager/Coordinator
- A/E, including A/E subconsultant BIM manager(s), (for projects implemented with design-build methodology)
- Subcontractors, as needed for Contractor to fulfill its BIM obligations, and
- Equipment suppliers, as needed for Contractor to fulfill its BIM obligations.

1.4.2. Scheduling

1.4.2.1. Design (Preconstruction) Phase

1.4.2.1.1. For projects implemented using the traditional or the construction manager-at-risk contracting methodology, A/E shall integrate all BIM activities into its BEP, Project Work Plan and the design schedule.

1.4.2.1.2. For projects implemented using the design-build methodology or the design assist methodology, A/E and Contractor together shall integrate all BIM activities into the BEP, Baseline Schedule and the Work Progress Schedule and shall ensure that BIM requirements are clearly set forth in all solicitation documents used to select subcontractors or suppliers for the Project. All parties will address scheduling problems and make necessary notifications in a timely manner to expedite all BIM activities.

1.4.2.2. Construction Phase

1.4.2.2.1. At time of contractor selection, A/E shall provide to Contractor A/E's up-to-date BEP for utilization in creating the comprehensive Project BEP unless the delivery method is design-build, in which case the Project BEP is developed jointly with A/E and Contractor.

1.4.2.2.2. Contractor shall integrate all BIM activities into the BEP, Baseline Schedule and the Work Progress Schedule. A/E, Contractor and all other stakeholders will address scheduling problems and make necessary notifications in a timely manner to expedite all BIM activities.

1.4.2.2.3. Contractor shall provide its initial BEP and schedule of primary BIM activities at the project kick-off meeting. For design-build delivery, prior to the start of Schematic Design, Contractor shall have incorporated and integrated the BEP and all BIM activities into the Baseline Schedule and Work Progress Schedule with appropriately linked predecessors and successors.

1.4.2.2.4. A/E shall receive periodic as-built information from Contractor as detailed in the BEP and make all changes necessary to maintain an up-to-date, accurate as-built model throughout the construction phase of the Project to ensure that a complete as-built model and set of Construction Documents are available to Owner at time of Substantial Completion.

1.5. ROLES AND RESPONSIBILITIES

1.5.1. Roles and responsibilities of BIM Team members are set forth below to help to clarify Owner's expectations with respect to the BIM and FIM processes.

1.5.2. Owner's Role and Responsibilities:

1.5.2.1. Provide specifications related to the format and content for the Project Information Matrix. These specifications are to include the identification of Tier 2 Data required for the Project where available.

1.5.2.2. Provide specifications related to the format and content for the Equipment Matrix.

1.5.2.3. Provide initial direction as to the extent the BIM is to be used on the Project, including the BIM Level to be used on the Project.

1.5.2.4. Approve the BIM Execution Plan and A/E's and Contractor's schedules for completing all BIM activities.

1.5.2.5. Participate in BIM Team meetings.

1.5.2.6. Review and validate adequacy of Building Model development and project data collection and delivery.

1.5.3. A/E's Role and Responsibilities:

1.5.3.1. Initiate the BIM collaboration proceedings with Owner at time of project award. Contact Owner's Project Manager to establish the BIM Coordination Kick-Off meeting with all stakeholders, including the Owner's BIM and PICT representative(s).

1.5.3.2. Attend BIM Team meetings.

1.5.3.3. Incorporate all BIM activities into the BEP, design Work Plan and the design phase schedule.

1.5.3.4. Produce for Owner's approval, the initial BEP, prior to or concurrently with the start of the project design, the initial Project Information Matrix and Equipment Matrix of all devices, systems and equipment supplied. It is intended that the initial BEP be coordinated with and contain Owners BIM requirements including the BIM Deliverables. Reference section 2.5 – BIM Deliverables.

1.5.3.4.1. A/E BEP shall also include anticipated interactions with Contractor, Subcontractors and other stakeholders throughout the project lifecycle.

1.5.3.4.2. If the delivery method is design-build, A/E shall work with Contractor to produce a single project BEP incorporating the entire Project from project inception to Final Completion.

1.5.3.5. Collaborate with Contractor and approve edits to the BEP, and the PIM.

1.5.4. Contractor's Role and Responsibilities:

1.5.4.1. Receive from A/E and assume lead responsibility for the BEP, Building Model, PIM and Equipment Matrix. If the project delivery method is design-build, Contractor shall work with A/E to produce a single project BEP incorporating the entire project from project inception to Final Completion.

1.5.4.2. Administer updates to the BEP, the Building Model, the PIM and the Equipment Matrix with the intent that all BIM-FIM Team members will have up-to-date information as the Project progresses, this includes A/E..

1.5.4.3. It is intended that Contractor will revise and refine the BEP with their responsibilities and requirements prior to the start of construction and coordinate the revised BEP with Owner and A/E by requesting a BIM Kick-Off meeting. If no BEP was supplied by A/E, it is intended that Contractor will create a Project BEP that incorporates Owners BIM requirements including the BIM Deliverables. Reference section 2.5 – BIM Deliverables.

1.5.4.4. Provide an individual, experienced in Building Information Modeling to document changes to the Building Model and complete the implementation of the BEP. Contractor shall assign this individual to act as the BIM Coordinator, who may have additional duties such as MEP Coordinator, but shall not be Contractor's project manager or superintendent. Contractor shall submit qualifications demonstrating the BIM Coordinator's technical expertise and

experience to Owner for approval. In the event that Contractor chooses to subcontract its BIM obligations, Contractor must submit the name and qualifications of the proposed subcontractor for Owner's approval.

1.5.4.5. Ensure that Building Modeling activities are incorporated into the BEP, Baseline Schedule and the Work Progress Schedule.

1.5.4.6. Schedule and conduct periodic meetings with Subcontractors and equipment suppliers related to BIM to ensure the Construction Model, Equipment Matrix and the Project Information Matrix are being routinely and accurately updated.

1.5.4.7. Transmit to A/E all as-built project information as it becomes available and as defined in the BEP throughout construction.

PART 2- EXECUTION

2.1 BIM EXECUTION PLAN

2.1.1 Throughout its development, efforts shall be made to align the responsibilities set forth in the BEP with the skills customarily contributed by each party associated with the Project. The BEP shall be considered as a "living document" that is to be updated and refined throughout the life of the Project and shall be available for review and verification by Owner at any time.

2.1.2 To the extent practical, the BEP shall minimize redundant efforts in favor of a single, organized approach to all activities required to successfully complete the BIM - FIM process.

2.1.3 The BEP shall include all pertinent Project Information. Reference section 1.2.2.1 for recommendations on the BEP development and organization. It shall also identify and specify;

2.1.3.1. the extent to which Building Model(s) are to be used on the Project.

2.1.3.2. the expected timeline for when information will become available for the Equipment Matrix and Project Information Matrix.

2.1.3.3. the information workflow process, which is to include identifying from where the information to be included in the Equipment Matrix and PIM will originate, the requirements for transferring information from and to each model and into the Equipment Matrix and PIM, the Depth of Detail and the party responsible for authoring and supplying the information at the appropriate time.

2.1.3.4. A project BIM Responsibility Matrix detailing what parties are responsible for the numerous aspects of the BIM process and their products. Reference Owners sample BIM Responsibility Matrix, Attachment "A", for baseline.

2.1.3.5. the version of the Autodesk Building Design Ultimate software suite into to which the project documents will be transferred.

2.1.3.6. the file structure for the Building Model.

2.1.3.7. all model types, names, content and relationships.

2.1.3.8. the Level of Development for each element to be included within the Building Model at each stage of the Building Model development.

2.1.3.9. the Depth of Detail for each element to be included within the Building Model.

2.1.3.10. the drawings to be generated from the Building Model(s) and the process(es) to be used for generating two-dimensional drawings from the Building Model(s) to ensure that all generated drawings adhere to Owner's CAD Standards, drawing structure, content, data elements and delivery as defined in the ODGs.

2.1.3.11. the CMMS Integration Process to be used on the Project, including the requisite process for receiving Owner's CMMS Asset Numbers and for incorporating those numbers into the design documents and the PIM.

2.1.3.12. the data transfer protocol.

2.1.3.13. conventions to be used for naming files.

2.1.3.14. measures to be taken to ensure that there is no significant loss of drawing entities or data during drawing generation and data extraction.

2.1.3.15. areas in which laser scanning is to be conducted.

2.1.3.16. locations and folder/file structures where all working files will be located during the lifecycle of the Project that will be accessible by all members of the BIM Team, including Owner. Coordination between A/E, Contractor and Owner of the location, folders and files to be detailed prior to project design to ensure a seamless transfer of data and models throughout the Project life cycle and for BIM Deliverables. This must include a method for transfer to Owners control at the end of Project that does not require file re-pathing or the breaking of any links within the models and documents.

2.1.3.17. Agreed upon version of all software that will be utilized to create the models, drawings, etc. This may include, but not be limited to the following: AutoDESK REVIT, AutoDESK AutoCAD MEP, Navisworks and BIM 360.

2.1.4 Development of the BEP shall be included as an agenda item for all Project Team meetings throughout the Preconstruction (Design) Phase of the Project. When and as appropriate, and as agreed upon by Owner, the discussion items shall include, as a minimum;

2.1.4.1. the status of the development of the BEP,

2.1.4.2. the identification of any issues related to the timing for exchanging information between the various Building Models and the timing and the means and methods for entering information into the Project Information Matrix,

2.1.4.3. the Level of Development of each of the Building Models,

2.1.4.4. the Depth of Detail for information within the Building Models and to be entered into the Project Information Matrix.

2.1.5 Refinement and implementation of the BEP shall be included as an agenda item for all Project Team meetings throughout the Construction Phase of the Project. When and as appropriate, the discussion items shall include, as a minimum;

2.1.5.1. the status of the refinement of, and any updates to, the BEP,

2.1.5.2. the identification of any issues related to the timing for exchanging information between the various Building Models and the timing and the means and methods for entering information into the Project Information Matrix and the Equipment Matrix, and the impact on the delivery schedule of information as defined in the BEP.

2.1.5.3. the Level of Development of each of the Building Models,

2.1.5.4. the Depth of Detail for information contained within the Building Models and for information to be entered into the Project Information Matrix and the Equipment Matrix.

2.1.5.5. the status of the development and implementation of the CMMS Integration Process.

2.2 EXTRACTED DATA

2.2.1 Unless Owner specifically agrees otherwise, all data input into the model(s) or Contract Documents, shall be extracted from its various sources and delivered in either the Equipment Matrix or the Project Information Matrix. All Equipment, systems, finishes, etc. installed within the course of the Project that were not identified in the initial Owner-provided Equipment Matrix or PIM are required to be included. Data elements within the Equipment Matrix and PIM, must reference to a specific, individual, physical space utilizing the appropriate room numbering designation.

2.2.1.1 Reference section 1.3.12 – Depth of Detail, for explanation of Data types and requirements.

2.3 DOCUMENT INDEX

2.3.1 An index shall be included with each document delivery. The document index shall be in the form of a Microsoft Excel spreadsheet and shall identify every file included in the delivery. Identification information shall include;

2.3.1.1 Owner's project number.

2.3.1.2 Owner's project name.

2.3.1.3 File name.

2.3.1.4 File description.

2.3.1.5 Identity of the file authoring entity (i.e. who generated the file A/E, consultant, Contractor, Subcontractor).

2.3.1.6 Cross references to any required support files.

2.4 LASER SCANS

2.4.1 Unless Owner specifically directs or agrees otherwise, Contractor shall provide laser scans for the following types of spaces:

2.4.1.1 Operating rooms.

2.4.1.2 Intensive care units.

2.4.1.3 Imaging suites.

2.4.1.4 Mechanical equipment rooms.

2.4.1.5 Plenum, above ceiling spaces and walls through which significant mechanical, electrical, plumbing and/or information technology distribution systems are routed. When in doubt about whether a space or area requires scanning, contact the Owner's project manager and Owner's BIM manager for direction.

2.4.1.6 Spaces and areas located above hard finished ceilings.

2.4.1.7 Laser scans generated by any project team member including, but not limited to, A/E, its consultants, Contractor or its Subcontractors, throughout the life span of the Project not specifically detailed above.

2.4.2 Laser scans shall be completed for all identified areas, including ceilings, walls and plenums before final cover-up begins.

2.4.3 Laser scan deliverables shall be in the form of three-dimensional models or two- dimensional drawings as set forth below in the BIM-FIM Deliverables section of this document and the final point cloud file generated by the laser scan used to create the models or drawings.

2.4.3.1 Documentation of what scanning hardware and software was used shall be part of the Laser Scan deliverables.

2.5 BIM-FIM DELIVERABLES

2.5.1 The BIM-FIM deliverables shall be set forth in the BIM Execution Plan and are based upon the Project requirements. All files delivered in portable document file (pdf) format shall be searchable (i.e. "smart" or "vector" pdf's). Unless Owner expressly agrees otherwise, the deliverables for each project type shall be as follows:

2.5.1.1 Project Deliverables

2.5.1.1.1 BIM Execution Plan

2.5.1.1.2 Project Information Matrix

2.5.1.1.3 Equipment Matrix

2.5.1.1.4 Final Model(s) – in the version of Autodesk REVIT agreed upon in the BEP. The Final Model may be either the Design Model, the Construction Model or a

combination of elements and information from both depending on the contract language and method of project delivery. Federated REVIT Models shall be pathed and configured in such a manner that they are usable without significant re-pathing. Reference section 1.3.1.

2.5.1.1.4.a All BIM Team members (A/E, consultant(s), Contractor and Subcontractor(s)) shall utilize REVIT to generate all as-constructed final models.

2.5.1.1.4.b The "Final Model" shall be generated by A/E and shall be continuously updated throughout construction of the Project with all significant changes. A change shall be considered significant if the 3-D geometry related to structure, partitions walls, doors, windows, or ceilings change.

2.5.1.1.4.c Tier I and Tier II construction and data elements shall be incorporated within the model structure to the extent specified in the BEP, section 2.1.4.4 – Depth of Detail, from which Contractor shall extract the data and place it into either the Equipment Matrix or Project Information Matrix.

2.5.1.1.4.d A/E and Contractor shall maximize the use of REVIT Spaces and Zones within the models. Each item that is placed within the model will be linked to a room number, space and/or zone.

2.5.1.1.4.e All mechanical, electrical, plumbing, security, telecommunications and all other items or equipment that are part of a System will be linked to both the space it is located within and the zone (groups of spaces and/or zones) that are served by said items or equipment.

2.5.1.1.3.d.1 Systems and their related zones and spaces shall be scheduled within their respective models.

2.5.1.1.4.f To the extent identified in the BEP, physical items that are documented in a table, schedule, list, external spreadsheet/database, submittal, RFI, ASI, etc. that pertain to final completion of the Project will be represented within the model as a 3-D object with inherent parameters or as part of a property set, etc.

2.5.1.1.5 Design Model(s) – in the version of Autodesk REVIT agreed upon in the BEP. Reference section 1.3.13. Federated REVIT Models shall be pathed and configured in such a manner that they are usable without significant re-pathing. If the final design model is federated, ensure all models properly supplied and linked to the central model utilizing a generic path.

2.5.1.1.6 Construction Model(s) – in the version of Autodesk REVIT agreed upon in the BEP. Reference section 1.3.11. Federated REVIT Models shall be pathed and configured in such a manner that they are usable without significant re-pathing. If the final construction model is federated, ensure all models are properly supplied and linked to the central model utilizing a generic path.

2.5.1.1.7 Coordination Model(s) - in the version of Autodesk Navisworks or GLUE as agreed upon in the BEP. Reference section 1.3.11.1. Final Coordination Models will have all Tier 1 data (CMMS equipment) submittals, operational data, etc., hyperlinked within the model to the appropriate information in a manner that will not result in non-functioning hyperlinks when the model is turned over Owner.

2.5.1.1.8 Extracted Data - Equipment Matrix containing Tier 1 data and the Project Information Matrix containing Tier 2 data as defined in sections 1.3.12 and 2.2

2.5.1.1.9 Laser Scans - Laser Scans shall be delivered in 3-D REVIT models as well as the final Point Cloud file from which the model(s) were generated. Searchable PDF floor plans with scan locations identified and hyperlinked to each scan. PDF's shall be created in a manner hyperlinked that will not result in non-functioning hyperlinks

when the model is turned over to Owner. Reference section 2.4 for additional requirements.

2.5.1.1.10 Final Documents as specified in Owner's Master Construction Specification 01 78 39.

2.5.1.1.11 Media Type and format - All models, drawings, submittals, RFI's, Spreadsheets, databases, and any other deliverable shall be provided to Owner through Owner's Project Management Information System (Owner's PMIS), unless otherwise agreed upon by Owner prior to the start of design or construction.

2.5.1.1.11.a If any project model file(s) exceed the allowable size limit for upload into the Owner's PMIS, all model file(s) shall be delivered on a Windows 7 compatible USB 2.0 "Plug and Play" device, unless otherwise agreed upon by Owner prior to the start of design or construction.

2.5.1.1.11.b All appropriate relationships, links, hyperlinks and all other required connections between models, data and documentation must be maintained or updated so that the information on the USB device or agreed upon alternative is complete, accessible and usable by Owner upon delivery.

Balance of page intentionally left blank.

ATTACHMENT "A" (1 of 3 pages)

R	RESPONSIBLE
C	CONSULTED
A	ACCOUNTABLE
I	INFORMED

BIM RESPONSIBILITY MATRIX

	REQUIRED	MDA	BIM Team	Arch	Struct	Civil	Eng. (MEP)	GC	MEPFP	CxA
BIM Execution Plan (BEP)	YES									
BIM Manager	YES	C	R	A	I	I	I	A	I	C
Owner	YES	C	R	C	I	I	I	C	I	C
Commissioning Agent (CxA)	YES	C	R	C	I	I	I	C	C	A
Architect	YES	C	R	A	I	I	I	I	I	I
Structural	YES	C	I	A	R	C	C	I	I	I
Civil	YES	C	I	A	C	R	C	I	I	I
Mechanical	YES	C	I	A	C	C	R	I	I	I
Electrical	YES	C	I	A	C	C	R	I	I	I
General Contractor	YES	C	R	I	I	I	I	A	C	I
MEPFP Trades	UNKNOWN	I	I	I	I	I	I	A	R	I
Design Authoring	YES									
Schematic Design	YES	I	I	A,R	R	R	R	C	C	I
Design Development	YES	I	I	A,R	R	R	R	C	C	I
Construction Documents	YES	I	I	A,R	R	R	R	C	C	I
Architectural	YES	I	I	A,R	C	C	C	C	C	I
Structural	YES	I	I	A	R	C	C	C	C	I
MEP	YES	I	I	A	C	C	R	C	C	I
Civil	YES	I	I	A	C	R	C	C	C	I
Existing Conditions	YES	C	C	A	C	C	C	R	R	I
3D Site Modeling	YES	I	I	A	C	C	C	R	C	I
3D Coordination	YES	I	I	A	C	C	C	R	C	I
4D Scheduling	UNKNOWN	I	C	C	I	I	I	A	R	I
5D Quantity Verification	UNKNOWN	I	R	C	C	C	C	A	R	I
Facility Maintenance Modeling	YES	C	A	R	C	C	C	R	C	I
Model Analysis	UNKNOWN	C	C	A	C	C	C	C	C	C
Energy Analysis	YES	C	C	A	I	I	R	C	C	C
Lighting Analysis	UNKNOWN	C	C	A	I	I	R	C	C	I
Mechanical Analysis	UNKNOWN	C	C	A	I	I	C	C	C	C
Structural Analysis	UNKNOWN	C	C	A	R	I	I	I	I	I
Code Verification Analysis	UNKNOWN	C	C	A	C	C	C	C	C	C
3D Pre-Fabrication Mockups	UNKNOWN	I	C	C	C	I	C	A	R	I
5D Cost Estimating	UNKNOWN	I	R	C	C	C	C	A	R	I

ATTACHMENT "A" (2 of 3 pages)

R	RESPONSIBLE
C	CONSULTED
A	ACCOUNTABLE
I	INFORMED

	REQUIRED	MDA	BIM Team	Arch	Struct	Civil	Eng. (MEP)	GC	MEPFP	CxA
Revit Modeling Protocols		I	C	A	R	R	R	R	C	I
Civil	YES	I	C	A	I	R	I	R	C	I
Rooms	YES	I	C	A	I	I	I	R	C	I
Walls	YES	I	C	A	I	I	I	R	C	I
Doors	YES	I	C	A	I	I	I	R	C	I
Closure and Adjacency	YES	I	C	A	I	I	I	C	C	I
MEPFP Models	YES	I	C	A	I	I	C	R	C	I
Duplication Verification	YES	I	C	A	C	C	C	R	C	I
Parametric Verification	YES	I	C	A	C	C	C	R	C	I
MDA nomenclature Verification	YES	I	C	A	I	I	I	R	I	I
Object definition Verification	YES	I	C	A	R	R	R	R	C	I
Revit Warnings	YES	I	R	A	C	C	C	R	C	I
Model Origin	YES	I	C	A	I	C	I	C	I	I
Z-Dimension Accuracy	YES	I	C	A	I	C	I	C	I	I
Model Definition and Progression Specification (MDPS)										
Uniformat Classifications	YES	I	C	A	C	C	C	R	C	I
LOD Definitions	YES	I	C	A	I	I	I	C	I	I
Completeness of Models	YES	C	A	R	C	C	C	R	C	C
Model Property and Parameter Data	YES	C	R	A	C	C	C	R	C	C
Revit Model Matrix	YES	C	A	R	C	C	C	R	C	C
Tracking Model Revisions from CD Forward	YES	I	A	R	C	C	C	R	C	I
2D Supplemental Drawings during CA	YES	C	R	A	C	C	C	C	I	I
Model QA/QC	YES	I	A	R	C	C	C	R	C	I
BIM Coordination										
Early Design Stage	YES	I	R	A	C	C	C	I	I	I
Design Coordination	YES	I	R	A	C	C	C	C	I	I
Spatial Analysis	YES	I	R	A	I	I	I	I	I	I
Clash Resolution	YES	I	R	A	R	R	R	C	C	I
Design Coordination Collaboration	YES	I	R	A	C	C	C	C	C	I
General Contractor Design Model Acceptance	YES	I	R	R	C	C	C	A	R	I
ConStruction Coordination	YES	I	R	R	C	C	C	A	R	I
Coordination-enabled Pre-Fabrication	YES	I	R	C	I	I	I	A	R	I
CMMS Management										
Administration	YES	R	A	C	I	I	I	C	I	C
Validation	YES	C	A	R	I	I	I	R	I	I

ATTACHMENT "A" (3 of 3 pages)

R	RESPONSIBLE
C	CONSULTED
A	ACCOUNTABLE
I	INFORMED

	REQUIRED	MDA	BIM Team	Arch	Struct	Civil	Eng. (MEP)	GC	MEPFP	CxA
BIM Information Managers (IM)										
BIM Manager/Owner IM	YES	C	A	C	I	I	I	C	I	C
Architect IM	YES	I	C	A	I	I	I	I	I	I
Structural IM	YES	I	C	A	R	I	I	I	I	I
Civil IM	YES	I	C	A	I	R	I	I	I	I
Mechanical IM	YES	I	C	A	I	I	R	I	I	I
Electrical IM	YES	I	C	A	I	I	R	I	I	I
General Contractor	YES	I	C	I	I	I	I	A	I	I
MEPFP Trades IM	UNKNOWN	I	C	I	I	I	I	A	R	I
CxA IM	YES	C	C	C	I	I	I	C	I	A
BIM Facility Maintenance Models and Data										
Updating Design Models	YES	I	C	A,R	R	R	R	C	C	I
Equipment Matrix	YES	C	C	C	C	C	C	A	C	C
Project Information Matrix	YES	C	C	A,R	C	C	C	R	C	C
BIM Team Record Models	YES									
Final Model	YES	I	C	A,R	R	R	R	C	I	I
Architectural Models	YES	I	C	A,R	I	I	I	C	I	I
Engineering Models	YES	I	C	A	I	I	R	C	I	I
Structural Models	YES	I	C	A	R	I	I	C	C	I
MEPFP Record Models	YES	I	C	A	I	I	C	A	R	I
Federated Record Model	YES	I	C	C	C	C	C	A	C	I
Record Model Utilization Instructions	YES	I	C	A	C	C	C	C	C	I

R **RESPONSIBLE**
Those who do the work to achieve the task.

A **ACCOUNTABLE**
Ultimately answerable for the correct & thorough completion of the deliverable/task, delegates the work to those responsible.

C **CONSULTED**
Those whose opinions are sought, typically subject matter experts; and with whom there is two-way communication.

I **INFORMED**
Those kept up-to-date on progress, often on completion of the task/deliverable; typically just one-way communication.

EXHIBIT Q

EXECUTION OF OFFER

(From Construction Manager's Proposal. To be inserted prior to execution of this Agreement.)

EXHIBIT R

PRICING AND DELIVERY PROPOSAL

(From Construction Manager's Proposal. To be inserted prior to execution of this Agreement.)