MD Anderson Agreement No. _____

MD Anderson Project No. 20-0107

STANDARD AGREEMENT
BETWEEN OWNER AND CONTRACTOR
For
Construction Services
for
The University of Texas MD Anderson Cancer Center

This Agreement is made as of _____, (the "Effective Date"), by and between

The **Owner**:	The Board of Regents of The University of Texas System c/o The University of Texas MD Anderson Cancer Center 1515 Holcombe Blvd. Houston, Texas 77030
and **Contractor**:	**[INSERT NAME AND ADDRESS]**
Texas Tax Account No. :	**[INSERT FIRM'S TAX ID #]**
for the **Project**:	BF-SHP-Student Commons Build-Out
MD Anderson Project Number:	20-0107
UTUGC Version:	2013, Rev. 06/14/2018
Project Architect / Engineer:	Courtney Harper + Partners 3801 Kirby, Suite 244 Houston, Texas 77098
Owner Controlled Insurance Program (OCIP):	No
Owner Provided Builder's Risk Insurance:	No

The Owner and the Contractor agree as follows:

TABLE OF CONTENTS

ARTICLE

1 SCOPE OF WORK
2 CONTRACT DOCUMENTS
3 THE CONTRACT SUM
4 TIME OF COMPLETION
5 LIQUIDATED DAMAGES
6 HUB SUBCONTRACTING PLAN
7 SAFETY
8 CERTIFICATION OF NO ASBESTOS CONTAINING MATERIALS OR WORK
9 PRE-EXISTING CONDITIONS
10 BONDS AND INSURANCE
11 OCIP INSURED PROJECT (NOT USED)
12 CONTRACTOR'S SPECIAL WARRANTIES AND RESPONSIBILITIES
13 INDEMNITY
14 PARTY REPRESENTATIVES
15 NOTICES
16 MISCELLANEOUS PROVISIONS

LIST OF EXHIBITS

The following Exhibits are incorporated into the Agreement as if set out verbatim:

Exhibit A – 2013 Uniform General Conditions for University of Texas System Building Construction Contracts, Rev. 06/14/2018

Exhibit B – Owner's Division 00 and Division 01 Specifications

Exhibit C – List of Drawings, Specifications Addenda, details and other documents developed by Project Engineer that describe the Project with the date they were issued.

Exhibit D – Rider 104-C; Policy on Utilization Historically Underutilized Businesses

Exhibit E – Contractor's Approved HUB Subcontracting Plan

Exhibit F – Rider 105; Contractor's Affirmations and Warranties

Exhibit G – Rider 106; Premises Rules

Exhibit H – Rider 107; Travel Policy

Exhibit I – Rider 116; Invoice Payment Requirements

Exhibit J– Rider 117; Institutional Policies

Exhibit K – Respondent's Pricing and Delivery Proposal and Execution of Offer

Exhibit L– Performance and Payment Bond

Capitalized words or phrases appearing within this Agreement are defined herein or in the Uniform General Conditions for University of Texas System Building Construction Contracts attached hereto.

ARTICLE 1 SCOPE OF WORK:

The Contractor has overall responsibility for and shall provide and furnish all materials, equipment, tools and labor as necessary or reasonably inferable to complete the Work, or any phase of the Work, in accordance with the Owner's requirements and the terms of the Contract Documents.

ARTICLE 2 CONTRACT DOCUMENTS:

2.1 The Contract Documents consist of:

a. This Agreement and all exhibits and attachments listed, contained or referenced in this Agreement;
b. The Uniform General Conditions for The University of Texas System Building Construction Contracts (UTUGC), applicable version identified, above;
c. Special Conditions and Owner's Specifications;
d. All Addenda issued before the Effective Date of this Agreement;
e. All Proposals for Alternate Scopes of Work and Proposed Alternates accepted by the Owner before the Effective Date of this Agreement;
f. All Change Orders issued after the Effective Date of this Agreement;
g. The Drawings, Specifications, details and other documents developed by Project Architect Engineer to describe the Project and accepted by Owner;
h. The Drawings and Specifications developed or prepared by Owner's other consultants, if any, and accepted by the Owner; and
i. The HUB Subcontracting Plan submitted by the Contractor in response to the Request for Competitive Sealed Proposals issued by the Owner for this Project.
j. Contractor's Proposal if incorporated into the Project. To the extent of any conflict between Contractor's Proposal and any other Contract Document, the Contact Document shall govern.

2.2 Contract Documents form the entire and integrated Contract between Owner and Contractor and supersede all prior negotiations, representations or agreements, written or oral.

ARTICLE 3 THE CONTRACT SUM:

3.1 The Owner shall pay the Contractor for performance of the Work set forth in the Contract Documents, including the Base Scope of Work, Alternates Scope(s) of Work, and accepted Proposed Alternates, the sum of **[INSERT WRITTEN AMOUNT], [INSERT NUMBER]**, and make payment on account as provided in the UTUGCs.

ARTICLE 4 TIME OF COMPLETION:

The Owner shall issue a Notice to Proceed with Construction identifying the date for commencement of the Work. The Date of Commencement shall be 10 or more days after the date the notice is issued. The Contractor shall achieve Substantial Completion of the Work within **SIXTY ONE (61)** calendar days after the Date of Commencement, as such completion date may be extended by approved Change Orders. **THE TIME SET FORTH FOR COMPLETION OF THE WORK IS AN ESSENTIAL ELEMENT OF THE CONTRACT.**

ARTICLE 5 LIQUIDATED DAMAGES:

For each consecutive calendar day after the expiration of the substantial completion period set forth in Article 4 that any incomplete Work prevents or impairs the Owner's ability to operate and use the Project for its intended purposes, including the correction of deficiencies found during the final testing and inspection, the amount of **SIX HUNDRED DOLLARS AND NO/100 ($600.00)** per day will be deducted from the money due or that becomes due the Contractor, not as a penalty but as liquidated damages representing the parties' estimate at the time of executing this Agreement of the damages that the Owner will sustain for late completion.

ARTICLE 6 HUB SUBCONTRACTING PLAN:

The Owner has adopted Policy on Utilization of Historically Underutilized Business ("Policy"), which is incorporated herein by reference. Contractor, as a provision of the Agreement must comply with the requirements of the Policy and adhere to the HUB Subcontracting Plan submitted with Contractor's Proposal. No changes to the HUB Subcontracting Plan can be made by the Contractor without the prior written approval of the Owner in accordance with the Policy.

ARTICLE 7 SAFETY:

7.1 In accordance with the UTUGCs, Contractor is responsible for initiating, maintaining, and supervising all safety precautions and programs in connection with the Work. The safety program shall comply with all applicable requirements of the Occupational Safety and Health Act of 1970 and all other applicable federal, state and local laws and regulations and with the requirements of Owner's project safety specification.

7.2 Contractor shall provide recommendations and information to Owner and Project Architect Engineer regarding the assignment of responsibilities for safety precautions and programs, temporary Project facilities, and equipment, materials, and services for common use of the Subcontractors. Contractor shall verify that appropriate safety provisions are included in the Construction Documents. The existence or creation of any Owner controlled insurance program in connection with the Work shall not lessen or reduce the Contractor's safety responsibilities.

ARTICLE 8 CERTIFICATION OF NO ASBESTOS CONTAINING MATERIALS OR WORK:

8.1 The Contractor shall be responsible for ensuring that no asbestos containing materials or work is included within the scope of the Work. The Contractor shall take whatever measures it deems necessary to insure that all employees, suppliers, fabricators, material men, subcontractors, or their assigns, comply with this requirement.

8.2 The Contractor shall ensure that Texas Department of Health licensed individuals, consultants or companies are used for any required asbestos work including asbestos inspection, asbestos abatement plans/specifications, asbestos abatement, asbestos project management and third-party asbestos monitoring.

8.3 At Substantial Completion and Final Completion the Contractor shall provide a certification letter certifying that the Work does not contain asbestos as required by the UTUGCs.

ARTICLE 9 PRE-EXISTING CONDITIONS:

Prior to commencing the Work, Contractor shall be provided unrestricted access to the existing improvements and conditions on the Project site and shall thoroughly investigate those conditions. Contractor shall bring to Owner's attention any unexpected or differing conditions that may impact the Contract Time or the Contract Sum. Contractor acknowledges and agrees that it shall not make or be entitled to any adjustment to the Contract Time or the Contract Sum arising from Project conditions that Contractor discovered or, in the exercise of reasonable care, should have discovered in Contractor's investigation.

ARTICLE 10 BONDS AND INSURANCE:

10.1 The Contractor shall provide performance and payment bonds on forms prescribed by Owner and in accordance with the requirements set forth in the UTUGCs. The penal sum of the payment and performance bonds shall be equal to the Contract Sum.

10.2 The Contractor shall not commence work under the Agreement until it has obtained all insurance coverage as required by the UTUGCs and until evidence of the required insurance has been reviewed and approved by the Owner. Owner's review of the insurance shall not relieve nor decrease the liability of the Contractor.

10.3 In the event that the Owner **does** implement an Owner Controlled Insurance Program (OCIP) for this Project, the Contractor shall refer to the OCIP specification for a complete listing of coverages provided by the OCIP. Any coverages required by the UTUGCs that is not provided through the OCIP shall be provided by the Contractor.

ARTICLE 11 OCIP INSURED PROJECT (NOT USED)

ARTICLE 12 CONTRACTOR'S SPECIAL WARRANTIES AND RESPONSIBILITIES

12.1 Contractor agrees and acknowledges that Owner is entering into this Agreement in reliance on Contractor's represented expertise and ability to provide construction services. Contractor agrees to use its best efforts, skill, judgment, and abilities to perform its obligations and to further the interests of Owner in accordance with Owner's requirements and procedures.

12.2 Contractor represents and agrees that it will perform its services in accordance with the usual and customary standards of Contractor's profession or business and in compliance with all applicable national, federal, state, and municipal, laws, regulations, codes, ordinances, orders and with those of any other body having jurisdiction over the Project. Contractor agrees to bear the full cost of correcting Contractor's negligent or improper work and services, those of its consultants, and any harm caused by the negligent or improper work or services.

12.3 Contractor's duties shall not be diminished by any approval by Owner nor shall the Contractor be released from any liability by any approval by Owner, it being understood that the Owner is ultimately relying upon the Contractor's skill and knowledge in performing the services required by this Agreement.

12.4 Contractor represents and agrees that all persons connected with the Contractor directly in charge of its services are duly registered and/or licensed under the laws, rules and regulations of any authority having jurisdiction over the Project if registration is required.

12.5 Contractor represents and agrees to advise Owner of anything of any nature in any drawings, specifications, plans, sketches, instructions, information, requirements, procedures, and other data supplied to the Contractor (by the Owner or any other party) that is, in its opinion, unsuitable, improper, or inaccurate for the purposes for which the document or data is furnished.

12.6 The Contractor represents and agrees to perform its services under this Agreement in an expeditious and economical manner consistent with good business practices and the interests of Owner.

12.7 Contractor represents and agrees that there are no obligations, commitments, or impediments of any kind that will limit or prevent performance of its obligations under this Agreement.

12.8 Contractor represents and agrees that the individual executing this Agreement on behalf of Contractor has been duly authorized to act for and to bind Contractor to its terms.

12.9 Contractor shall designate a representative authorized to act on Contractor's behalf with respect to the Project.

12.10 Contractor shall establish and maintain a numbering and tracking system for all Project records including, but not limited to, changes, requests for information, submittals, and supplementary instructions and shall provide updated records to the Owner when requested.

12.11 Except for the obligation of Owner to pay Contractor certain fees, costs, and expenses pursuant to the terms of this Agreement, Owner shall have no liability to Contractor or to anyone claiming through or under Contractor by reason of the execution or performance of this Agreement. Notwithstanding any obligation or liability of Owner to Contractor, no present or future partner or affiliate of Owner or any agent, officer, director, employee, or regent of Owner, The University of Texas System, or of the components comprising The University of Texas System, or anyone claiming under Owner has or shall have any personal liability to Contractor or to anyone claiming through or under Contractor by reason of the execution or performance of this Agreement.

ARTICLE 13 INDEMNITY:

13.1 SEE ARTICLE 3 OF THE UNIFORM GENERAL CONDITIONS FOR UNIVERSITY OF TEXAS SYSTEM BUILDING CONSTRUCTIOIN CONTRACTS FOR CONTRACTOR'S GENERAL INDEMNIFICATION OBLIGATIONS.

ARTICLE 14 PARTY REPRESENTATIVES:

14.1 The Owner's Designated Representative authorized to act in the Owner's behalf with respect to the Project is:

Karen J. Mooney
Associate Vice President
Facilities Planning, Design & Construction
1515 Holcombe Blvd., Unit 0703
Houston, TX 77030

14.2 The Contractor's designated representative authorized to act on the Contractor's behalf and bind the Contractor with respect to the Project is:

[Name]
[Title]
[Address]
[Phone Number]
[Email Address]

14.3 The parties may make reasonable changes in their designated representatives upon advance written notice to the other party.

ARTICLE 15 NOTICES:

Notices of claims or disputes or other legal notices required by this Agreement shall be sent to the following persons at the indicated locations.

If to Owner:
Ben Melson
Senior Vice President and Chief Financial Officer
1515 Holcombe Blvd., Unit 1495
Houston, Texas 77030

With Copies to:
James H. Waters, J.D., P.E.
Director, Facilities Contracts & Controls
Facilities Planning Design & Construction
6900 Fannin, Suite 10.1024
Houston, Texas 77030

If to Contractor:
[Name]
[Title]
[Address]
[Phone Number]
[Email Address]

The parties may make reasonable changes in the person or place designated for receipt of notices upon advance written notice to the other party.

ARTICLE 16 MISCELLANEOUS PROVISIONS:

16.1 Assignment. This Agreement is a personal service contract for the services of Contractor, and Contractor's interest in this Agreement, duties hereunder and/or fees due hereunder may not be assigned or delegated to a third party without the written consent of the Owner.

16.2 Records of expenses pertaining to Additional Services and services performed on the basis of a Worker Wage Rate or Monthly Salary Rate shall be kept on the basis of generally accepted accounting principles and in accordance with cost accounting standards promulgated by the Federal Office of Management and Budget Cost Accounting Standards Board and shall be available for audit by the Owner or the Owner's authorized representative on reasonable notice.

16.3 Family Code Child Support Certification. Pursuant to Section 231.006, Texas Family Code, Contractor certifies that it is not ineligible to receive the award of or payments under this

Agreement and acknowledges that this Agreement may be terminated and payment may be withheld if this certification is inaccurate.

16.4 Franchise Tax Certification. A corporate or limited liability company Contractor certifies that it is not currently delinquent in the payment of any Franchise Taxes due under Chapter 171 of the *Texas Tax Code*, or that the corporation or limited liability company is exempt from the payment of such taxes, or that the corporation or limited liability company is an out-of-state corporation or limited liability company that is not subject to the Texas Franchise Tax, whichever is applicable.

16.5 Payment of Debt or Delinquency to the State. Pursuant to Sections 2107.008 and 2252.903, *Texas Government Code*, Contractor agrees that any payments owing to Contractor under this Agreement may be applied directly toward any debt or delinquency that Contractor owes the State of Texas or any agency of the State of Texas regardless of when it arises, until such debt or delinquency is paid in full.

16.6 Entire Agreement; Modifications. This Agreement supersedes all prior agreements, written or oral, between Contractor and Owner and shall constitute the entire Agreement and understanding between the parties with respect to the Project. This Agreement and each of its provisions shall be binding upon the parties and may not be waived, modified, amended or altered except by a writing signed by Contractor and Owner.

16.7 Captions. The captions of paragraphs in this Agreement are for convenience only and shall not be considered or referred to in resolving questions of interpretation or construction.

16.8 Governing Law and Venue. This Agreement and all of the rights and obligations of the parties and all of the terms and conditions shall be construed, interpreted and applied in accordance with and governed by and enforced under the laws of the State of Texas without reference to its conflicts of law provisions. Travis County, Texas or the county where the Project is located shall be the sole places of venue for any legal action arising from or related to this Agreement or the Project in which the Owner is a party.

16.9 Waivers. No delay or omission by either party in exercising any right or power arising from non-compliance or failure of performance by the other party with any of the provisions of this Agreement shall impair or constitute a waiver of any such right or power. A waiver by either party of any covenant or condition of this Agreement shall not be construed as a waiver of any subsequent breach of that or of any other covenant or condition of the Agreement.

16.10 Binding Effect. This Agreement shall be binding upon and inure to the benefit of the parties and their respective permitted assigns and successors.

16.11 Appointment. Owner hereby expressly reserves the right from time to time to designate by notice to Contractor a representative(s) to act partially or wholly for Owner in connection with

the performance of Owner's obligations. Contractor shall act only upon instructions from the designated representative(s) unless otherwise specifically notified to the contrary.

16.12 Records. Records of Contractor's costs, reimbursable expenses pertaining to the Project and payments shall be available to Owner or its authorized representative during business hours and shall be retained for four (4) years after Final Payment or abandonment of the Project, unless Owner otherwise instructs Contractor in writing.

16.13 Notices. All notices, consents, approvals, demands, requests or other communications relied on by the parties shall be in writing. Written notice shall be deemed to have been given when delivered in person to the designated representative of the Contractor or Owner for whom it is intended; or sent by U. S. Mail to the last known business address of the designated representative; or transmitted by fax machine to the last know business fax number of the designated representative. Mail notices are deemed effective upon receipt or on the third business day after the date of mailing, whichever is sooner. Fax notices are deemed effective the next business day after faxing.

16.14 Severability. Should any term or provision of this Agreement be held invalid or unenforceable in any respect, the remaining terms and provisions shall not be affected and this Agreement shall be construed as if the invalid or unenforceable term or provision had never been included.

16.15 Illegal Dumping. The Contractor shall ensure that it and all of its Subcontractors and assigns prevent illegal dumping of litter in accordance with Title 5, *Texas Health and Safety Code*, Chapter 365.

16.16 By signature hereon, Contractor certifies that no member of the Board of Regents of The University of Texas System, or Executive Officers, including component institutions, has a financial interest, directly or indirectly, in the transaction that is the subject of this contract.

16.17 Ethics Matters; No Financial Interest. Contractor and its employees, agents, representatives and subcontractors have read and understand University's Conflicts of Interest Policy available at http://www.utsystem.edu/policy/policies/int160.html, University's Standards of Conduct Guide available at http://www.utsystem.edu/systemcompliance/, and applicable state ethics laws and rules available at www.utsystem.edu/ogc/ethics. Neither Contractor nor its employees, agents, representatives or subcontractors will assist or cause University employees to violate University's Conflicts of Interest Policy, provisions described by University's Standards of Conduct Guide, or applicable state ethics laws or rules. Contractor represents and warrants that no member of the Board has a direct or indirect financial interest in the transaction that is the subject of this Agreement.

16.18 Disclosure of Interested Parties. By signature hereon, Contractor certifies that, if the value of this agreement exceeds $1 Million, it has complied with Section 2252.908 of the Texas

Government Code and Part 1 Texas Administrative Code Sections 46.1 through 46.3 as implemented by the Texas Ethics Commission (TEC), if applicable, and has provided the Owner with a fully executed TEC Form 1295, certified by the TEC and signed and notarized by the Contractor.

16.19 Contractor Certification regarding Boycotting Israel. Pursuant to Chapter 2270, *Texas Government Code*, Contractor certifies Contractor (1) does not currently boycott Israel; and (2) will not boycott Israel during the Term of this Agreement. Contractor acknowledges this Agreement may be terminated and payment withheld if this certification is inaccurate.

16.20 Contractor Certification regarding Business with Certain Countries and Organizations. Pursuant to Subchapter F, Chapter 2252, *Texas Government Code*], Contractor certifies Contractor is not engaged in business with Iran, Sudan, or a foreign terrorist organization. Contractor acknowledges this Agreement may be terminated and payment withheld if this certification is inaccurate.

16.21 Domestic Iron and Steel Certification. Pursuant to Sections 2252.201-2252.205 of the Government Code, Service Provider certifies that it is in compliance with the requirement that any iron or steel product produced through a manufacturing process and used in the project is produced in the United States.

EXHIBITS TO THIS AGREEMENT

The documents below are attached to and fully incorporated into this Agreement as substantive parts of this Agreement.

Exhibit A – 2013 Uniform General Conditions for University of Texas System Building Construction Contracts, Rev. 06/14/2018

Exhibit B – Owner's Division 00 (Conditions of the Contract) and Division 01 (General Requirements) Specifications

Exhibit C – List of Drawings, Specifications Addenda, details and other documents developed by the Project Architect Engineer that describe the Project with the date they were issued.

Exhibit D – Rider 104-C Policy on Utilization Historically Underutilized Businesses

Exhibit E – Contractor's Approved HUB Subcontracting Plan

Exhibit F – Rider 105; Contractor's Affirmations and Warranties

Exhibit G – Rider 106; Premises Rules

Exhibit H – Rider 107; Travel Policy

Exhibit I – Rider 116; Invoice Payment Requirements

Exhibit J – Rider 117; Institutional Policies

Exhibit K – Respondent's Pricing and Delivery Proposal and Execution of Offer

Exhibit L – Performance and Payment Bonds

Changes in the terms and conditions under which the Contractor must perform the Work to be completed under this Agreement shall become effective only upon the execution of a written Amendment to this Agreement. Changes in the Work, the Contract Sum, or the Contract Time shall become effective upon the execution of a Change Order, signed by duly authorized representatives of the parties. Contractor shall be authorized to proceed with the change as of the Notice to Proceed date set forth in the Change Order. Subsequent to the issuance of a Change Order, MD Anderson will issue a revised Purchase Order to Contractor. Contractor must receive the revised Purchase Order prior to requesting compensation for Work to be completed under the Change Order in its Application for Payment. Only duly authorized representatives of MD Anderson's Supply Chain Management department are authorized to execute amendments to this Agreement and issue Purchase Orders to bind MD Anderson for any payment to be made to Contractor pursuant to the terms of this Agreement.

Having agreed to the foregoing terms, and with the intention of being bound, the parties have caused this Agreement to be executed by their duly authorized representatives as of the Effective Date.

[Contractor's Name]

By: _____

Name: _____

Title: _____

Date: _____

CONTENT APPROVED:

Office of Vice President
Operations & Facilities Management

By: _____

Name: Spencer Moore

Title: Vice President and Chief Facilities Officer

Date: _____

THE UNIVERSITY OF TEXAS
M. D. ANDERSON CANCER CENTER
(Owner)

By: _____

Name: _____

Title: _____

Date: _____

EXHIBIT A

2013 UNIFORM GENERAL CONDITIONS
FOR
UNIVERSITY OF TEXAS SYSTEM BUILDING CONSTRUCTION CONTRACTS

2013 Uniform General Conditions

for

University of Texas System Building Construction Contracts

For use on all UT System and Institution Construction Projects

Last Revision: 06/20/2018 ems

Table of Contents

Article 1. Definitions

Article 2. Wage Rates and Other Laws Governing Construction

Article 3. General Responsibilities of Owner and Contractor

Article 4. Historically Underutilized Business (HUB) Subcontracting Plan

Article 5. Bonds and Insurance

Article 6. Construction Documents, Coordination Documents, and Record Documents

Article 7. Construction Safety

Article 8. Quality Control

Article 9. Construction Schedules

Article 10. Payments

Article 11. Changes

Article 12. Project Completion and Acceptance

Article 13. Warranty and Guarantee

Article 14. Suspension and Termination

Article 15. Dispute Resolution

Article 16. Certification of No Asbestos Containing Material or Work

Article 17. Miscellaneous

Issued on August 23, 2013

Article 1. Definitions

Unless the context clearly requires another meaning, the following terms have the meaning assigned herein.

1.1 *Application for Payment* means Contractor's monthly partial invoice for payment that includes any portion of the Work that has been completed for which an invoice has not been submitted and performed in accordance with the requirements of the Contract Documents. The Application for Payment accurately reflects the progress of the Work, is itemized based on the Schedule of Values, bears the notarized signature of Contractor, and shall not include subcontracted items for which Contractor does not intend to pay.

1.2 *Application for Final Payment* means Contractor's final invoice for payment that includes any portion of the Work that has been completed for which an invoice has not been submitted, amounts owing to adjustments to the final Contract Sum resulting from approved change orders, and release of remaining Contractor's retainage.

1.3 *Architect/Engineer (A/E)* means a person registered as an architect pursuant to Tex. Occ. Code Ann., Chapter 1051, as a landscape architect pursuant to Tex. Occ. Code Ann., Chapter 1052, a person licensed as a professional engineer pursuant Tex. Occ. Code Ann., Chapter 1001, and/or a firm employed by Owner or Design-Build Contractor to provide professional architectural or engineering services and to exercise overall responsibility for the design of a Project or a significant portion thereof, and to perform the contract administration responsibilities set forth in the Contract.

1.4 *Baseline Schedule* means the initial time schedule prepared by Contractor for Owner's information and acceptance that conveys Contractor's and Subcontractors' activities (including coordination and review activities required in the Contract Documents to be performed by A/E and ODR), durations, and sequence of work related to the entire Project to the extent required by the Contract Documents. The schedule clearly demonstrates the critical path of activities, durations and necessary predecessor conditions that drive the end date of the schedule. The Baseline Schedule shall not exceed the time limit current under the Contract Documents.

1.5 *Certificate of Final Completion* means the certificate issued by A/E that documents, to the best of A/E's knowledge and understanding, Contractor's completion of all Contractor's Punchlist items and pre-final Punchlist items, final cleanup and Contractor's provision of Record Documents, operations and maintenance manuals, and all other Close-Out documents required by the Contract Documents.

1.6 *Change Order* means a written modification of the Contract between Owner and Contractor, signed by Owner, Contractor and A/E.

1.7 *Close-out Documents* mean the product brochures, submittals, product/equipment maintenance and operations instructions, manuals, and other documents/warranties, record documents, affidavit of payment, release of lien and claim, and as may be further defined, identified, and required by the Contract Documents.

1.8 *Contract* means the entire agreement between Owner and Contractor, including all of the Contract Documents.

1.9 *Contract Date* is the date when the agreement between Owner and Contractor becomes effective.

1.10 *Contract Documents* mean those documents identified as a component of the agreement (Contract) between Owner and Contractor. These may include, but are not limited to, Drawings; Specifications; General Conditions and Owner's Special Conditions; and all pre-bid and/or pre-proposal addenda.

1.11 *Contract Sum* means the total compensation payable to Contractor for completion of the Work in accordance with the terms of the Contract.

1.12 *Contract Time* means the period between the start date identified in the Notice to Proceed with construction and the Substantial Completion date identified in the Notice to Proceed or as subsequently amended by a Change Order.

1.13 *Contractor* means the individual, corporation, limited liability company, partnership, firm, or other entity contracted to perform the Work, regardless of the type of construction contract used, so that the term as used herein includes a Construction Manager-at-Risk or a Design-Build firm as well as a general or prime Contractor. The Contract Documents refer to Contractor as if singular in number.

1.14 *Construction Documents* mean the Drawings, Specifications, and other documents issued to build the Project. Construction Documents become part of the Contract Documents when listed in the Contract or any Change Order.

1.15 *Construction Manager-at-Risk*, in accordance with Tex. Educ. Code § 51.782, means a sole proprietorship, partnership, corporation, or other legal entity that assumes the risk for construction, rehabilitation, alteration, or repair of a facility at the contracted price as a general contractor and provides consultation to Owner regarding construction during and after the design of the facility.

1.16 *Date of Commencement* means the date designated in the Notice to Proceed for Contractor to commence the Work.

1.17 *Day* means a calendar day unless otherwise specifically stipulated.

1.18 *Design-Build* means a project delivery method in which the detailed design and subsequent construction is provided through a single contract with a Design-Build firm; a team, partnership, or legal entity that includes design professionals and a builder. The Design-Build Project delivery shall be implemented in accordance with Tex. Educ. Code § 51.780.

1.19 *Drawings* mean that product of A/E which graphically depicts the Work.

1.20 *Final Completion* means the date determined and certified by A/E and Owner on which the Work is fully and satisfactorily complete in accordance with the Contract.

1.21 *Final Payment* means the last and final monetary compensation made to Contractor for any portion of the Work that has been completed and accepted for which payment has not been made, amounts owing to adjustments to the final Contract Sum resulting from approved change orders, and release of Contractor's retainage.

1.22 *Historically Underutilized Business (HUB)* pursuant to Tex. Gov't Code, Chapter 2161, means a business that is at least 51% owned by an Asian Pacific American, a Black American, a Hispanic American, a Native American and/or an American Woman; is an entity with its principal place of business in Texas; and has an owner residing in Texas with proportionate interest that actively participates in the control, operations, and management of the entity's affairs.

1.23 *Notice to Proceed* means written document informing Contractor of the dates beginning Work and the dates anticipated for Substantial Completion.

1.24 *Open Item List* means a list of work activities, Punchlist items, changes or other issues that are not expected by Owner and Contractor to be complete prior to Substantial Completion.

1.25 *Owner* means The Board of Regents of The University of Texas System, acting through the responsible entity of The University of Texas System or one of its Institutions as identified in the Contract as Owner.

1.26 *Owner's Designated Representative (ODR)* means the individual assigned by Owner to act on its behalf and to undertake certain activities as specifically outlined in the Contract. ODR is the only party

authorized to direct changes to the scope, cost, or time of the Contract.

1.27 *Owner's Special Conditions* mean the documents containing terms and conditions which may be unique to the Project. Owner's Special Conditions are a part of the Contract Documents and have precedence over the Uniform General Conditions

1.28 *Project* means all activities necessary for realization Owner's desired building or other structure including all ancillary and related work. This includes design, contract award(s), execution of the Work itself, work by Owner's forces and/or other contractors and fulfillment of all Contract and warranty obligations.

1.29 *Progress Assessment Report (PAR)* means the monthly compliance report to Owner verifying compliance with the HUB subcontracting plan (HSP).

1.30 *Proposed Change Order (PCO)* means a document that informs Contractor of a proposed change in the Work and appropriately describes or otherwise documents such change including Contractor's response of pricing for the proposed change.

1.31 *Punchlist* means a list of items of Work to be completed or corrected by Contractor before Final Completion. The Punchlist(s) indicates items to be finished, remaining Work to be performed, or Work that does not meet quality or quantity requirements as required in the Contract Documents.

1.32 *Record Documents* mean the drawing set, Specifications, and other materials maintained by Contractor that documents all addenda, Architect's Supplemental Instructions, Change Orders and postings and markings that record the as-constructed conditions of the Work and all changes made during construction.

1.33 *Request for Information (RFI)* means a written request by Contractor directed to A/E or ODR for a clarification of the information provided in the Contract Documents or for direction concerning information necessary to perform the Work that may be omitted from the Contract Documents.

1.34 *Samples* mean representative physical examples of materials, equipment, or workmanship used to confirm compliance with requirements and/or to establish standards for use in execution of the Work.

1.35 *Schedule of Values* means the detailed breakdown of the cost of the materials, labor, and equipment necessary to accomplish the Work as described in the Contract Documents, submitted by Contractor for approval by Owner and A/E.

1.36 *Shop Drawings* mean the drawings, diagrams, illustrations, schedules, performance charts, brochures, and other data prepared by Contractor or its agents which detail a portion of the Work.

1.37 *Site* means the geographical area of the location of the Work.

1.38 *Specifications* mean the written product of A/E that establishes the quality and/or performance of products utilized in the Work and processes to be used, including testing and verification for producing the Work.

1.39 *Subcontractor* means a business entity that enters into an agreement with Contractor to perform part of the Work or to provide services, materials, or equipment for use in the Work.

1.40 *Submittal Register* means a list provided by Contractor of all items to be furnished for review and approval by A/E and Owner and as identified in the Contract Documents including anticipated sequence and submittal dates.

1.41 *Substantial Completion* means the date determined and certified by Contractor, A/E, and Owner when the Work, or a designated portion thereof, is sufficiently complete, in accordance with the Contract, so

as to be operational and fit for the use intended.

1.42 *Unit Price Work* means the Work, or a portion of the Work, paid for based on incremental units of measurement.

1.43 *Unilateral Change Order (ULCO)* means a Change Order issued by Owner without the complete agreement of Contractor, as to cost and/or time.

1.44 *Work* means the administration, procurement, materials, equipment, construction and all services necessary for Contractor, and/or its agents, to fulfill Contractor's obligations under the Contract.

1.45 *Work Progress Schedule* means the continually updated time schedule prepared and monitored by Contractor that accurately indicates all necessary appropriate revisions as required by the conditions of the Work and the Project while maintaining a concise comparison to the Baseline Schedule.

Article 2. Wage Rates and Other Laws Governing Construction

2.1 Environmental Regulations. Contractor shall conduct activities in compliance with applicable laws and regulations and other requirements of the Contract relating to the environment and its protection at all times. Unless otherwise specifically determined, Owner is responsible for obtaining and maintaining permits related to stormwater run-off. Contractor shall conduct operations consistent with stormwater run-off permit conditions. Contractor is responsible for all items it brings to the Site, including hazardous materials, and all such items brought to the Site by its Subcontractors and suppliers, or by other entities subject to direction of Contractor. Contractor shall not incorporate hazardous materials into the Work without prior approval of Owner, and shall provide an affidavit attesting to such in association with request for Substantial Completion inspection.

2.2 Wage Rates. Contractor shall not pay less than the wage scale of the various classes of labor as shown on the prevailing wage schedule provided by Owner in the bid or proposal specifications. The specified wage rates are minimum rates only. Owner is not bound to pay any claims for additional compensation made by any Contractor because the Contractor pays wages in excess of the applicable minimum rate contained in the Contract. The prevailing wage schedule is not a representation that qualified labor adequate to perform the Work is available locally at the prevailing wage rates.

2.2.1 Notification to Workers. Contractor shall post the prevailing wage schedule in a place conspicuous to all workers on the Project Site and shall notify each worker, in writing, of the following as they commence work on the Contract: the worker's job classification, the established minimum wage rate requirement for that classification, as well as the worker's actual wage. The notice must be delivered to and signed in acknowledgement of receipt by the worker and must list both the wages and fringe benefits to be paid or furnished for each classification in which the worker is assigned duties. When requested by Owner, Contractor shall furnish evidence of compliance with the Texas Prevailing Wage Law and the addresses of all workers.

2.2.1.1 Contractor shall submit a copy of each worker's wage-rate notification to ODR with the application for progress payment for the period during which the worker was engaged in activities on behalf of the Project.

2.2.1.2 The prevailing wage schedule is determined by Owner in compliance with Tex. Gov't Code, Chapter 2258. Should Contractor at any time become aware that a particular skill or trade not reflected on Owner's prevailing wage schedule will be or is being employed in the Work, whether by Contractor or by Subcontractor, Contractor shall promptly inform ODR of the proposed wage to be paid for the skill along with a justification for same and ODR shall promptly concur with or reject the proposed wage and classification. Contractor is responsible for determining the most appropriate wage for a particular skill in relation to similar skills or trades

identified on the prevailing wage schedule. In no case, shall any worker be paid less than the wage indicated for laborers.

2.2.2 Penalty for Violation. Contractor, and any Subcontractor, will pay to the State a penalty of sixty dollars ($60) for each worker employed for each day, or portion thereof, that the worker is paid less than the wage rates stipulated in the prevailing wage schedule.

2.2.3 Complaints of Violations.

2.2.3.1 Owner's Determination of Good Cause. Upon receipt of information concerning a violation, Owner will conduct an investigation in accordance with Tex. Gov't Code, Chapter 2258 and make an initial determination as to whether good cause exists that a violation occurred. Upon making a good cause finding, Owner will retain the full amounts claimed by the claimant or claimants as the difference between wages paid and wages due under the prevailing wage schedule and any supplements thereto, together with the applicable penalties, such amounts being subtracted from successive progress payments pending a final decision on the violation.

2.2.3.2 No Extension of Time. If Owner's determination proves valid that good cause existed to believe a violation had occurred, Contractor is not entitled to an extension of time for any delay arising directly or indirectly from the arbitration procedures.

2.3 Venue for Suits. The venue for any suit arising from the Contract will be in a court of competent jurisdiction in Travis County, Texas, or as may otherwise be designated in the Owner's Special Conditions.

2.4 Licensing of Trades. Contractor shall comply with all applicable provisions of State law related to license requirements for skilled tradesmen, contractors, suppliers and or laborers, as necessary to accomplish the Work. In the event Contractor, or one of its Subcontractors, loses its license during the term of performance of the Contract, Contractor shall promptly hire or contract with a licensed provider of the service at no additional cost to Owner.

2.5 Royalties, Patents, and Copyrights. Contractor shall pay all royalties and license fees, defend suits or claims for infringement of copyrights and patent rights, and shall hold Owner harmless from loss on account thereof, but shall not be responsible for such defense or loss when a particular design, process or product of a particular manufacturer or manufacturers is required by the Contract Documents, or where the copyright violations are contained in Drawings, Specifications or other documents prepared by Owner or A/E. However, if Contractor has reason to believe that the required design, process, or product is an infringement of a copyright or a patent, Contractor shall be responsible for such loss unless such information is promptly furnished to A/E.

2.6 State Sales and Use Taxes. Owner qualifies for exemption from certain State and local sales and use taxes pursuant to the provisions of Tex. Tax Code, Chapter 151. Upon request from Contractor, Owner shall furnish evidence of tax exempt status. Contractor may claim exemption from payment of certain applicable State taxes by complying with such procedures as prescribed by the State Comptroller of Public Accounts. Owner acknowledges not all items qualify for exemption. Owner is not obligated to reimburse Contractor for taxes paid on items that qualify for tax exemption.

Article 3. General Responsibilities of Owner and Contractor

3.1 Owner's General Responsibilities. Owner is the entity identified as such in the Contract and referred to throughout the Contract Documents as if singular in number.

3.1.1 Preconstruction Conference. Prior to, or concurrent with, the issuance of Notice to Proceed with construction, a conference will be convened for attendance by Owner, Contractor, A/E and appropriate Subcontractors. The purpose of the conference is to establish a working

understanding among the parties as to the Work, the operational conditions at the Project Site, and general administration of the Project. Topics include communications, schedules, procedures for handling Shop Drawings and other submittals, processing Applications for Payment, maintaining required records and all other matters of importance to the administration of the Project and effective communications between the Project team members.

3.1.2 Owner's Designated Representative. Prior to the start of construction, Owner will identify Owner's Designated Representative (ODR), who has the express authority to act and bind Owner to the extent and for the purposes described in the various Articles of the Contract, including responsibilities for general administration of the Contract.

3.1.2.1 Unless otherwise specifically defined elsewhere in the Contract Documents, ODR is the single point of contact between Owner and Contractor. Notice to ODR, unless otherwise noted, constitutes notice to Owner under the Contract.

3.1.2.2 All directives on behalf of Owner will be conveyed to Contractor and A/E by ODR in writing.

3.1.2.3 Owner will furnish or cause to be furnished, free of charge, the number of complete sets of the Drawings, Specifications, and addenda as provided in the Agreement or Special Conditions.

3.1.3 Owner Supplied Materials and Information.

3.1.3.1 Owner will furnish to Contractor those surveys describing the physical characteristics, legal description, limitations of the Site, Site utility locations, and other information used in the preparation of the Contract Documents.

3.1.3.2 Owner will provide information, equipment, or services under Owner's control to Contractor with reasonable promptness.

3.1.4 Availability of Lands. Owner will furnish, as indicated in the Contract, all required rights to use the lands upon which the Work occurs. This includes rights-of-way and easements for access and such other lands that are designated for use by Contractor. Contractor shall comply with all Owner identified encumbrances or restrictions specifically related to use of lands so furnished. Owner will obtain and pay for easements for permanent structures or permanent changes in existing facilities, unless otherwise required in the Contract Documents.

3.1.5 Limitation on Owner's Duties.

3.1.5.1 Owner will not supervise, direct, control or have authority over or be responsible for Contractor's means, methods, technologies, sequences or procedures of construction or the safety precautions and programs incident thereto. Owner is not responsible for any failure of Contractor to comply with laws and regulations applicable to the Work. Owner is not responsible for the failure of Contractor to perform or furnish the Work in accordance with the Contract Documents. Except as provided in Section 2.5, Owner is not responsible for the acts or omissions of Contractor, or any of its Subcontractors, suppliers or of any other person or organization performing or furnishing any of the Work on behalf of Contractor.

3.1.5.2 Owner will not take any action in contravention of a design decision made by A/E in preparation of the Contract Documents, when such actions are in conflict with statutes under which A/E is licensed for the protection of the public health and safety.

3.2 Role of Architect/Engineer. Unless specified otherwise in the Contract between Owner and Contractor,

A/E shall provide general administration services for Owner during the construction phase of the project. Written correspondence, requests for information, and Shop Drawings/submittals shall be directed to A/E for action. A/E has the authority to act on behalf of Owner to the extent provided in the Contract Documents, unless otherwise modified by written instrument, which will be furnished to Contractor by ODR, upon request.

3.2.1 Site Visits.

3.2.1.1 A/E will make visits to the Site at intervals as provided in the A/E's Contract (or the Design/Build Contractor's Contract, if applicable) with Owner, to observe the progress and the quality of the various aspects of Contractor's executed Work and report findings to Owner.

3.2.1.2 A/E has the authority to interpret Contract Documents and inspect the Work for compliance and conformance with the Contract. Except as referenced in Paragraph 3.1.5.2, Owner retains the sole authority to accept or reject Work and issue direction for correction, removal, or replacement of Work.

3.2.2 Clarifications and Interpretations. It may be determined that clarifications or interpretations of the Contract Documents are necessary. Upon direction by ODR, such clarifications or interpretations will be provided by A/E consistent with the intent of the Contract Documents. A/E will issue these clarifications with reasonable promptness to Contractor as A/E's supplemental instruction ("ASI") or similar instrument. If Contractor believes that such clarification or interpretation justifies an adjustment in the Contract Sum or the Contract Time, Contractor shall so notify Owner in accordance with the provisions of Article 11.

3.2.3 Limitations on Architect/Engineer Authority. A/E is not responsible for:

3.2.3.1 Contractor's means, methods, techniques, sequences, procedures, safety, or programs incident to the Project, nor will A/E supervise, direct, control or have authority over the same;

3.2.3.2 The failure of Contractor to comply with laws and regulations applicable to the furnishing or performing the Work;

3.2.3.3 Contractor's failure to perform or furnish the Work in accordance with the Contract Documents; or

3.2.3.4 Acts or omissions of Contractor, or of any other person or organization performing or furnishing any of the Work.

3.3 Contractor's General Responsibilities. Contractor is solely responsible for implementing the Work in full compliance with all applicable laws and the Contract Documents and shall supervise and direct the Work using the best skill and attention to assure that each element of the Work conforms to the Contract requirements. Contractor is solely responsible for all construction means, methods, techniques, safety, sequences, coordination and procedures.

Contractor shall visit the Site before commencing the Work and become familiar with local conditions such as the location, accessibility and general character of the Site and/or building.

3.3.1 Project Administration. Contractor shall provide Project administration for all Subcontractors, vendors, suppliers, and others involved in implementing the Work and shall coordinate administration efforts with those of A/E and ODR in accordance with these general conditions, Division 1 of the Specifications and other provisions of the Contract, and as outlined in the pre-construction conference.

3.3.1.1 At the request of Owner and at no additional cost, Contractor shall furnish to the ODR one copy of the current edition of the RSMeans Facilities Construction Cost Data Book in hard copy format or digital medium as directed by the ODR.

3.3.2 Contractor's Management Personnel. Contractor shall employ a competent person or persons who will be present at the Project Site during the progress of the Work to supervise or oversee the work. The competent persons are subject to the approval of ODR. Contractor shall not change approved staff during the course of the project without the written approval of ODR unless the staff member leaves the employment of Contractor. Contractor shall provide additional quality control, safety and other staff as stated in the Contract Documents.

3.3.3 Labor. Contractor shall provide competent, suitably qualified personnel to survey, lay-out, and construct the Work as required by the Contract Documents and maintain good discipline and order at the Site at all times.

3.3.4 Services, Materials, and Equipment. Unless otherwise specified, Contractor shall provide and assume full responsibility for all services, materials, equipment, labor, transportation, construction equipment and machinery, tools, appliances, fuel, power, light, heat, telephone, water, sanitary facilities, temporary facilities, and all other facilities, incidentals, and services necessary for the construction, performance, testing, start-up, inspection and completion of the Work.

3.3.5 Contractor General Responsibility. For Owner furnished equipment or material that will be in the care, custody, and control of Contractor, Contractor is responsible for damage or loss.

3.3.6 Non-Compliant Work. Should A/E and/or ODR identify Work as non-compliant with the Contract Documents, A/E and/or ODR shall communicate the finding to Contractor, and Contractor shall correct such Work at no additional cost to the Owner. The approval of Work or the failure to find non-compliant Work by either A/E or ODR does not relieve Contractor from the obligation to comply with all requirements of the Contract Documents.

3.3.7 Subcontractors. Contractor shall not employ any Subcontractor, supplier or other person or organization, whether initially or as a substitute, against whom Owner shall have reasonable objection. Owner will communicate such objections in writing within ten (10) days of receipt of Contractor's intent to use such Subcontractor, supplier, or other person or organization. Contractor is not required to employ any Subcontractor, supplier or other person or organization to furnish any of the work to whom Contractor has reasonable objection. Contractor shall not substitute Subcontractors without the acceptance of Owner.

3.3.7.1 All Subcontracts and supply contracts shall be consistent with and bind the Subcontractors and suppliers to the terms and conditions of the Contract Documents including provisions of the Contract between Contractor and Owner.

3.3.7.2 Contractor shall be solely responsible for scheduling and coordinating the Work of Subcontractors, suppliers and other persons and organizations performing or furnishing any of the Work under a direct or indirect contract with Contractor. Require all Subcontractors, suppliers and such other persons and organizations performing or furnishing any of the Work to communicate with Owner only through Contractor. Contractor shall furnish to Owner a copy, at Owner's request, of each first-tier subcontract promptly after its execution. Contractor agrees that Owner has no obligation to review or approve the content of such contracts and that providing Owner such copies in no way relieves Contractor of any of the terms and conditions of the Contract, including, without limitation, any provisions of the Contract which require the Subcontractor to be bound to Contractor in the same manner in which Contractor is bound to Owner.

3.3.8 Continuing the Work. Contractor shall carry on the Work and adhere to the progress schedule during all disputes, disagreements, or alternative resolution processes with Owner. Contractor shall not delay or postpone any Work because of pending unresolved disputes, disagreements or alternative resolution processes, except as Owner and Contractor may agree in writing.

3.3.9 Cleaning. Contractor shall at all times, keep the Site and the Work clean and free from accumulation of waste materials or rubbish caused by the construction activities under the Contract. Contractor shall ensure that the entire Project is thoroughly cleaned prior to requesting Substantial Completion inspection and, again, upon completion of the Project prior to the final inspection.

3.3.10 Acts and Omissions of Contractor, its Subcontractors and Employees. Contractor shall be responsible for acts and omissions of his employees and all its Subcontractors, their agents and employees. Owner may, in writing, require Contractor to remove from the Project any of Contractor's or its Subcontractor's employees whom ODR finds to be careless, incompetent, unsafe, uncooperative, disruptive, or otherwise objectionable.

3.3.11 Ancillary Areas. Contractor shall operate and maintain operations and associated storage areas at the site of the Work in accordance with the following:

3.3.11.1 All Contractor operations, including storage of materials and employee parking upon the Site of Work, shall be confined to areas designated by Owner.

3.3.11.2 Contractor may erect, at its own expense, temporary buildings that will remain its property. Contractor shall remove such buildings and associated utility service lines upon completion of the Work, unless Contractor requests and Owner provides written consent that it may abandon such buildings and utilities in place.

3.3.11.3 Contractor shall use only established roadways or construct and use such temporary roadways as may be authorized by Owner. Contractor shall not allow load limits of vehicles to exceed the limits prescribed by appropriate regulations or law. Contractor shall provide protection to road surfaces, curbs, sidewalks, trees, shrubbery, sprinkler systems, drainage structures and other like existing improvements to prevent damage and repair any damage thereto at the expense of Contractor.

3.3.11.4 Owner may restrict Contractor's entry to the Site to specifically assigned entrances and routes.

3.3.12 Separate Contracts. Owner reserves the right to award other contracts in connection with the Project under the same or substantially similar contract terms, including those portions related to insurance and waiver of subrogation. Owner reserves the right to perform operations related to the Project with Owner's own forces.

3.3.13 Under a system of separate contracts, the conditions described herein continue to apply except as may be amended by change order.

3.3.14 Contractor shall cooperate with other contractors or forces employed on the Project by Owner, including providing access to Site, integration of activities within Contractor's Work Progress Schedule and Project information as requested.

3.3.15 Owner shall be reimbursed by Contractor for costs incurred by Owner which are payable to a separate contractor because of delays, improperly timed activities, or defective construction by Contractor. Owner will equitably adjust the Contract by Change Order for costs incurred by Contractor because of delays, improperly timed activities, damage to the Work or defective construction by a separate contractor.

3.4 Indemnification of Owner.

3.4.1 Contractor covenants and agrees to FULLY INDEMNIFY and HOLD HARMLESS, Owner and the elected and appointed officials, employees, officers, directors, volunteers, and representatives of Owner, individually or collectively, from and against any and all costs, claims, liens, damages, losses, expenses, fees, fines, penalties, proceedings, actions, demands, causes of action, liability and suits of any kind and nature, including but not limited to, personal or bodily injury, death or property damage, made upon Owner directly or indirectly arising out of, resulting from or related to Contractor's activities under this Contract, including any acts or omissions of Contractor, or any agent, officer, director, representative, employee, consultant or the Subcontractor of Contractor, and their respective officers, agents, employees, directors and representatives while in the exercise of performance of the rights or duties under this Contract. The indemnity provided for in this paragraph does not apply to any liability resulting from the negligence of the Owner, its officers or employees, separate contractors or assigned contractors, in instances where such negligence causes personal injury, death or property damage. IN THE EVENT CONTRACTOR AND OWNER ARE FOUND JOINTLY LIABLE BY A COURT OF COMPETENT JURISDICTION, LIABILITY WILL BE APPORTIONED COMPARATIVELY IN ACCORDANCE WITH THE LAWS OF THE STATE OF TEXAS, WITHOUT WAIVING ANY GOVERNMENTAL IMMUNITY AVAILABLE TO THE STATE UNDER TEXAS LAW AND WITHOUT WAIVING ANY DEFENSES OF THE PARTIES UNDER TEXAS LAW.

3.4.2 **Contractor shall protect and indemnify the Owner from and against all claims, damages, judgments and losses arising from infringement or alleged infringement of any United States patent, or copyright that arise out of any of the work performed by the Contractor or the use by Contractor, or by Owner at the direction of Contractor, of any article or material. Upon becoming aware of a suit or threat of suit for patent or copyright infringement, Owner shall promptly notify Contractor and Contractor shall be given full opportunity to negotiate a settlement. Contractor does not warrant against infringement by reason of Owner's or Project Architect's design of articles or their use in combination with other materials or in the operation of any process. In the event of litigation, Owner agrees to cooperate reasonably with Contractor and parties shall be entitled, in connection with any such litigation, to be represented by counsel at their own expense.**

3.4.3 The provisions of this indemnification are solely for the benefit of the parties hereto and not intended to create or grant any rights, contractual or otherwise, to any other person or entity.

3.4.4 Contractor shall promptly advise Owner in writing of any claim or demand against Owner or against Contractor which involves Owner and known to Contractor and related to or arising out of Contractor's activities under this Contract.

3.4.5 These indemnity provisions shall survive the termination of this Agreement regardless of the reason for termination.

Article 4. Historically Underutilized Business (HUB) Subcontracting Plan

4.1 General Description. The purpose of the Historically Underutilized Business (HUB) program is to promote equal business opportunities for economically disadvantaged persons (as defined by Tex. Gov't Code, Chapter 2161) to contract with the State of Texas in accordance with the goals specified in the State of Texas Disparity Study. The HUB program annual procurement utilization goals are defined in 34 T.A.C. § 20.13(b).

4.1.1 State agencies are required by statute to make a good faith effort to assist HUBs in participating

in contract awards issued by the State. 34 T.A.C. § 20.13(b) outlines the State's policy to encourage the utilization of HUBs in State contracting opportunities through race, ethnic and gender neutral means.

4.1.2 A Contractor who contracts with the State in an amount of $100,000 or greater is required to make a good faith effort to award subcontracts to HUBs in accordance with 34 T.A.C. § 20.14(a)(2)(A) by submitting a HUB subcontracting plan within twenty-four (24) hours after the bid or response is due and complying with the HUB subcontracting plan after it is accepted by Owner and during the term of the Contract.

4.2 Compliance with Approved HUB Subcontracting Plan. Contractor, having been awarded this Contract in part by complying with the HUB program statute and rules, hereby covenants to continue to comply with the HUB program as follows:

4.2.1 Prior to adding or substituting a Subcontractor, promptly notify Owner in the event a change is required for any reason to the accepted HUB subcontracting plan.

4.2.2 Conduct the good-faith effort activities required and provide Owner with necessary documentation to justify approval of a change to the approved HUB subcontracting plan.

4.2.3 Cooperate in the execution of a Change Order or such other approval of the change in the HUB subcontracting plans as Contractor and Owner may agree to.

4.2.4 Maintain and make available to Owner upon request business records documenting compliance with the accepted HUB subcontracting plan.

4.2.5 Upon receipt of payment for performance of Work, submit to Owner a compliance report, in the format required by Owner that demonstrates Contractor's performance of the HUB subcontracting plan.

4.2.5.1 Progress Assessment Report (PAR): monthly compliance reports to Owner (contracting agency), verifying their compliance with the HUB subcontracting plan, including the use/expenditures they have made to Subcontractors. (The PAR is available at **http://www.window.state.tx.us/procurement/prog/hub/hub-forms/progressassessmentrpt.xls**).

4.2.6 Promptly and accurately explain and provide supplemental information to Owner to assist in Owner's investigation of Contractor's good-faith effort to fulfill the HUB subcontracting plan and the requirements under 34 T.A.C. § 20.14(a)(1).

4.3 Failure to Demonstrate Good-Faith Effort. Upon a determination by Owner that Contractor has failed to demonstrate a good-faith effort to fulfill the HUB subcontracting plan or any Contract covenant detailed above, Owner may, in addition to all other remedies available to it, report the failure to perform to the Comptroller of Public Accounts, Texas Procurement and Support Services Division, Historically Underutilized Business Program and may bar Contractor from future contracting opportunities with Owner.

Article 5. Bonds and Insurance

5.1 Construction Bonds. Contractor is required to tender to Owner, prior to commencing the Work, performance and payment bonds, as required by Tex. Gov't Code, Chapter 2253. On Construction Manager-at-Risk and Design-Build Projects the Owner shall require a security bond, as described in Subsection 5.1.2 below.

5.1.1 Bond Requirements. Each bond shall be executed by a corporate surety or sureties authorized to do business in the State of Texas and acceptable to Owner, on Owner's form, and in

compliance with the relevant provisions of the Texas Insurance Code. If any bond is for more than ten (10) percent of the surety's capital and surplus, Owner may require certification that the company has reinsured the excess portion with one or more reinsurers authorized to do business in the State. A reinsurer may not reinsure for more than ten (10) percent of its capital and surplus. If a surety upon a bond loses its authority to do business in the State, Contractor shall, within thirty (30) days after such loss, furnish a replacement bond at no added cost to Owner.

5.1.1.1 A Performance bond is required if the Contract Sum is in excess of $100,000. The performance bond is solely for the protection of Owner. The performance bond is to be for the Contract Sum to guarantee the faithful performance of the Work in accordance with the Contract Documents. The form of the bond shall be approved by the Office of the Attorney General of Texas. The performance bond shall be effective through Contractor's warranty period.

5.1.1.2 A Payment bond is required if the Contract price is in excess of $25,000. The payment bond is to be for the Contract Sum and is payable to Owner solely for the protection and use of payment bond beneficiaries. The form of the bond shall be approved by the Office of the Attorney General of Texas.

5.1.2 Security Bond. The security bond provides protection to Owner if Contractor presents an acceptable guaranteed maximum price ("GMP") to Owner but is unable to deliver the required payment and performance bonds within the time period stated below.

5.1.3 When Bonds Are Due

5.1.3.1 Security bonds are due before execution of a Construction Manager-at-Risk or Design-Build Contract.

5.1.3.2 Payment and performance bonds are due before execution of a contract on competitively bid or competitively sealed proposal projects or before execution of a GMP proposal on Construction Manager-at-Risk projects or Design-Build projects.

5.1.4 Power of Attorney. Each bond shall be accompanied by a valid power of attorney (issued by the surety company and attached, signed and sealed with the corporate embossed seal, to the bond) authorizing the attorney-in-fact who signs the bond to commit the company to the terms of the bond, and stating any limit in the amount for which the attorney can issue a single bond.

5.1.5 Bond Indemnification. The process of requiring and accepting bonds and making claims thereunder shall be conducted in compliance with Tex. Gov't Code, Chapter 2253. IF FOR ANY REASON A STATUTORY PAYMENT OR PERFORMANCE BOND IS NOT HONORED BY THE SURETY, CONTRACTOR SHALL FULLY INDEMNIFY AND HOLD OWNER HARMLESS OF AND FROM ANY COSTS, LOSSES, OBLIGATIONS OR LIABILITIES IT INCURS AS A RESULT.

5.1.6 Furnishing Bond Information. Owner shall furnish certified copies of the payment bond and the related Contract to any qualified person seeking copies who complies with Tex. Gov't Code § 2253.026.

5.1.7 Claims on Payment Bonds. Claims on payment bonds must be sent directly to Contractor and his surety in accordance with Tex. Gov't Code § 2253.041. All payment bond claimants are cautioned that no lien exists on the funds unpaid to Contractor on such Contract, and that reliance on notices sent to Owner may result in loss of their rights against Contractor and/or his surety. Owner is not responsible in any manner to a claimant for collection of unpaid bills, and accepts no such responsibility because of any representation by any agent or employee.

5.1.8 Payment Claims when Payment Bond not Required. The rights of Subcontractors regarding payment are governed by Tex. Prop. Code §§ 53.231 – 53.239 when the value of the Contract between Owner and Contractor is less than $25,000.00. These provisions set out the requirements for filing a valid lien on funds unpaid to Contractor as of the time of filing the claim, actions necessary to release the lien and satisfaction of such claim.

5.1.9 Sureties. A surety shall be listed on the US Department of the Treasury's Listing of Approved Sureties maintained by the Bureau of Financial Management Service (FMS), www.fms.treas.gov/c570, stating companies holding Certificates of Authority as acceptable sureties on Federal bonds and acceptable reinsuring companies (FMS Circular 570).

5.2 Insurance Requirements. Contractor shall carry insurance in the types and amounts indicated in this Article for the duration of the Contract. The required insurance shall include coverage for Owner's property prior to construction, during construction and during the warranty period. The insurance shall be evidenced by delivery to Owner of certificates of insurance executed by the insurer or its authorized agent stating coverages, limits, expiration dates and compliance with all applicable required provisions. Upon request, Owner, and/or its agents, shall be entitled to receive without expense, copies of the policies and all endorsements. Contractor shall update all expired policies prior to submission for monthly payment. Failure to update policies shall be reason for withholding of payment until renewal is provided to Owner.

5.2.1 Contractor, consistent with its status as an independent contractor, shall provide and maintain all insurance coverage with the minimum amounts described below until the end of the warranty period unless otherwise stated in Owner's Special Conditions. Failure to maintain insurance coverage, as required, is grounds for suspension of Work for cause pursuant to Article 14. The Contractor will be notified of the date on which the Builder's Risk insurance policy may be terminated by any means deemed appropriate by Owner.

5.2.2 Coverage shall be written on an occurrence basis by companies authorized and admitted to do business in the State of Texas and rated A-, VII or better by A.M. Best Company or similar rating company or otherwise acceptable to Owner.

5.2.2.1 Insurance Coverage Required.

5.2.2.1.1 Workers' Compensation. Insurance with limits as required by the Texas Workers' Compensation Act and Employer's Liability Insurance with limits of not less than:

$1,000,000 each accident;

$1,000,000 disease each employee; and

$1,000,000 disease policy limit.

Policies must include (a) Other States Endorsement to include TEXAS if business is domiciled outside the State of Texas, and (b) a waiver of all rights of subrogation in favor of Owner.

5.2.2.1.2 Commercial General Liability Insurance, including premises, operations, independent contractor's liability, products and completed operations and contractual liability, covering, but not limited to, the liability assumed under the indemnification provisions of this Contract, fully insuring Contractor's (or Subcontractor's) liability for bodily injury (including death) and property damage with a minimum limit of:

$1,000,000 per occurrence;

$2,000,000 general aggregate;

$2,000,000 products and completed operations aggregate; and

Coverage shall be on an "occurrence" basis.

The policy shall include coverage extended to apply to completed operations and explosion, collapse, and underground hazards. The policy shall include endorsement CG2503 Amendment of Aggregate Limits of Insurance (per Project) or its equivalent.

If the Work involves any activities within fifty (50) feet of any railroad, railroad protective insurance as may be required by the affected railroad, written for not less than the limits required by such railroad.

5.2.2.1.3 Asbestos Abatement Liability Insurance, including coverage for liability arising from the encapsulation, removal, handling, storage, transportation, and disposal of asbestos containing materials. *This requirement applies if the Work or the Project includes asbestos containing materials.

The combined single limit for bodily injury and property damage will be a minimum of $1,000,000 per occurrence.

*Specific requirement for claims-made form: Required period of coverage will be determined by the following formula: continuous coverage for life of the Contract, plus one (1) year (to provide coverage for the warranty period), and an extended discovery period for a minimum of five (5) years which shall begin at the end of the warranty period.

Employer's liability limits for asbestos abatement will be:

$1,000,000 each accident;

$1,000,000 disease each employee; and

$1,000,000 disease policy limit.

If this Contract is for asbestos abatement only, the All-Risk Builder's Risk or all-risk installation floater (5.2.2.1.5.e) is not required.

5.2.2.1.4 Business Automobile Liability Insurance, covering all owned, hired, and non-owned vehicles, with a minimum combined single limit for bodily injury (including death) and property damage of $1,000,000 per occurrence. No aggregate shall be permitted for this type of coverage.

Such insurance is to include coverage for loading and unloading hazards.

Contractor or any subcontractor responsible for transporting asbestos or other hazardous materials defined as asbestos shall provide

pollution coverage for any vehicle hauling asbestos containing cargo. The policy must include a MCS 90 endorsement with a $5,000,000 limit and the CA 9948 Pollution Endorsement, or its equivalent.

5.2.2.1.5 All-Risk Builder's Risk Insurance, if applicable (or all-risk installation floater for instances in which the project involves solely the installation of material and/or equipment). Coverage is determined by the Contract Sum, as detailed, below.

BUILDERS RISK REQUIREMENT FOR PROJECTS WITH A CONTRACT SUM <$20 MILLION

5.2.2.1.5.1 Contractor shall purchase and maintain in force builders risk insurance on the entire Work. Such insurance shall be written in the amount of the original contract, plus any subsequent change orders and plus the cost of materials supplied or installed by others, comprising Total Value for the entire Project at the site. The insurance shall apply on a replacement cost basis with no coinsurance provision. A sublimit may be applicable to flood coverage, but sublimit must be at least 20% of the Total Value of the Project. The limit for all other perils, including Named Windstorm, Wind, and Hail, must be equal to the Total Value for the entire Project at the site. (If Installation Floater, limit shall be equal to 100 percent of the contract cost.)

5.2.2.1.5.2 This insurance shall name as insureds the Owner, the Contractor, and all subcontractors and sub-subcontractors in the Work.

5.2.2.1.5.3 Builders risk insurance shall be on an "all risk" or equivalent policy form and shall include, without limitation, insurance against fire and extended coverage perils, theft, vandalism, malicious mischief, collapse, earthquake, flood, windstorm, boiler and machinery/mechanical breakdown, testing and startup, and terrorism.

5.2.2.1.5.4 This insurance shall cover the entire work at the site as required in 5.2.2.1.5.1, including, but not limited to, the following:

- Temporary works including but not limited to scaffolding, form work, fences, shoring, hoarding, falsework and temporary buildings
- Offsite Storage
- Portions of the work in transit
- Debris removal
- Extra Expense
- Expediting Expenses
- Demolition and Increased Cost of Construction
- Pollutant Clean-Up and Removal
- Trees, Shrubs, Plants, Lawns and Landscaping (if applicable)
- Errors & Omissions (applicable to purchase of Builders Risk policy only)

5.2.2.1.5.5 This insurance shall not contain an occupancy clause suspending or reducing coverage should the Owner occupy, or begin beneficial occupancy before the Owner has accepted final completion.

5.2.2.1.5.6 This insurance shall be specific as to coverage and shall be primary to any permanent insurance or self-insurance that may be maintained on the property by Owner.

5.2.2.1.5.7 This insurance shall include a waiver of subrogation in favor of Owner, the Contractor, and all subcontractors and sub-subcontractors in the work.

5.2.2.1.5.8 As applicable, Flood deductible shall not exceed $250,000 for Zone A, $100,000 for Zone B and $50,000 for all other Zones. For Tier 1 and Tier 2, Named Windstorm deductible shall not exceed 2% of the project values in place at the time of the loss.

5.2.2.1.5.9 Before the commencement of the work, Contractor shall provide to Owner an accurate certificate of insurance that provides specific evidence of all requirements outlined in Section 5.2.2.1.5. A copy of the policy itself shall be provided to Owner within 30 days after Notice to Proceed.

5.2.2.1.5.10 Refer to Owner's Special Conditions for possible additional Builders Risk insurance requirements.

BUILDERS RISK REQUIREMENT FOR PROJECTS WITH A CONTRACT SUM ≥$20 MILLION

5.2.2.1.5.1 Contractor shall purchase and maintain in force builders risk insurance on the entire Work. Such insurance shall be written in the amount of the original contract, plus any subsequent change orders and plus the cost of materials supplied or installed by others, comprising Total Value for the entire Project at the site. The insurance shall apply on a replacement cost basis with no coinsurance provision and shall include a margin clause of plus/minus 10% on project value. A sublimit may be applicable to flood coverage, but sublimit must be at least 20% of the Total Value of the Project. A sublimit of $50 million or the Total Value of the Project, whichever is less, is acceptable for Earthquake. The limit for all other perils, including Named Windstorm, Wind, and Hail, must be equal to the Total Value for the entire Project at the site. (If Installation Floater, limit shall be equal to 100 percent of the contract cost.)

5.2.2.1.5.2 This insurance shall name as insureds the Owner, the Contractor, and all subcontractors and sub-subcontractors in the Work.

5.2.2.1.5.3 Builders risk insurance shall be on an "all risk" or equivalent policy form and shall include, without limitation, insurance against fire and extended coverage perils, theft, vandalism, malicious mischief, collapse, earthquake, flood, windstorm, boiler and machinery/mechanical breakdown, testing and startup, and terrorism.

5.2.2.1.5.4 This insurance shall cover the entire work at the site as required in 5.2.2.1.5.1, including, but not limited to, the following:

Coverage	Minimum Limit Required
Temporary works including but not limited to scaffolding, form work, fences, shoring, hoarding, falsework and temporary buildings	$1 million
Offsite Storage	Sufficient to cover the anticipated maximum values stored offsite
Portions of the work in Transit	Sufficient to cover the anticipated maximum values in transit
Debris Removal	25% of Physical damage amount subject to maximum of $5 million or 25% of Total Value of Project whichever is higher
Expediting Expenses	$1 million
Extra Expense	$5 million
Demolition and Increased Cost of Construction	$2 million or 10% of Total Value of Project whichever is higher
Pollutant Clean-Up and Removal	$250,000
Trees, Shrubs, Plants, Lawns and Landscaping (if applicable)	$2,500 per item subject to a maximum of $1 million
Errors & Omissions (applicable to purchase of Builders Risk policy only)	$2.5 million

5.2.2.1.5.5 This insurance shall not contain an occupancy clause suspending or reducing coverage should the Owner occupy, or begin beneficial occupancy before the Owner has accepted final completion.

5.2.2.1.5.6 This insurance shall be specific as to coverage and shall be primary to any permanent insurance or self-insurance that may be maintained on the property by Owner.

5.2.2.1.5.7 This insurance shall include a waiver of subrogation in favor of Owner, the Contractor, and all subcontractors and sub-subcontractors in the work.

5.2.2.1.5.8 As applicable, Flood deductible shall not exceed $250,000 for Zone A, $100,000 for Zone B and $50,000 for all other Zones. For Tier 1 and Tier 2, Named Windstorm deductible shall not exceed 2% of the project values in place at the time of the loss.

5.2.2.1.5.9 Before the commencement of the work, Contractor shall provide to Owner an accurate certificate of insurance that provides specific evidence of all requirements outlined in Section 5.2.2.1.5. A copy of the policy itself shall be provided to Owner within 30 days after Notice to Proceed.

5.2.2.1.5.10 Refer to Owner's Special Conditions for possible additional Builders Risk insurance requirements.

5.2.2.1.6 "Umbrella" Liability Insurance. On Projects that are not insured under the Owner's Revolving Owner Controlled Insurance Program (ROCIP) or any project requiring demolition services, Contractor shall obtain, pay for and maintain umbrella liability insurance during the Contract term, insuring Contractor (or Subcontractor) that provides coverage at least as broad as and applies in excess and follows form of the primary liability coverages required above. The policy shall provide "drop down" coverage where underlying primary insurance coverage limits are insufficient or exhausted.

5.2.2.1.7 "Umbrella" Liability Insurance coverage shall be in the following amounts:

- If Contract sum is $1,000,000 or less:
  No Umbrella Required
- If Contract Sum is greater than $1,000,000 up to $3,000,000:
  $1,000,000 each occurrence and $2,000,000 annual aggregate
- If Contract Sum is greater than $3,000,000 up to $5,000,000:
  $5,000,000 each occurrence and $5,000,000 annual aggregate
- If Contract Sum is greater than $5,000,000:
  $10,000,000 each occurrence and $10,000,000 annual aggregate

5.2.3 All Policies must include the following clauses, as applicable:

5.2.3.1 Contractor must provide to Owner immediate notice of cancellation, material change, or non-renewal to any insurance coverages required herein above. This requirement may be satisfied by the Contractor providing a copy of the notice received by the insurer to Owner within two business days of date of receipt or by Endorsement of the policies that require Insurer to provide notice to Owner.

5.2.3.2 It is agreed that Contractor's insurance shall be deemed primary with respect to any insurance or self-insurance carried by Owner for liability arising out of operations under the Contract with Owner.

5.2.3.3 Owner, its officials, directors, employees, representatives, and volunteers are added as additional insureds as respects operations and activities of, or on behalf of the named insured performed under Contract with Owner. The additional insured status must cover completed operations as well. This is not applicable to workers' compensation policies.

5.2.3.4 A waiver of subrogation in favor of Owner shall be provided in all policies.

5.2.3.5 If Owner is damaged by the failure of Contractor (or Subcontractor) to maintain insurance as required herein and/or as further described in Owner's Special Conditions, then Contractor shall bear all reasonable costs properly attributable to that failure.

5.2.4 Without limiting any of the other obligations or liabilities of Contractor, Contractor shall require each Subcontractor performing work under the Contract, at Subcontractor's own expense, to maintain during the term of the Contract, the same stipulated minimum insurance including the required provisions and additional policy conditions as shown above. As an alternative, Contractor may include its Subcontractors as additional insureds on its own coverage as prescribed under these requirements. Contractor's certificate of insurance shall note in such event that Subcontractors are included as additional insureds and that Contractor agrees to provide workers' compensation for Subcontractors and their employees. Contractor shall obtain and monitor the certificates of insurance from each Subcontractor in order to assure compliance with the insurance requirements. Contractor must retain the certificates of insurance for the duration of the Contract plus five (5) years and shall have the responsibility of enforcing these insurance requirements among its Subcontractors. Owner shall be entitled, upon request and without expense, to receive copies of these certificates.

5.2.5 Workers' compensation insurance coverage must meet the statutory requirements of Tex. Lab. Code § 401.011(44) and specific to construction projects for public entities as required by Tex. Lab. Code § 406.096.

5.2.5.1 Definitions:

5.2.5.1.1 Certificate of coverage ("certificate")- A copy of a certificate of insurance, a certificate of authority to self-insure issued by the commission, or a coverage agreement (DWC-81, DWC-82, DWC-83, or DWC-84), showing statutory workers' compensation insurance coverage for the person's or entity's employees providing services on a project, for the duration of the project.

5.2.5.1.2 Duration of the project - includes the time from the beginning of the work on the project until the contractor's/person's work on the project has been completed and accepted by the governmental entity.

5.2.5.1.3 Persons providing services on the project ("subcontractor" in §406.096) – includes all persons or entities performing all or part of the services the contractor has undertaken to perform on the project, regardless of whether that person contracted directly with the contractor and regardless of whether that person has employees. This includes, without limitation, independent contractors, subcontractors, leasing companies, motor carriers, owner-operators, employees of any such entity, or employees of any entity which furnishes persons to provide services on the project. "Services" include, without limitation, providing, hauling, or delivering equipment or materials, or providing labor, transportation, or other service related to a project. "Services" does not include activities unrelated to the project, such as food/beverage vendors, office supply deliveries, and delivery of portable toilets.

5.2.5.2 The contractor shall provide coverage, based on proper reporting of classification codes and payroll amounts and filing of any coverage agreements, which meets the statutory requirements of Texas Labor Code, Section 401.011(44) for all employees of the contractor providing services on the project, for the duration of the project.

5.2.5.3 The Contractor must provide a certificate of coverage to the governmental entity prior to being awarded the contract.

5.2.5.4 If the coverage period shown on the contractor's current certificate of coverage ends during

the duration of the project, the contractor must, prior to the end of the coverage period, file a new certificate of coverage with the governmental entity showing that coverage has been extended.

5.2.5.5 The contractor shall obtain from each person providing services on a project, and provide to the governmental entity:

(1) a certificate of coverage, prior to that person beginning work on the project, so the governmental entity will have on file certificates of coverage showing coverage for all persons providing services on the project; and

(2) no later than seven days after receipt by the contractor, a new certificate of coverage showing extension of coverage, if the coverage period shown on the current certificate of coverage ends during the duration of the project.

5.2.5.6 The contractor shall retain all required certificates of coverage for the duration of the project and for one year thereafter.

5.2.5.7 The contractor shall notify the governmental entity in writing by certified mail or personal delivery, within 10 days after the contractor knew or should have known, of any change that materially affects the provision of coverage of any person providing services on the project.

5.2.5.8 The contractor shall post on each project site a notice, in the text, form and manner prescribed by the Texas Depart of Insurance Division of Workers' Compensation, informing all persons providing services on the project that they are required to be covered, and stating how a person may verify coverage and report lack of coverage.

5.2.5.9 The contractor shall contractually require each person with whom it contracts to provide services on a project, to:

(1) provide coverage, based on proper reporting of classification codes and payroll amounts and filing of any coverage agreements, which meets the statutory requirements of Texas Labor Code, Section 401.011(44) for all of its employees providing services on the project, for the duration of the project;

(2) provide to the contractor, prior to that person beginning work on the project, a certificate of coverage showing that coverage is being provided for all employees of the person providing services on the project, for the duration of the project;

(3) provide the contractor, prior to the end of the coverage period, a new certificate of coverage showing extension of coverage, if the coverage period shown on the current certificate of coverage ends during the duration of the project;

(4) obtain from each other person with whom it contracts, and provide to the contractor:

(a) a certificate of coverage, prior to the other person beginning work on the project; and

(b) a new certificate of coverage showing extension of coverage, prior to the end of the coverage period, if the coverage period shown on the current certificate of coverage ends during the duration of the project;

(5) retain all required certificates of coverage on file for the duration of the project and for one year thereafter;

(6) notify the governmental entity in writing by certified mail or personal delivery, within 10 days after the person knew or should have known, of any change that materially affects the provision of coverage of any person providing services on the project; and

(7) contractually require each person with whom it contracts, to perform as required by paragraphs (1) - (7), with the certificates of coverage to be provided to the person for whom they are providing services.

5.2.5.10 By signing this contract or providing or causing to be provided a certificate of coverage, the contractor is representing to the governmental entity that all employees of the contractor who will provide services on the project will be covered by workers' compensation coverage for the duration of the project, that the coverage will be based on proper reporting of classification codes and payroll amounts, and that all coverage agreements will be filed with the appropriate insurance carrier or, in the case of a self-insured, with the commission's Division of Self-Insurance Regulation. Providing false or misleading information may subject the contractor to administrative penalties, criminal penalties, civil penalties, or other civil actions.

5.2.5.11 The contractor's failure to comply with any of these provisions is a breach of contract by the contractor which entitles the governmental entity to declare the contract void if the contractor does not remedy the breach within ten days after receipt of notice of breach from the governmental entity.

Article 6. Construction Documents, Coordination Documents, and Record Documents

6.1 Drawings and Specifications.

6.1.1 Copies Furnished. Contractor will be furnished, free of charge, the number of complete sets of the Drawings, Specifications, and addenda as provided in the Agreement or the Owner's Special Conditions. Additional complete sets of Drawings and Specifications, if requested, will be furnished at reproduction cost to the entity requesting such additional sets. Electronic copies of such documents will be provided to Contractor without charge.

6.1.2 Ownership of Drawings and Specifications. All Drawings, Specifications and copies thereof furnished by A/E are to remain A/E's property. These documents are not to be used on any other project, and with the exception of the Contract record set and electronic versions needed for warranty operations, are to be returned to the A/E, upon request, following completion of the Work.

6.1.3 Interrelation of Documents. The Contract Documents as referenced in the Contract between Owner and Contractor are complementary, and what is required by one shall be as binding as if required by all.

6.1.4 Resolution of Conflicts in Documents. Where conflicts may exist within the Contract Documents, the documents shall govern in the following order: (a) Change Orders, addenda, and written amendments to the Contract; (b) the Contract; (c) Drawings; (d) Specifications (but Specifications shall control over Drawings as to quality of materials and installation); and (e) other Contract Documents. Among other categories of documents having the same order of precedence, the term or provision that includes the latest date shall control. Contractor shall notify A/E and ODR for resolution of the issue prior to executing the Work in question.

6.1.5 Contractor's Duty to Review Contract Documents. In order to facilitate its responsibilities for completion of the Work in accordance with and as reasonably inferable from the Contract Documents, prior to commencing the Work, Contractor shall examine and compare the Contract

Documents, information furnished by Owner, relevant field measurements made by Contractor and any visible or reasonably anticipated conditions at the Site affecting the Work. This duty extends throughout the construction phase prior to commencing each particular work activity and/or system installation.

6.1.6 Discrepancies and Omissions in Drawings and Specifications.

6.1.6.1 Promptly report to ODR and to A/E the discovery of any apparent error, omission or inconsistency in the Contract Documents prior to execution of the Work.

6.1.6.2 It is recognized that Contractor is not acting in the capacity of a licensed design professional, unless it is performing as a Design-Build firm.

6.1.6.3 It is further recognized that Contractor's examination of Contract Documents is to facilitate construction and does not create an affirmative responsibility to detect errors, omissions or inconsistencies or to ascertain compliance with applicable laws, building codes or regulations, unless it is performing as a Design-Build firm or a Construction Manager-at-Risk.

6.1.6.4 When performing as a Design-Build firm, Contractor has sole responsibility for discrepancies, errors, and omissions in the Drawings and Specifications.

6.1.6.5 When performing as a Construction Manager-at-Risk, Contractor has a shared responsibility with A/E for discovery and resolution of discrepancies, errors, and omissions in the Contract Documents. In such case, Contractor's responsibility pertains to review, coordination, and recommendation of resolution strategies within budget constraints.

6.1.6.6 Contractor has no liability for errors, omissions, or inconsistencies unless Contractor knowingly failed to report a recognized problem to Owner or the Work is executed under a Design-Build or Construction Manager-at-Risk Contract as outlined above. Should Contractor fail to perform the examination and reporting obligations of these provisions, Contractor is responsible for avoidable costs and direct and/or consequential damages.

6.1.6.7 Owner does not warrant or make any representations as to the accuracy, suitability or completeness of any information furnished to Contractor by Owner or it representatives.

6.2 Requirements for Record Documents. Contractor shall:

6.2.1 Maintain at the Site one copy of all Drawings, Specifications, addenda, approved submittals, Contract modifications, and all Project correspondence. Keep current and maintain Drawings and Specifications in good order with postings and markings to record actual conditions of Work and show and reference all changes made during construction. Provide Owner and A/E access to these documents.

6.2.2 Maintain the Record Documents which reflect the actual field conditions and representations of the Work performed, whether it be directed by addendum, Change Order or otherwise. Make available the Record Documents and all records prescribed herein for reference and examination by Owner and its representatives and agents.

6.2.3 Update the Record Documents at least monthly prior to submission of periodic partial pay estimates. Failure to maintain current Record Documents constitutes cause for denial of a progress payment otherwise due.

6.2.4 Prior to requesting Substantial Completion inspection Contractor shall furnish a copy of its marked-up Record Documents and a preliminary copy of each instructional manual, maintenance and operating manual, parts catalog, wiring diagrams, spare parts, specified written warranties and like publications, or parts for all installed equipment, systems, and like items and as described in the Contract Documents.

6.2.5 Once determined acceptable by ODR with input from A/E, provide one (1) reproducible copy and one (1) electronic media copy in a format acceptable to the ODR `of all Record Documents, unless otherwise required by the Owner's Special Conditions.

6.2.6 Contractor shall be responsible for updating the Record Documents for all Contractor initiated documents and changes to the Contract Documents due to coordination and actual field conditions, including RFIs.

6.2.7 A/E shall be responsible for updating the Record Documents for any addenda, Change Orders, A/E supplemental instructions and any other alterations to the Contract Documents generated by A/E or Owner.

Article 7. Construction Safety

7.1 General. It is the duty and responsibility of Contractor and all of its Subcontractors to be familiar with, enforce and comply with all requirements of Public Law No. 91-596, 29 U.S.C. § 651 et. seq., the Occupational Safety and Health Act of 1970, (OSHA) and all amendments thereto. Contractor shall prepare a safety plan specific to the Project and submit it to ODR and A/E prior to commencing Work. In addition, Contractor and all of its Subcontractors shall comply with all applicable laws and regulations of any public body having jurisdiction for safety of persons or property to protect them from damage, injury or loss and erect and maintain all necessary safeguards for such safety and protection.

7.2 Notices. Contractor shall provide notices as follows:

7.2.1 Notify owners of adjacent property including those that own or operate utility services and/or underground facilities, and utility owners, when prosecution of the Work may affect them or their facilities, and cooperate with them in the protection, removal, relocation and replacement, and access to their facilities and/or utilities.

7.2.2 Coordinate the exchange of material safety data sheets (MSDSs) or other hazard communication information required to be made available to or exchanged between or among employers at the site in connection with laws and regulations. Maintain a complete file of MSDSs for all materials in use on site throughout the construction phase and make such file available to Owner and its agents as requested.

7.3 Emergencies. In any emergency affecting the safety of persons or property, Contractor shall act to minimize, mitigate, and prevent threatened damage, injury or loss.

7.3.1 Have authorized agents of Contractor respond immediately upon call at any time of day or night when circumstances warrant the presence of Contractor to protect the Work or adjacent property from damage or to take such action pertaining to the Work as may be necessary to provide for the safety of the public.

7.3.2 Give ODR and A/E prompt notice of all such events.

7.3.3 If Contractor believes that any changes in the Work or variations from Contract Documents have been caused by its emergency response, promptly notify Owner within seventy-two (72) hours of the emergency response event.

7.3.4 Should Contractor fail to respond, Owner is authorized to direct other forces to take action as necessary and Owner may deduct any cost of remedial action from funds otherwise due Contractor.

7.4 Injuries. In the event of an incident or accident involving outside medical care for an individual on or near the Work, Contractor shall notify ODR and other parties as may be directed promptly, but no later than twenty-four (24) hours after Contractor learns that an event required medical care.

7.4.1 Record the location of the event and the circumstances surrounding it, by using photography or other means, and gather witness statements and other documentation which describes the event.

7.4.2 Supply ODR and A/E with an incident report no later than thirty-six (36) hours after the occurrence of the event. In the event of a catastrophic incident (one (1) fatality or three (3) workers hospitalized), barricade and leave intact the scene of the incident until all investigations are complete. A full set of incident investigation documents, including facts, finding of cause, and remedial plans shall be provided within one (1) week after occurrence, unless otherwise directed by legal counsel. Contractor shall provide ODR with written notification within one week of such catastrophic event if legal counsel delays submission of full report.

7.5 Environmental Safety. Upon encountering any previously unknown potentially hazardous material, or other materials potentially contaminated by hazardous material, Contractor shall immediately stop work activities impacted by the discovery, secure the affected area, and notify ODR immediately.

7.5.1 Bind all Subcontractors to the same duty.

7.5.2 Upon receiving such notice, ODR will promptly engage qualified experts to make such investigations and conduct such tests as may be reasonably necessary to determine the existence or extent of any environmental hazard. Upon completion of this investigation, ODR will issue a written report to Contractor identifying the material(s) found and indicate any necessary steps to be taken to treat, handle, transport or dispose of the material.

7.5.3 Owner may hire third-party contractors to perform any or all such steps.

7.5.4 Should compliance with ODR's instructions result in an increase in Contractor's cost of performance, or delay the Work, Owner will make an equitable adjustment to the Contract Sum and/or the time of completion, and modify the Contract in writing accordingly.

7.6 Trenching Plan. When the project requires excavation which either exceeds a depth of four (4) feet, or results in any worker's upper body being positioned below grade level, Contractor is required to submit a trenching plan to ODR prior to commencing trenching operations unless an engineered plan is part of the Contract Documents. The plan is required to be prepared and sealed by a professional engineer registered in the State of Texas, and hired or employed by Contractor or Subcontractor to perform the work. Said engineer cannot be anyone who is otherwise either directly or indirectly engaged on this project.

Article 8. Quality Control

8.1 Materials & Workmanship. Contractor shall execute Work in a good and workmanlike matter in accordance with the Contract Documents. Contractor shall develop and provide a quality control plan specific to this Project and acceptable to Owner. Where Contract Documents do not specify quality standards, complete and construct all Work in compliance with generally accepted construction industry standards. Unless otherwise specified, incorporate all new materials and equipment into the Work under the Contract.

8.2 Testing.

8.2.1 Owner is responsible for coordinating and paying for routine and special tests required to confirm compliance with quality and performance requirements, except as stated below or otherwise required by the Contract Documents.

8.2.2 Contractor shall provide the following testing as well as any other testing required of Contractor by the Specifications:

8.2. 2.1 Any test of basic material or fabricated equipment included as part of a submittal for a required item in order to establish compliance with the Contract Documents.

8.2. 2.2 Any test of basic material or fabricated equipment offered as a substitute for a specified item on which a test may be required in order to establish compliance with the Contract Documents.

8.2. 2.3 Preliminary, start-up, pre-functional and operational testing of building equipment and systems as necessary to confirm operational compliance with requirements of the Contract Documents.

8.2. 2.4 All subsequent tests on original or replaced materials conducted as a result of prior testing failure.

8.2. 3 All testing shall be performed in accordance with standard test procedures by an accredited laboratory, or special consultant as appropriate, acceptable to Owner. Results of all tests shall be provided promptly to ODR, A/E, and Contractor.

8.2. 4 Non-Compliance (Test Results). Should any of the tests indicate that a material and/or system does not comply with the Contract requirements, the burden of proof remains with Contractor, subject to:

8.2. 4.1 Contractor selection and submission of the laboratory for Owner acceptance.

8.2. 4.2 Acceptance by Owner of the quality and nature of tests.

8.2. 4.3 All tests taken in the presence of A/E and/or ODR, or their representatives.

8.2. 4.4 If tests confirm that the material/systems comply with Contract Documents, Owner will pay the cost of the test.

8.2. 4.5 If tests reveal noncompliance, Contractor will pay those laboratory fees and costs of that particular test and all future tests, of that failing Work, necessary to eventually confirm compliance with Contract Documents.

8.2. 4.6 Proof of noncompliance with the Contract Documents will make Contractor liable for any corrective action which ODR determines appropriate, including complete removal and replacement of non-compliant work or material.

8.2. 5 Notice of Testing. Contractor shall give ODR and A/E timely notice of its readiness and the date arranged so ODR and A/E may observe such inspection, testing, or approval.

8.2. 6 Test Samples. Contractor is responsible for providing Samples of sufficient size for test purposes and for coordinating such tests with their Work Progress Schedule to avoid delay.

8.2. 7 Covering Up Work. If Contractor covers up any Work without providing Owner an opportunity to inspect, Contractor shall, if requested by ODR, uncover and recover the work at Contractor's expense.

8.3 Submittals.

8.3.1 Contractor's Submittals. Contractor shall submit with reasonable promptness consistent with the Project schedule and in orderly sequence all Shop Drawings, Samples, or other information required by the Contract Documents, or subsequently required by Change Order. Prior to submitting, Contractor shall review each submittal for general compliance with Contract Documents and approve submittals for review by A/E and Owner by an approval stamp affixed to each copy. Submittal data presented without Contractor's stamp of approval will be returned without review or comment. Any delay resulting from Contractor's failure to certify approval of the Submittal is Contractor's responsibility.

8.3.1.1 Contractor shall within twenty-one (21) days of the effective date of the Notice To Proceed with construction, submit to ODR and A/E, a submittal schedule/register, organized by specification section, listing all items to be furnished for review and approval by A/E and Owner. The list shall include Shop Drawings, manufacturer's literature, certificates of compliance, materials Samples, materials colors, guarantees, and all other items identified throughout the Specifications.

8.3.1.2 Contractor shall indicate the type of item, Contract requirements reference, and Contractor's scheduled dates for submitting the item along with the requested dates for approval answers from A/E and Owner. The submittal register shall indicate the projected dates for procurement of all included items and shall be updated at least monthly with actual approval and procurement dates. Contractor's Submittal Register must be reasonable in terms of the review time for complex submittals. Contractor's submittal schedule must be consistent with the Work Progress Schedule and identify critical submittals. Show and allow a minimum of fifteen (15) days duration after receipt by A/E and ODR for review and approval. If re-submittal required, allow a minimum of an additional fifteen (15) days for review. Submit the updated Submittal Register with each request for progress payment. Owner may establish routine review procedures and schedules for submittals at the preconstruction conference and/or elsewhere in the Contract Documents. If Contractor fails to update and provide the Submittal Register as required, Owner may, after seven (7) days notice to Contractor withhold a reasonable sum of money that would otherwise be due Contractor.

8.3.1.3 Contractor shall coordinate the Submittal Register with the Work Progress Schedule. Do not schedule Work requiring a submittal to begin prior to scheduling review and approval of the related submittal. Revise and/or update both schedules monthly to ensure consistency and current project data. Provide to ODR the updated Submittal Register and schedule with each application for progress payment. Refer to requirements for the Work Progress Schedule for inclusion of procurement activities therein. Regardless, the Submittal Register shall identify dates submitted and returned and shall be used to confirm status and disposition of particular items submitted, including approval or other action taken and other information not conveniently tracked through the Work Progress Schedule.

8.3.1.4 By submitting Shop Drawings, Samples or other required information, Contractor represents that it has determined and verified all applicable field measurements, field construction criteria, materials, catalog numbers and similar data; and has checked and coordinated each Shop Drawing and Sample with the requirements of the Work and the Contract Documents.

8.3.2 Review of Submittals. A/E and ODR review is only for conformance with the design concept and the information provided in the Contract Documents. Responses to submittals will be in writing. The approval of a separate item does not indicate approval of an assembly in which

the item functions. The approval of a submittal does not relieve Contractor of responsibility for any deviation from the requirements of the Contract unless Contractor informs A/E and ODR of such deviation in a clear, conspicuous, and written manner on the submittal transmittal and at the time of submission, and obtains Owner's written specific approval of the particular deviation.

8.3.3 Correction and Resubmission. Contractor shall make any corrections required to a submittal and resubmit the required number of corrected copies promptly so as to avoid delay, until submittal approval. Direct attention in writing to A/E and ODR, when applicable, to any new revisions other than the corrections requested on previous submissions.

8.3.4 Limits on Shop Drawing Review. Contractor shall not commence any Work requiring a submittal until review of the submittal under Subsection 8.3.2. Construct all such work in accordance with reviewed submittals. Comments incorporated as part of the review in Subsection 8.3.2 of Shop Drawings and Samples is not authorization to Contractor to perform extra work or changed work unless authorized through a Change Order. A/E's and ODR's review, if any, does not relieve Contractor from responsibility for defects in the Work resulting from errors or omissions of any kind on the submittal, regardless of any approval action.

8.3.5 No Substitutions Without Approval. ODR and A/E may receive and consider Contractor's request for substitution when Contractor agrees to reimburse Owner for review costs and satisfies the requirements of this section. If Contractor does not satisfy these conditions, ODR and A/E will return the request without action except to record noncompliance with these requirements. Owner will not consider the request if Contractor cannot provide the product or method because of failure to pursue the Work promptly or coordinate activities properly. Contractor's request for a substitution may be considered by ODR and A/E when:

8.3.5.1 The Contract Documents do not require extensive revisions; and

8.3.5.2 Proposed changes are in keeping with the general intent of the Contract Documents and the design intent of A/E and do not result in an increase in cost to Owner; and

8.3.5.3 The request is timely, fully documented, properly submitted and one or more of the following apply:

8.3.5.3.1 Contractor cannot provide the specified product, assembly or method of construction within the Contract Time;

8.3.5.3.2 The request directly relates to an "or-equal" clause or similar language in the Contract Documents;

8.3.5.3.3 The request directly relates to a "product design standard" or "performance standard" clause in the Contract Documents;

8.3.5.3.4 The requested substitution offers Owner a substantial advantage in cost, time, energy conservation or other considerations, after deducting additional responsibilities Owner must assume;

8.3.5.3.5 The specified product or method of construction cannot receive necessary approval by an authority having jurisdiction, and ODR can approve the requested substitution;

8.3.5.3.6 Contractor cannot provide the specified product, assembly or method of construction in a manner that is compatible with other materials and where Contractor certifies that the substitution will overcome the incompatibility;

8.3.5.3.7 Contractor cannot coordinate the specified product, assembly or method of construction with other materials and where Contractor certifies they can coordinate the proposed substitution; or

8.3.5.3.8 The specified product, assembly or method of construction cannot provide a warranty required by the Contract Documents and where Contractor certifies that the proposed substitution provides the required warranty.

8.3.6 Unauthorized Substitutions at Contractor's Risk. Contractor is financially responsible for any additional costs or delays resulting from unauthorized substitution of materials, equipment or fixtures other than those specified. Contractor shall reimburse Owner for any increased design or contract administration costs resulting from such unauthorized substitutions.

8.4 Field Mock-up.

8.4.1 Mock-ups shall be constructed prior to commencement of a specified scope of work to confirm acceptable workmanship.

8.4.1.1 As a minimum, field mock-ups shall be constructed for roofing systems, exterior veneer / finish systems, glazing systems, and any other Work requiring a mock-up as identified throughout the Contract Documents. Mock-ups for systems not part of the Project scope shall not be required.

8.4.1.2 Mock-ups may be incorporated into the Work if allowed by the Contract Documents and if acceptable to ODR. If mock-ups are freestanding, they shall remain in place until otherwise directed by Owner.

8.4.1.3 Contractor shall include field mock-ups in their Work Progress Schedule and shall notify ODR and A/E of readiness for review sufficiently in advance to coordinate review without delay.

8.5 Inspection During Construction.

8.5.1 Contractor shall provide sufficient, safe, and proper facilities, including equipment as necessary for safe access, at all reasonable times for observation and/or inspection of the Work by Owner and its agents.

8.5.2 Contractor shall not cover up any Work with finishing materials or other building components prior to providing Owner and its agents an opportunity to perform an inspection of the Work.

8.5.2.1 Should corrections of the Work be required for approval, Contractor shall not cover up corrected Work until Owner indicates approval.

8.5.2.2 Contractor shall provide notification of at least five (5) working days or otherwise as mutually agreed, to ODR of the anticipated need for a cover-up inspection. Should ODR fail to make the necessary inspection within the agreed period, Contractor may proceed with cover-up Work, but is not relieved of responsibility for Work to comply with requirements of the Contract Documents.

Article 9. Construction Schedules

9.1 Contract Time. **TIME IS AN ESSENTIAL ELEMENT OF THE CONTRACT**. The Contract Time is the time between the dates indicated in the Notice to Proceed for commencement of the Work and for achieving Substantial Completion. The Contract Time can be modified only by Change Order. Failure

to achieve Substantial Completion within the Contract Time or as otherwise agreed to in writing will cause damage to Owner and may subject Contractor to liquidated damages as provided in the Contract Documents. If Contractor fails to achieve Final Completion in a reasonable time after Substantial Completion, Contractor shall be responsible for Owner's damages including, but not limited to, additional inspection, project management, and maintenance cost to the extent caused by Contractor's failure to achieve Final Completion.

9.2 Notice to Proceed. Owner will issue a Notice to Proceed which shall state the dates for beginning Work and for achieving Substantial Completion of the Work.

9.3 Work Progress Schedule. Refer to Owner's Special Conditions and Division 1 of the Specifications for additional schedule requirements. Unless indicated otherwise in those documents, Contractor shall submit their initial Work Progress Schedule for the Work in relation to the entire Project not later than twenty-one (21) calendar days after the effective date of the Notice to Proceed to ODR and A/E. Unless otherwise indicated in the Contract Documents, the Work Progress Schedule shall be computerized Critical Path Method (CPM) with fully editable logic. This initial schedule shall indicate the dates for starting and completing the various aspects required to complete the Work, including mobilization, procurement, installation, testing, inspection, delivery of Close-out Documents and acceptance of all the Work of the Contract. When acceptable to Owner, the initially accepted schedule shall be the Baseline Schedule for comparison to actual conditions throughout the Contract duration.
Note: This article pertains to construction phase schedules. Additional requirements for design phase scheduling for Construction Manager-at-Risk and Design-Build contracts are outlined in Division 1 Project Planning and Scheduling Specifications.

9.3.1 Schedule Requirements. Contractor shall submit electronic and paper copy of the initial Work Progress Schedule reflecting accurate and reliable representations of the planned progress of the Work, the Work to date if any, and of Contractor's actual plans for its completion. Contractor shall organize and provide adequate detail so the schedule is capable of measuring and forecasting the effect of delaying events on completed and uncompleted activities.

9.3.1.1 Contractor shall re-submit initial schedule as required to address review comments from A/E and ODR until such schedule is accepted as the Baseline Schedule.

9.3.1.2 Submittal of a schedule, schedule revision or schedule update constitutes Contractor's representation to Owner of the accurate depiction of all progress to date and that Contractor will follow the schedule as submitted in performing the Work.

9.3.2 Schedule Updates. Contractor shall update the Work Progress Schedule and the Submittal Register monthly, as a minimum, to reflect progress to date and current plans for completing the Work, while maintaining original schedule as Baseline Schedule and submit paper and electronic copies of the update to A/E and ODR as directed, but as a minimum with each request for payment. Owner has no duty to make progress payments unless accompanied by the updated Work Progress Schedule. Show the anticipated date of completion reflecting all extensions of time granted through Change Order as of the date of the update. Contractor may revise the Work Progress Schedule when in Contractor's judgment it becomes necessary for the management of the Work. Contractor shall identify all proposed changes to schedule logic to Owner and to A/E via an executive summary accompanying the updated schedule for review prior to final implementation of revisions into a revised Baseline Schedule. Schedule changes that materially impact Owner's operations shall be communicated promptly to ODR and shall not be incorporated into the revised Baseline Schedule without ODR's consent.

9.3.3 The Work Progress Schedule is for Contractor's use in managing the Work and submittal of the schedule, and successive updates or revisions, is for the information of Owner and to demonstrate that Contractor has complied with requirements for planning the Work. Owner's acceptance of a schedule, schedule update or revision constitutes Owner's agreement to coordinate its own activities with Contractor's activities as shown on the schedule.

9.3.3.1 Acceptance of the Work Progress Schedule, or update and/or revision thereto does not indicate any approval of Contractor's proposed sequences and duration.

9.3.3.2 Acceptance of a Work Progress Schedule update or revision indicating early or late completion does not constitute Owner's consent, alter the terms of the Contract, or waive either Contractor's responsibility for timely completion or Owner's right to damages for Contractor's failure to do so.

9.3.3.3 Contractor's scheduled dates for completion of any activity or the entire Work do not constitute a change in terms of the Contract. Change Orders are the only method of modifying the Substantial Completion Date(s) and Contract Time.

9.4 Ownership of Float. Unless indicated otherwise in the Contract Documents, Contractor shall develop its schedule, pricing, and execution plan to provide a minimum of ten (10) percent total float at acceptance of the Baseline Schedule. Float time contained in the Work Progress Schedule is not for the exclusive benefit of Contractor or Owner, but belongs to the Project and may be consumed by either party. Before Contractor uses any portion of the float Contractor must submit a written request to do so to the Owner and receive Owner's written authorization to use the float. Owner's approval shall not be unreasonably withheld.

9.5 Completion of Work. Contractor is accountable for completing the Work within the Contract Time stated in the Contract, or as otherwise amended by Change Order.

9.5.1 If, in the judgment of Owner, the work is behind schedule and the rate of placement of work is inadequate to regain scheduled progress to insure timely completion of the entire work or a separable portion thereof, Contractor, when so informed by Owner, shall immediately take action to increase the rate of work placement by:

9.5.1.1 An increase in working forces.

9.5.1.2 An increase in equipment or tools.

9.5.1.3 An increase in hours of work or number of shifts.

9.5.1.4 Expedite delivery of materials.

9.5.1.5 Other action proposed if acceptable to Owner.

9.5.2 Within ten (10) days after such notice from ODR, Contractor shall notify ODR in writing of the specific measures taken and/or planned to increase the rate of progress. Contactor shall include an estimate as to the date of scheduled progress recovery and an updated Work Progress Schedule illustrating Contractor's plan for achieving timely completion of the Project. Should ODR deem the plan of action inadequate, Contractor shall take additional steps or make adjustments as necessary to its plan of action until it meets with ODR's approval.

9.6 Modification of the Contract Time.

9.6.1 Delays and extension of time as hereinafter described are valid only if executed in accordance with provisions set forth in Article 11.

9.6.2 When a delay defined herein as excusable prevents Contractor from completing the Work within the Contract Time, Contractor is entitled to an extension of time. Owner will make an equitable adjustment and extend the number of days lost because of excusable delay or Weather Days, as measured by Contractor's progress schedule. All extensions of time will be granted in calendar days. In no event, however, will an extension of time be granted for delays that

merely extend the duration of non-critical activities, or which only consume float without delaying the project Substantial Completion date(s).

9.6.2.1 A "Weather Day" is a day on which Contractor's current schedule indicates Work is to be done, and on which inclement weather and related site conditions prevent Contractor from performing seven (7) hours of Work between the hours of 7:00 a.m. and 6:00 p.m. Weather days are excusable delays. When weather conditions at the site prevent work from proceeding, Contractor shall immediately notify ODR for confirmation of the conditions. At the end of each calendar month, Contractor shall submit to ODR and A/E a list of Weather Days occurring in that month along with documentation of the impact on critical activities. Based on confirmation by ODR, any time extension granted will be issued by Change Order. If Contractor and Owner cannot agree on the time extension, Owner may issue a ULCO for fair and reasonable time extension.

9.6.2.2 Excusable Delay. Contractor is entitled to an equitable adjustment of the Contract Time, issued via change order, for delays caused by the following:

9.6.2.2.1 Errors, omissions and imperfections in design, which A/E corrects by means of changes in the Drawings and Specifications.

9.6.2.2.2 Unanticipated physical conditions at the Site, which A/E corrects by means of changes to the Drawings and Specifications or for which ODR directs changes in the Work identified in the Contract Documents.

9.6.2.2.3 Changes in the Work that effect activities identified in Contractor's schedule as "critical" to completion of the entire Work, if such changes are ordered by ODR or recommended by A/E and ordered by ODR.

9.6.2.2.4 Suspension of Work for unexpected natural events (sometimes called "acts of God"), civil unrest, strikes or other events which are not within the reasonable control of Contractor.

9.6.2.2.5 Suspension of Work for convenience of ODR, which prevents Contractor from completing the Work within the Contract Time.

9.6.3 Contractor's relief in the event of such delays is the time impact to the critical path as determined by analysis of Contractor's schedule. In the event that Contractor incurs additional direct costs because of the excusable delays other than described in Subparagraph 9.6.2.2.4 and within the reasonable control of Owner, the Contract price and Contract Time are to be equitably adjusted by Owner pursuant to the provisions of Article 11.

9.7 No Damages for Delay. An extension of the Contract Time shall be the sole remedy of Contractor for delays in performance of the Work, whether or not such delays are foreseeable, except for delays caused solely by acts of Owner that constitute intentional interference with Contractor's performance of the Work and then only to the extent such acts continue after Contractor notifies Owner in writing of such interference. For delays caused by any act(s) other than the sole intentional interference of Owner, Contractor shall not be entitled to any compensation or recovery of any damages including, without limitation, consequential damages, lost opportunity costs, impact damages, loss of productivity, or other similar damages. Owner's exercise of any of its rights or remedies under the Contract including, without limitation, ordering changes in the Work or directing suspension, rescheduling, or correction of the Work, shall not be construed as intentional interference with Contractor's performance of the Work regardless of the extent or frequency of Owner's exercise of such rights or remedies.

9.8 Concurrent Delay. When the completion of the Work is simultaneously delayed by an excusable delay

and a delay arising from a cause not designated as excusable, Contractor may not be entitled to a time extension for the period of concurrent delay.

9.9 Other Time Extension Requests. Time extensions requested in association with changes to the Work directed or requested by Owner shall be included with Contractor's proposed costs for such change. Time extensions requested for inclement weather are covered by Paragraph 9.6.2.1 above. If Contractor believes that the completion of the Work is delayed by a circumstance other than for changes directed to the Work or weather, they shall give ODR written notice, stating the nature of the delay and the activities potentially affected, within five (5) days after the onset of the event or circumstance giving rise to the excusable delay. Contractor shall provide sufficient written evidence to document the delay. In the case of a continuing cause of delay, only one notice of claim is necessary. State claims for extensions of time in numbers of whole or half days.

9.9.1 Within ten (10) days after the cessation of the delay, Contractor shall formalize its request for extension of time in writing to include a full analysis of the schedule impact of the delay and substantiation of the excusable nature of the delay. All changes to the Contract Time or made as a result of such claims is by Change Order, as set forth in Article 11.

9.9.2 No extension of time releases Contractor or the Surety furnishing a performance or payment bond from any obligations under the Contract or such a bond. Those obligations remain in full force until the discharge of the Contract.

9.9.3 Contents of Time Extension Requests. Contractor shall provide with each Time Extension Request a quantitative demonstration of the impact of the delay on project completion time, based on the Work Progress Schedule. Contractor shall include with Time Extension Requests a reasonably detailed narrative setting forth:

9.9.3.1 The nature of the delay and its cause; the basis of Contractor's claim of entitlement to a time extension.

9.9.3.2 Documentation of the actual impacts of the claimed delay on the critical path indicated in Contractor's Work Progress Schedule, and any concurrent delays.

9.9.3.3 Description and documentation of steps taken by Contractor to mitigate the effect of the claimed delay, including, when appropriate, the modification of the Work Progress Schedule.

9.9.4 Owner's Response. Owner will respond to the Time Extension Request by providing to Contractor written notice of the number of days granted, if any, and giving its reason if this number differs from the number of days requested by Contractor.

9.9.4.1 Owner will not grant time extensions for delays that do not affect the Contract Substantial Completion date.

9.9.4.2 Owner will respond to each properly submitted Time Extension Request within fifteen (15) days following receipt. If Owner cannot reasonably make a determination about Contractor's entitlement to a time extension within that time, Owner will notify Contractor in writing. Unless otherwise agreed by Contractor, Owner has no more than fifteen (15) additional days to prepare a final response. If Owner fails to respond within forty-five (45) days from the date the Time Extension Request is received, Contractor's request for a time extension shall be deemed rejected by Owner.

9.10 Failure to Complete Work Within the Contract Time. **TIME IS AN ESSENTIAL ELEMENT OF THE CONTRACT.** Contractor's failure to substantially complete the Work within the Contract Time or to achieve Substantial Completion as required will cause damage to Owner. These damages may be

liquidated by agreement of Contractor and Owner, in the amount per day as set forth in the Contract Documents.

9.11 Liquidated Damages. Owner may collect liquidated damages due from Contractor directly or indirectly by reducing the Contract Sum in the amount of liquidated damages stated in the Agreement or the Owner's Special Conditions.

Article 10. Payments

10.1 Schedule of Values. Contractor shall submit to ODR and A/E for acceptance a Schedule of Values accurately itemizing material and labor for the various classifications of the Work based on the organization of the specification sections and of sufficient detail acceptable to ODR. The accepted Schedule of Values will be the basis for the progress payments under the Contract.

10.1.1 No progress payments will be made prior to receipt and acceptance of the Schedule of Values, provided in such detail as required by ODR, and submitted not less than twenty-one (21) days prior to the first request for payment. The Schedule of Values shall follow the order of trade divisions of the Specifications and include itemized costs for general conditions, costs for preparing Close-Out documents, fees, contingencies, and Owner cash allowances, if applicable, so that the sum of the items will equal the Contract price. As appropriate, assign each item labor and/or material values, the subtotal thereof equaling the value of the work in place when complete.

10.1.1.1 Owner requires that the Work items be inclusive of the cost of the Work items only. Any contract markups for overhead and profit, general conditions, etc., shall be contained within separate line items for those specific purposes which shall be divided into at least two (2) lines, one (1) for labor and one (1) for materials.

10.1.2 Contractor shall retain a copy of all worksheets used in preparation of its bid or proposal, supported by a notarized statement that the worksheets are true and complete copies of the documents used to prepare the bid or proposal. Make the worksheets available to ODR at the time of Contract execution. Thereafter Contractor shall grant Owner during normal business hours access to said copy of worksheets at any time during the period commencing upon execution of the Contract and ending one year after final payment.

10.2. Progress Payments. Contractor will receive periodic progress payments for Work performed, materials in place, suitably stored on Site, or as otherwise agreed to by Owner and Contractor. Payment is not due until receipt by ODR or his designee of a correct and complete Pay Application in electronic and/or hard copy format as set forth in the Agreement or the Owner's Special Conditions, and certified by A/E. Progress payments are made provisionally and do not constitute acceptance of work not in accordance with the Contract Documents. Owner will not process progress payment applications for Change Order Work until all parties execute the Change Order.

10.2.1 Preliminary Pay Worksheet. Once each month that a progress payment is to be requested, the Contractor shall submit to A/E and ODR a complete, clean copy of a preliminary pay worksheet or preliminary pay application, to include the following:

10.2.1.1 Contractor's estimate of the amount of Work performed, labor furnished and materials incorporated into the Work, using the established Schedule of Values;

10.2.1.2 An updated Work Progress Schedule including the executive summary and all required schedule reports;

10.2.1.3 HUB subcontracting plan Progress Assessment Report as required in Paragraph 4.2.5.1;

10.2.1.4 Such additional documentation as Owner may require as set forth in the elsewhere

in the Contract Documents; and

10.2.1.5 Construction payment affidavit.

10.2.2 Contractor's Application for Payment. As soon as practicable, but in no event later than seven (7) days after receipt of the preliminary pay worksheet, A/E and ODR will meet with Contractor to review the preliminary pay worksheet and to observe the condition of the Work. Based on this review, ODR and A/E may require modifications to the preliminary pay worksheet prior to the submittal of an Application for Payment, and will promptly notify Contractor of revisions necessary for approval. As soon as practicable, Contractor shall submit its Application for Payment on the appropriate and completed form, reflecting the required modifications to the Schedule of Values required by A/E and/or ODR. Attach all additional documentation required by ODR and/or A/E, as well as an affidavit affirming that all payrolls, bills for labor, materials, equipment, subcontracted work and other indebtedness connected with Contractor's Application for Payment are paid or will be paid within the time specified in Tex. Gov't Code, Chapter 2251. No Application for Payment is complete unless it fully reflects all required modifications, and attaches all required documentation including Contractor's affidavit.

10.2.3 Certification by Architect/Engineer. Within five (5) days or earlier following A/E's receipt of Contractor's formal Application for Payment, A/E will review the Application for Payment for completeness, and forward it to ODR. A/E will certify that the application is complete and payable, or that it is incomplete, stating in particular what is missing. If the Application for Payment is incomplete, Contractor shall make the required corrections and resubmit the Application for Payment for processing.

10.3 Owner's Duty to Pay. Owner has no duty to pay the Contractor except on receipt by ODR of: 1) a complete Application for Payment certified by A/E; 2) Contractor's updated Work Progress Schedule; and 3) confirmation that Contractor has maintained and updated the Record Documents kept at the Site.

10.3.1 Payment for stored materials and/or equipment confirmed by Owner and A/E to be on-site or otherwise properly stored is limited to eighty-five (85) percent of the invoice price or eighty-five (85) percent of the scheduled value for the materials or equipment, whichever is less.

10.3.2 Retainage. Owner will withhold from each progress payment, as retainage, five (5) percent of the total earned amount, the amount authorized by law, or as otherwise set forth in the Owner's Special Conditions. Retainage is managed in conformance with Tex. Gov't Code, Chapter 2252, Subchapter B.

10.3.2.1 Contractor shall provide written consent of its surety for any request for reduction or release of retainage.

10.3.2.2 At least sixty-five (65) percent of the Contract, or such other discrete Work phase as set forth in Subsection 12.1.6 or Work package delineated in the Contract Documents, must be completed before Owner can consider a retainage reduction or release.

10.3.2.3 Contractor shall not withhold retainage from their Subcontractors and suppliers in amounts that are any percentage greater than that withheld in its Contract with Owner under this subsection, unless otherwise acceptable to Owner.

10.3.3 Price Reduction to Cover Loss. Owner may reduce any Application for Payment, prior to payment to the extent necessary to protect Owner from loss on account of actions of Contractor including, but not limited to, the following:

10.3.3.1 Defective or incomplete Work not remedied;

10.3.3.2 Damage to Work of a separate Contractor;

10.3.3.3 Failure to maintain scheduled progress or reasonable evidence that the Work will not be completed within the Contract Time;

10.3.3.4 Persistent failure to carry out the Work in accordance with the Contract Documents;

10.3.3.5 Reasonable evidence that the Work cannot be completed for the unpaid portion of the Contract Sum;

10.3.3.6 Assessment of fines for violations of prevailing wage rate law; or

10.3.3.7 Failure to include the appropriate amount of retainage for that periodic progress payment.

10.3.4 Title to all material and Work covered by progress payments transfers to Owner upon payment.

10.3.4.1 Transfer of title to Owner does not relieve Contractor and its Subcontractors of the sole responsibility for the care and protection of materials and Work upon which payments have been made until final acceptance, or the restoration of any damaged Work, or waive the right of Owner to require the fulfillment of all the terms of the Contract.

10.4 Progress Payments. Progress payments to Contractor do not release Contractor or its surety from any obligations under the Contract.

10.4.1 Upon Owner's request, Contractor shall furnish manifest proof of the status of Subcontractor's accounts in a form acceptable to Owner.

10.4.2 Pay estimate certificates must be signed by a corporate officer or a representative duly authorized by Contractor.

10.4.3 Provide copies of bills of lading, invoices, delivery receipts or other evidence of the location and value of such materials in requesting payment for materials.

10.4.4 For purposes of Tex. Gov't Code § 2251.021(a)(2), the date the performance of service is complete is the date when ODR approves the Application for Payment.

10.5 Off-Site Storage. With prior approval by Owner and in the event Contractor elects to store materials at an off-site location, abide by the following conditions, unless otherwise agreed to in writing by Owner.

10.5.1 Store materials in a commercial warehouse meeting the criteria stated below.

10.5.2 Provide insurance coverage adequate not only to cover materials while in storage, but also in transit from the off-site storage areas to the Project Site. Copies of duly authenticated certificates of insurance, made out to insure the State agency which is signatory to the Contract, must be filed with Owner's representative.

10.5.3 Inspection by Owner's representative is allowed at any time. Owner's inspectors must be satisfied with the security, control, maintenance, and preservation measures.

10.5.4 Materials for this Project are physically separated and marked for the Project in a sectioned-off area. Only materials which have been approved through the submittal process are to be considered for payment.

10.5.5 Owner reserves the right to reject materials at any time prior to final acceptance of the complete

Contract if they do not meet Contract requirements regardless of any previous progress payment made.

10.5.6 With each monthly payment estimate, submit a report to ODR and A/E listing the quantities of materials already paid for and still stored in the off-site location.

10.5.7 Make warehouse records, receipts and invoices available to Owner's representatives, upon request, to verify the quantities and their disposition.

10.5.8 In the event of Contract termination or default by Contractor, the items in storage off-site, upon which payment has been made, will be promptly turned over to Owner or Owner's agents at a location near the jobsite as directed by ODR. The full provisions of performance and payment bonds on this Project cover the materials off-site in every respect as though they were stored on the Project Site.

10.6 Time for Payment by Contractor Pursuant to Tex. Gov't Code § 2255.022.

10.6.1 Contractor who receives a payment from a governmental entity shall pay Subcontractor the appropriate share of the payment not later than the tenth (10th) day after the date Contractor receives the payment.

10.6.2 The appropriate share is overdue on the eleventh (11th) day after the date Contractor receives the payment.

Article 11. Changes

11.1 Change Orders. A Change Order issued after execution of the Contract is a written order to Contractor, signed by ODR, Contractor, and A/E, authorizing a change in the Work or an adjustment in the Contract Sum or the Contract Time. The Contract Sum and the Contract Time can only be changed by Change Order. A Change Order signed by Contractor indicates his agreement therewith, including the adjustment in the Contract Sum and/or the Contract Time. ODR may issue a written authorization for Contractor to proceed with Work of a Change Order in advance of final execution by all parties in accordance with Section 11.9.

11.1.1 Owner, without invalidating the Contract and without approval of Contractor's Surety, may order changes in the Work within the general scope of the Contract consisting of additions, deletions or other revisions, and the Contract Sum and the Contract Time will be adjusted accordingly. All such changes in the Work shall be authorized by Change Order or ULCO, and shall be performed under the applicable conditions of the Contract Documents. If such changes cause an increase or decrease in Contractor's cost of, or time required for, performance of the Contract, an equitable adjustment shall be made and confirmed in writing in a Change Order or a ULCO.

11.1.2 Owner and Contractor acknowledge and agree that the Specifications and Drawings may not be complete or free from errors, omissions and imperfections and that they may require changes or additions in order for the Work to be completed to the satisfaction of Owner. Therefore, any minor errors, omissions or imperfections in the Specifications or Drawings, or any changes in or additions to the Specifications or Drawings to correct minor errors or omissions or to the Work ordered by Owner shall not constitute or give rise to any claim, demand or cause of action of any nature whatsoever in favor of Contractor, whether for breach of Contract, or otherwise. However, should the nature of the errors or omissions necessitate substantial changes in the Work such that a Change Order is appropriate, Owner shall be liable to Contractor for the sum stated to be due Contractor in any Change Order approved and signed by both parties. The sum established in any Change Order, together with any extension of time contained in said Change Order, shall constitute full compensation to Contractor for all costs, expenses and damages to Contractor for the changes in the Work described in the Change Order, as permitted under Tex.

Gov't Code, Chapter 2260.

11.1.3 Procedures for administration of Change Orders shall be established by Owner and stated in the Owner's Special Conditions, or elsewhere in the Contract Documents.

11.1.4 No verbal order, verbal statement, or verbal direction of Owner or his duly appointed representative shall be treated as a change under this article or entitle Contractor to an adjustment.

11.1.5 Contractor agrees that Owner or any of its duly authorized representatives shall have access and the right to examine any directly pertinent books, documents, papers, and records of Contractor. Further, Contractor agrees to include in all its subcontracts a provision to the effect that Subcontractor agrees that Owner or any of its duly authorized representatives shall have access to and the right to examine any directly pertinent books, documents, papers and records of such Subcontractor relating to any claim arising from the Contract, whether or not the Subcontractor is a party to the claim. The period of access and examination described herein which relates to appeals under the Disputes article of the Contract, litigation, or the settlement of claims arising out of the performance of the Contract shall continue until final disposition of such claims, appeals or litigation.

11.2 Unit Prices. If unit prices are stated in the Contract Documents or subsequently agreed upon and if the quantities originally contemplated in setting the unit prices are so changed in a Proposed Change Order that application of the agreed unit prices to the quantities of work proposed will cause substantial inequity to Owner or Contractor, the applicable unit prices shall be equitably adjusted as provided in the Owner's Special Conditions or as agreed to by the parties and incorporated into a Change Order.

11.3 Claims for Additional Costs.

11.3.1 If Contractor wishes to make a claim for an increase in the Contract Sum not related to a requested change, it shall give Owner and A/E written notice thereof within twenty-one (21) days after the occurrence of the event or discovery of any conditions giving rise to such claim. Contractor must notify Owner and A/E before proceeding to execute any Work considered to add additional cost or time, except in an emergency endangering life or property in which case Contractor shall act in accordance with Subsection 7.2.1., and failure to provide the required notice will invalidate any subsequent notice or claim for additional cost or time for the Work. If Owner and Contractor cannot agree on the amount of the adjustment in the Contract Sum, it shall be determined as set forth under Article 15. Any change in the Contract Sum resulting from such claim shall be authorized by a Change Order or a ULCO.

11.3.2 If Contractor claims that additional cost is involved because of, but not limited to, 1) any written interpretation of the Contract Documents, 2) any order by Owner to stop the Work pursuant to Article 14 where Contractor was not at fault, or 3) any written order for a minor change in the Work issued pursuant to Section 11.4, Contractor shall make such claim as provided in Subsection 11.3.1.

11.3.3 Should Contractor or his Subcontractors fail to call attention of A/E to discrepancies or omissions in the Contract Documents, but claim additional costs for corrective Work after Contract award, Owner may assume intent to circumvent competitive bidding for necessary corrective Work. In such case, Owner may choose to let a separate Contract for the corrective Work, or issue a ULCO to require performance by Contractor. Claims for time extensions or for extra cost resulting from delayed notice of patent Contract Document discrepancies or omissions will not be considered by Owner.

11.4 Minor Changes. A/E, with concurrence of ODR, will have authority to order minor changes in the Work not involving an adjustment in the Contract Sum or an extension of the Contract Time. Such changes shall be effected by written order which Contractor shall carry out promptly and record on the Record

Documents.

11.5 Concealed Site Conditions. Contractor is responsible for visiting the Site and being familiar with local conditions such as the location, accessibility, and general character of the Site and/or building. If, in the performance of the Contract, subsurface, latent, or concealed conditions at the Site are found to be materially different from the information included in the Contract Documents, or if unknown conditions of an unusual nature are disclosed differing materially from the conditions usually inherent in Work of the character shown and specified, ODR and A/E shall be notified in writing of such conditions before they are disturbed. Upon such notice, or upon its own observation of such conditions, A/E, with the approval of ODR, will promptly make such changes in the Drawings and Specifications as they deem necessary to conform to the different conditions, and any increase or decrease in the cost of the Work, or in the time within which the Work is to be completed, resulting from such changes will be adjusted by Change Order, subject to the prior approval of ODR.

11.6 Extension of Time. All changes to the Contract Time shall be made as a consequence of requests as required under Section 9.6, and as documented by Change Order as provided under Section 11.1.

11.7 Administration of Change Order Requests. All changes in the Contract shall be administered in accordance with procedures approved by Owner, and when required, make use of such electronic information management system(s) as Owner may employ.

11.7.1 Routine changes in the construction Contract shall be formally initiated by A/E by means of a PCO form detailing requirements of the proposed change for pricing by Contractor. This action may be preceded by communications between Contractor, A/E and ODR concerning the need and nature of the change, but such communications shall not constitute a basis for beginning the proposed Work by Contractor. Except for emergency conditions described below, approval of Contractor's cost proposal by A/E and ODR will be required for authorization to proceed with the Work being changed. Owner will not be responsible for the cost of Work changed without prior approval and Contractor may be required to remove Work so installed.

11.7.2 All proposed costs for change order Work must be supported by itemized accounting of material, equipment and associated itemized installation costs in sufficient detail, following the outline and organization of the established Schedule of Values, to permit analysis by A/E and ODR using current estimating guides and/or practices. Photocopies of Subcontractor and vendor proposals shall be furnished unless specifically waived by ODR. Contractor shall provide written response to a change request within twenty-one (21) days of receipt.

11.7.3 Any unexpected circumstance which necessitates an immediate change in order to avoid a delay in progress of the Work may be expedited by verbal communication and authorization between Contractor and Owner, with written confirmation following within twenty-four (24) hours. A limited scope not-to-exceed estimate of cost and time will be requested prior to authorizing Work to proceed. Should the estimate be impractical for any reason, ODR may authorize the use of detailed cost records of such work to establish and confirm the actual costs and time for documentation in a formal Change Order.

11.7.4 Emergency changes to save life or property may be initiated by Contractor alone (see Section 7.3) with the claimed cost and/or time of such work to be fully documented as to necessity and detail of the reported costs and/or time.

11.7.5 The method of incorporating approved Change Orders into the parameters of the accepted Schedule of Values must be coordinated and administered in a manner acceptable to ODR.

11.8 Pricing Change Order Work. The amounts that Contractor and/or its Subcontractor adds to a Change Order for profit and overhead will also be considered by Owner before approval is given. The amounts established hereinafter are the maximums that are acceptable to Owner.

11.8.1 For Work performed by its forces, Contractor will be allowed its actual costs paid for materials, the total amount of its actual wages paid for labor, plus its actual cost paid for ~~of~~ State and Federal payroll taxes and for ~~of~~ worker's compensation and comprehensive general liability insurance, plus its actual additional bond and builders risk insurance cost if the change results in an increase in the premium paid by Contractor. To the total of the above costs, Contractor will be allowed to add a percentage as noted below to cover overhead and profit combined. Overhead shall be considered to include insurance other than mentioned above, field and office supervisors and assistants, including safety and scheduling personnel, use of small tools, incidental job burdens and general Home Office expenses, and no separate allowance will be made therefore.

Allowable percentages for overhead and profit on changes will not exceed 15 percent if the total of self-performed work is less than or equal to $10,000, 10 percent if the total of self-performed work is between $10,000 and $20,000 and 7.5 percent if the total of self-performed work is over $20,000, for any specific change priced.

11.8.2 For subcontracted Work each affected Subcontractor shall figure its costs, overhead and profit as described above for Contractor's Work, all Subcontractor costs shall be combined, and to that total Subcontractor cost Contractor will be allowed to add a maximum mark-up of ten (10) percent if the total of all subcontracted work is less than or equal to $10,000, seven and half (7.5) percent if the total of all subcontracted work is between $10,000 and $20,000 and five (5) percent if the total of all subcontractor work is over $20,000.

11.8.3 On changes involving both additions and deletions, percentages for overhead and profit will be allowed only on the net addition. Owner does not accept and will not pay for additional Contract cost identified as indirect or consequential damages or as damages caused by delay.

11.8.4 For Contracts based on a Guaranteed Maximum Price (GMP), the Construction Manager-at-Risk or Design Builder shall NOT be entitled to a percentage mark-up on any Change Order Work unless the Change Order increases the Guaranteed Maximum Price.

11.9 Unilateral Change Order (ULCO). Owner may issue a written ULCO directing a change in the Work prior to reaching agreement with Contractor on the adjustment, if any, in the Contract price and/or the Contract Time.

11.9.1 Owner and Contractor shall negotiate for appropriate adjustments, as applicable, to the Contract Sum or the Contract Time arising out of a ULCO. As the changed Work is performed, Contractor shall submit its costs for such Work with its Application for Payment beginning with the next Application for Payment within thirty (30) days of the issuance of the ULCO. The Parties reserve their rights to dispute the ULCO amount, subject to Article 15.

11.10 Finality of Changes—Contractor. Upon execution of a Change Order and /or a ULCO by Owner, Contractor and A/E, all costs and time issues claimed by Contractor regarding that change are final and not subject to increase.

11.11 Audit of Changes—Owner. All Changes Orders are subject to audit by Owner or its representative at any time in accordance with Article 17.4 and Change Order amounts may be adjusted lower as a result of such audit.

Article 12. Project Completion and Acceptance

12.1 Closing Inspections.

12.1.1 Substantial Completion Inspection. When Contractor considers the entire Work or part thereof Substantially Complete, it shall notify ODR in writing that the Work will be ready for Substantial Completion inspection on a specific date. Contractor shall include with this notice

Contractor's Punchlist to indicate that it has previously inspected all the Work associated with the request for inspection, noting items it has corrected and included all remaining work items with date scheduled for completion or correction prior to final inspection. The failure to include any items on this list does not alter the responsibility of Contractor to complete all Work in accordance with the Contract Documents. If any of the items on this list prevents the Project from being used as intended, Contractor shall not request a Substantial Completion Inspection. Owner and its representatives will review the list of items and schedule the requested inspection, or inform Contractor in writing that such an inspection is premature because the Work is not sufficiently advanced or conditions are not as represented on Contractor's list.

12.1.1.1 Prior to the Substantial Completion inspection, Contractor shall furnish a copy of its marked-up Record Documents and a preliminary copy of each instructional manual, maintenance and operating manual, parts catalog, wiring diagrams, spare parts, specified written warranties, and like publications or parts for all installed equipment, systems, and like items as described in the Contract Documents. Delivery of these items is a prerequisite for requesting the Substantial Completion inspection.

12.1.1.2 On the date requested by Contractor, or as mutually agreed upon pending the status of the Open Items List, A/E, ODR, Contractor, and other Owner representatives as determined by Owner will jointly attend the Substantial Completion inspection, which shall be conducted by ODR or their delegate. If ODR concurs with the determination of Contractor and A/E that the Work is Substantially Complete, ODR will issue a Certificate of Substantial Completion to be signed by A/E, Owner, and Contractor establishing the date of Substantial Completion and identifying responsibilities for security, insurance and maintenance. A/E will provide with this certificate a list of Punchlist items (the pre-final Punchlist) for completion prior to final inspection. This list may include items in addition to those on Contractor's Punchlist, which the inspection team deems necessary to correct or complete prior to final inspection. If Owner occupies the Project upon determination of Substantial Completion, Contractor shall complete all corrective Work at the convenience of Owner, without disruption to Owner's use of the Project for its intended purposes.

12.1.2 Final Inspection. Contractor shall complete the list of items identified on the pre-final Punchlist prior to requesting a final inspection. Unless otherwise specified, or otherwise agreed in writing by the parties as documented on the Certificate of Substantial Completion, Contractor shall complete and/or correct all Work within thirty (30) days of the Substantial Completion date. Upon completion of the pre-final Punchlist work, Contractor shall give written notice to ODR and A/E that the Work will be ready for final inspection on a specific date. Contractor shall accompany this notice with a copy of the updated pre-final Punchlist indicating resolution of all items. On the date specified or as soon thereafter as is practicable, ODR, A/E and Contractor will inspect the Work. A/E will submit to Contractor a final Punchlist of open items that the inspection team requires corrected or completed before final acceptance of the Work.

12.1.2.1 Correct or complete all items on the final Punchlist before requesting Final Payment. Unless otherwise agreed to in writing by the parties, complete this work within seven (7) days of receiving the final Punchlist. Upon completion of the final Punchlist, notify A/E and ODR in writing stating the disposition of each final Punchlist item. A/E, Owner, and Contractor shall promptly inspect the completed items. When the final Punchlist is complete, and the Contract is fully satisfied according to the Contract Documents ODR will issue a certificate establishing the date of Final Completion. Completion of all Work is a condition precedent to Contractor's right to receive Final Payment.

12.1.3 Annotation. Any Certificate issued under this Article may be annotated to indicate that it is not applicable to specified portions of the Work, or that it is subject to any limitation as determined

by Owner.

12.1.4 Purpose of Inspection. Inspection is for determining the completion of the Work, and does not relieve Contractor of its overall responsibility for completing the Work in a good and competent fashion, in compliance with the Contract. Work accepted with incomplete Punchlist items or failure of Owner or other parties to identify Work that does not comply with the Contract Documents or is defective in operation or workmanship does not constitute a waiver of Owner's rights under the Contract or relieve Contractor of its responsibility for performance or warranties.

12.1.5 Additional Inspections.

12.1.5.1 If Owner's inspection team determines that the Work is not substantially complete at the Substantial Completion inspection, ODR or A/E will give Contractor written notice listing cause(s) of the rejection. Contractor will set a time for completion of incomplete or defective work acceptable to ODR. Contractor shall complete or correct all work so designated prior to requesting a second Substantial Completion inspection.

12.1.5.2 If Owner's inspection team determines that the Work is not complete at the final inspection, ODR or A/E will give Contractor written notice listing the cause(s) of the rejection. Contractor will set a time for completion of incomplete or defective work acceptable to ODR. Contractor shall complete or correct all Work so designated prior to again requesting a final inspection.

12.1.5.3 The Contract contemplates three (3) comprehensive inspections: the Substantial Completion inspection, the Final Completion inspection, and the inspection of completed final Punchlist items. The cost to Owner of additional inspections resulting from the Work not being ready for one or more of these inspections is the responsibility of Contractor. Owner may issue a ULCO deducting these costs from Final Payment. Upon Contractor's written request, Owner will furnish documentation of any costs so deducted. Work added to the Contract by Change Order after Substantial Completion inspection is not corrective Work for purposes of determining timely completion, or assessing the cost of additional inspections.

12.1.6 Phased Completion. The Contract may provide, or Project conditions may warrant, as determined by ODR, that designated elements or parts of the Work be completed in phases. Where phased completion is required or specifically agreed to by the parties, the provisions of the Contract related to closing inspections, occupancy, and acceptance apply independently to each designated element or part of the Work. For all other purposes, unless otherwise agreed by the parties in writing, Substantial Completion of the Work as a whole is the date on which the last element or part of the Work completed receives a Substantial Completion certificate. Final Completion of the Work as a whole is the date on which the last element or part of the Work completed receives a Final Completion certificate or notice.

12.2 Owner's Right of Occupancy. Owner may occupy or use all or any portion of the Work following Substantial Completion, or at any earlier stage of completion. Should Owner wish to use or occupy the Work, or part thereof, prior to Substantial Completion, ODR will notify Contractor in writing and identify responsibilities for security, insurance and maintenance Work performed on the premises by third parties on Owner's behalf does not constitute occupation or use of the Work by Owner for purposes of this Article. All Work performed by Contractor after occupancy, whether in part or in whole, shall be at the convenience of Owner so as to not disrupt Owner's use of, or access to occupied areas of the Project.

12.3 Acceptance and Payment

12.3.1 Request for Final Payment. Following the certified completion of all work, including all final Punchlist items, cleanup, and the delivery of record documents, Contractor shall submit a certified Application for Final Payment and include all sums held as retainage and forward to A/E and ODR for review and approval.

12.3.2 Final Payment Documentation. Contractor shall submit, prior to or with the Application for Final Payment, final copies of all Close-Out documents, maintenance and operating instructions, guarantees and warranties, certificates, Record Documents and all other items required by the Contract. Contractor shall submit evidence of return of access keys and cards, evidence of delivery to Owner of attic stock, spare parts, and other specified materials. Contractor shall submit consent of surety to Final Payment form and an affidavit that all payrolls, bills for materials and equipment, subcontracted work and other indebtedness connected with the Work, except as specifically noted, are paid, will be paid, after payment from Owner or otherwise satisfied within the period of time required by Tex. Gov't Code, Chapter 2251. Contractor shall furnish documentation establishing payment or satisfaction of all such obligations, such as receipts, releases and waivers of claims and liens arising out of the Contract. Contractor may not subsequently submit a claim on behalf of Subcontractor or vendor unless Contractor's affidavit notes that claim as an exception.

12.3.3 Architect/Engineer Approval. A/E will review a submitted Application for Final Payment promptly but in no event later than ten (10) days after its receipt. Prior to the expiration of this deadline, A/E will either: 1) return the Application for Final Payment to Contractor with corrections for action and resubmission; or 2) accept it, note their approval, and send to Owner.

12.3.4 Offsets and Deductions. Owner may deduct from the Final Payment all sums due from Contractor. If the Certificate of Final Completion notes any Work remaining, incomplete, or defects not remedied, Owner may deduct the cost of remedying such deficiencies from the Final Payment. On such deductions, Owner will identify each deduction, the amount, and the explanation of the deduction on or by the twenty-first (21st) day after Owner's receipt of an approved Application for Final Payment. Such offsets and deductions shall be incorporated via a final Change Order, including a ULCO as may be applicable.

12.3.5 Final Payment Due. Final Payment is due and payable by Owner, subject to all allowable offsets and deductions, on the thirtieth (30th) day following Owner's approval of the Application for Payment. If Contractor disputes any amount deducted by Owner, Contractor shall give notice of the dispute on or before the thirtieth (30th) day following receipt of Final Payment. Failure to do so will bar any subsequent claim for payment of amounts deducted.

12.3.6 Effect of Final Payment. Final Payment constitutes a waiver of all claims by Owner, relating to the condition of the Work except those arising from:

12.3.6.1 Faulty or defective Work appearing after Substantial Completion (latent defects);

12.3.6.2 Failure of the Work to comply with the requirements of the Contract Documents;

12.3.6.3 Terms of any warranties required by the Contract, or implied by law; or

12.3.6.4 Claims arising from personal injury or property damage to third parties.

12.3.7 Waiver of Claims. Final payment constitutes a waiver of all claims and liens by Contractor except those specifically identified in writing and submitted to ODR prior to the application for Final Payment.

12.3.8 Effect on Warranty. Regardless of approval and issuance of Final Payment, the Contract is not deemed fully performed by Contractor and closed until the expiration of all warranty periods.

Article 13. Warranty and Guarantee

13.1 Contractor's General Warranty and Guarantee. Contractor warrants to Owner that all Work is executed in accordance with the Contract, complete in all parts and in accordance with approved practices and customs, and of the required finish and workmanship. Contractor further warrants that unless otherwise specified, all materials and equipment incorporated in the Work under the Contract are new. Owner may, at its option, agree in writing to waive any failure of the Work to conform to the Contract, and to accept a reduction in the Contract price for the cost of repair or diminution in value of the Work by reason of such defect. Absent such a written agreement, Contractor's obligation to perform and complete the Work in accordance with the Contract Documents is absolute and is not waived by any inspection or observation by Owner, A/E or others, by making any progress payment or final payment, by the use or occupancy of the Work or any portion thereof by Owner, at any time, or by any repair or correction of such defect made by Owner.

13.2 Warranty Period. Except as may be otherwise specified or agreed, Contractor shall repair all defects in materials, equipment, or workmanship appearing within one year from the date of Substantial Completion of the Work. If Substantial Completion occurs by phase, then the warranty period for ~~that~~ the Work performed for each phase begins on the date of Substantial Completion of that phase, or as otherwise stipulated on the Certificate of Substantial Completion for the particular phase.

13.3 Limits on Warranty. Contractor's warranty and guarantee hereunder excludes defects or damage caused by:

13.3.1 Modification or improper maintenance or operation by persons other than Contractor, Subcontractors, or any other individual or entity for whom Contractor is not responsible, unless Owner is compelled to undertake maintenance or operation due to the neglect of Contractor.

13.3.2 Normal wear and tear under normal usage after acceptance of the Work by Owner.

13.4 Events Not Affecting Warranty. Contractor's obligation to perform and complete the Work in a good and workmanlike manner in accordance with the Contract Documents is absolute. None of the following will constitute an acceptance of Work that is not in accordance with the Contract Documents or relieve the Contractor from its obligation to perform the Work in accordance with the Contract Documents:

13.4.1 Observations by Owner and/or A/E;

13.4.2 Recommendation to pay any progress or final payment by A/E;

13.4.3 The issuance of a certificate of Substantial Completion or any payment by Owner to Contractor under the Contract Documents;

13.4.4 Use or occupancy of the Work or any part thereof by Owner**;**

13.4.5 Any acceptance by Owner or any failure to do so;

13.4.6 Any review of a Shop Drawing or sample submittal; or

13.4.7 Any inspection, test or approval by others.

13.5 Separate Warranties. If a particular piece of equipment or component of the Work for which the Contract requires a separate warranty is placed in continuous service before Substantial Completion, the warranty period for that equipment or component will not begin until Substantial Completion, regardless of any warranty agreements in place between suppliers and/or Subcontractors and Contractor. ODR will certify the date of service commencement in the Substantial Completion certificate.

13.5.1 In addition to Contractor's warranty and duty to repair, Contractor expressly assumes all

warranty obligations required under the Contract for specific building components, systems and equipment.

13.5.2 Contractor may satisfy any such obligation by obtaining and assigning to Owner a complying warranty from a manufacturer, supplier, or Subcontractor. Where an assigned warranty is tendered and accepted by Owner which does not fully comply with the requirements of the Contract, Contractor remains liable to Owner on all elements of the required warranty not provided by the assigned warranty.

13.6 Correction of Defects. Upon receipt of written notice from Owner, or any agent of Owner designated as responsible for management of the warranty period, of the discovery of a defect, Contractor shall promptly remedy the defect(s), and provide written notice to Owner and designated agent indicating action taken. In case of emergency where delay would cause serious risk of loss or damage to Owner, or if Contractor fails to remedy within thirty (30) days, or within another period agreed to in writing, Owner may correct the defect and be reimbursed the cost of remedying the defect from Contractor or its surety.

Article 14. Suspension and Termination

14.1 Suspension of Work for Cause. Owner may, at any time without prior notice, suspend all or any part of the Work if, after reasonable observation and/or investigation, Owner determines it is necessary to do so to prevent or correct any condition of the Work which constitutes an immediate safety hazard or which may reasonably be expected to impair the integrity, usefulness or longevity of the Work when completed.

14.1.1 Owner will give Contractor a written notice of suspension for cause, setting forth the reason for the suspension and identifying the Work suspended. Upon receipt of such notice, Contractor shall immediately stop the Work so identified. As soon as practicable following the issuance of such a notice, Owner will initiate and complete a further investigation of the circumstances giving rise to the suspension, and issue a written determination of the findings.

14.1.2 If it is confirmed that the cause was within the control of Contractor, Contractor will not be entitled to an extension of time for delay resulting from the suspension. If the cause is determined not to have been within the control of Contractor, and the suspension has prevented Contractor from completing the Work within the Contract Time, the suspension is an excusable delay and a time extension will be granted through a Change Order.

14.1.3 Suspension of Work under this provision will be no longer than is reasonably necessary to remedy the conditions giving rise to the suspension.

14.2 Suspension of Work for Owner's Convenience. Upon seven (7) days written notice to Contractor, Owner may at any time without breach of the Contract suspend all or any portion of the Work for a period of up to sixty (60) days for its own convenience. Owner will give Contractor a written notice of suspension for convenience, which sets forth the number of suspension days for which the Work, or any portion of it, and the date on which the suspension of Work will cease. When such a suspension prevents Contractor from completing the Work within the Contract Time, it is an excusable delay. A notice of suspension for convenience may be modified by Owner at any time on seven (7) days written notice to Contractor. If Owner suspends the Work for its convenience for more than sixty (60) consecutive days, Contractor may elect to terminate the Contract pursuant to the provisions of the Contract.

14.3 Termination by Owner for Cause.

14.3.1 Upon thirty (30) days written notice to Contractor and its surety, Owner may, without prejudice to any right or remedy, terminate the Contract and take possession of the Site and of all materials, equipment, tools, construction equipment, and machinery thereon owned by Contractor under any of the following circumstances:

14.3.1.1 Persistent or repeated failure or refusal, except during complete or partial suspensions of work authorized under the Contract, to supply enough properly skilled workmen or proper materials;

14.3.1.2 Persistent disregard of laws, ordinances, rules, regulations or orders of any public authority having jurisdiction, including ODR;

14.3.1.3 Persistent failure to prosecute the Work in accordance with the Contract, and to ensure its completion within the time, or any approved extension thereof, specified in the Contract;

14.3.1.4 Failure to remedy defective work condemned by ODR;

14.3.1.5 Failure to pay Subcontractors, laborers, and material suppliers pursuant to Tex. Gov't Code, Chapter 2251;

14.3.1.6 Persistent endangerment to the safety of labor or of the Work;

14.3.1.7 Failure to supply or maintain statutory bonds or to maintain required insurance, pursuant to the Contract;

14.3.1.8 Any material breach of the Contract; or

14.3.1.9 Contractor's insolvency, bankruptcy, or demonstrated financial inability to perform the Work.

14.3.2 Failure by Owner to exercise the right to terminate in any instance is not a waiver of the right to do so in any other instance.

14.3.3 Upon receipt of a termination notice, the Contractor or its Surety has thirty (30) days to cure the reasons for the termination or demonstrate to the satisfaction of the Owner that it is prepared to remedy to the condition(s) upon which the notice of termination was based with diligence and promptness. If the Owner is satisfied that the Contractor or its Surety can remedy the reasons for the termination and complete the Work as required, the notice of termination shall be rescinded in writing by the Owner and the Work shall continue without an extension of time.

14.3.4 If at the conclusion of the thirty (30) day cure period the Contractor or its Surety is unable to demonstrate to the satisfaction of the Owner its ability to remedy the reasons for termination, the Owner may immediately terminate the employment of the Contractor, make alternative arrangements for completion of the Work and deduct the cost of completion from the unpaid Contract Sum.

14.3.4.1 Owners cost to complete the Work includes, but is not limited to, fees for additional services by A/E and other consultants, and additional contract administration costs.

14.3.4.2 Owner will make no further payment to Contractor or its surety unless the costs to complete the Work are less than the Contract balance, then the difference shall be paid to Contractor or its surety. If such costs exceed the unpaid balance, Contractor or its surety will pay the difference to Owner.

14.3.4.3 This obligation for payment survives the termination of the Contract.

14.3.4.4 Owner reserves the right in termination for cause to take assignment of all the Contracts between Contractor and its Subcontractors, vendors, and suppliers. ODR will promptly notify Contractor of the contracts Owner elects to assume. Upon receipt of such notice, Contractor shall promptly take all steps necessary to effect

such assignment.

14.4 Conversion to Termination for Convenience. In the event that any termination of Contractor for cause under Section 14.3 is later determined to have been improper, the termination shall automatically convert to a termination for convenience under Section 14.5 and Contractor's recovery for termination shall be strictly limited to the payments allowable under Section 14.5.

14.5 Termination for Convenience of Owner. Owner reserves the right, without breach, to terminate the Contract prior to, or during the performance of the Work, for any reason. Upon such an occurrence, the following shall apply:

14.5.1 Owner will notify Contractor and A/E in writing specifying the reason for and the effective date of the Contract termination. The notice may also contain instructions necessary for the protection, storage or decommissioning of incomplete work or systems, and for safety.

14.5.2 Upon receipt of the notice of termination, Contractor shall immediately proceed with the following obligations, regardless of any dispute in determining or adjusting any amounts due at that point in the Contract:

14.5.2.1 Stop all work.

14.5.2.2 Place no further subcontracts or orders for materials or services.

14.5.2.3 Terminate all subcontracts for convenience.

14.5.2.4 Cancel all materials and equipment orders as applicable.

14.5.2.5 Take appropriate action that is necessary to protect and preserve all property related to the Contract which is in the possession of Contractor.

14.5.3 When the Contract is terminated for Owner's convenience, Contractor may recover from Owner payment for all Work executed. Contractor may not claim lost profits or lost business opportunities.

14.6 Termination By Contractor. If the Work is stopped for a period of ninety (90) days under an order of any court or other public authority having jurisdiction, or as a result of an act of government, such as a declaration of a national emergency making materials unavailable, through no act or fault of Contractor or Subcontractor or their agents or employees or any other persons performing any of the Work under a contract with Contractor, then Contractor may, upon thirty (30) additional days written notice to ODR, terminate the Contract and recover from Owner payment for all Work executed, but not lost profits or lost business opportunities. If the cause of the Work stoppage is removed prior to the end of the thirty (30) day notice period, Contractor may not terminate the Contract.

14.7 Settlement on Termination. When the Contract is terminated for any reason, at any time prior to one hundred eighty (180) days after the effective date of termination, Contractor shall submit a final termination settlement proposal to Owner based upon recoverable costs as provided under the Contract. If Contractor fails to submit the proposal within the time allowed, Owner may unilaterally determine the amount due to Contractor because of the termination and pay the determined amount to Contractor.

Article 15. Dispute Resolution

15.1 Unresolved Contractor Disputes. To the extent that it is applicable, the dispute resolution process provided for in Tex. Gov't Code, Chapter 2260, shall be used by Contractor to resolve any claim for breach of Contract made by Contractor that is not resolved under procedures described in these Uniform General Conditions or Owner's Special Conditions of the Contract.

15.2 Alternative Dispute Resolution Process. Owner may establish a dispute resolution process to be utilized in advance of that outlined in Tex. Gov't Code, Chapter 2260.

15.3 Nothing herein shall hinder, prevent, or be construed as a waiver of Owner's right to seek redress on any disputed matter in a court of competent jurisdiction.

15.4 In any litigation between the Owner and the Contractor arising from this Contract or this Project, neither party will be entitled to an award of legal fees or costs in any judgment regardless which one is deemed the prevailing party.

15.5 Nothing herein shall waive or be construed as a waiver of the State's sovereign immunity.

Article 16. Certification of No Asbestos Containing Material or Work

16.1 Contractor shall insure that Texas Department of State Health Services licensed individuals, consultants or companies are used for any required asbestos work including asbestos inspection, asbestos abatement plans/specifications, asbestos abatement, asbestos project management and third-party asbestos monitoring.

16.2 Contractor shall provide a notarized certification to Owner that all equipment and materials used in fulfillment of its Contract responsibilities are non-Asbestos Containing Building Materials (ACBM). This certification must be provided no later than Contractor's application for Final Payment.

16.3 The Contractor shall insure compliance with the following acts from all of his subcontractors and assigns:

- Asbestos Hazard Emergency Response Act (AHERA—40 CFR 763-99 (7));
- National Emission Standards for Hazardous Air Pollutants (NESHAP—EPA 40 CFR 61, Subpart M—National Emission Standard for Asbestos;
- Texas Asbestos Health Protection Rules (TAHPR—Tex. Admin. Code Title 25, Part 1, Ch. 295C, Asbestos Health Protection

Article 17. Miscellaneous

17.1 Owner's Special Conditions. When the Work contemplated by Owner is of such a character that the foregoing Uniform General Conditions of the Contract cannot adequately cover necessary and additional contractual relationships, the Contract may include Owner's Special Conditions that relate to the Project. In the event of a conflict between the UTUGCs and the Owner's Special Conditions, the Owner's Special Conditions will govern.

17.2 Federally Funded Projects. On Federally funded projects, Owner may waive, suspend or modify any Article in these Uniform General Conditions which conflicts with any Federal statue, rule, regulation or procedure, where such waiver, suspension or modification is essential to receipt by Owner of such Federal funds for the Project. In the case of any Project wholly financed by Federal funds, any standards required by the enabling Federal statute, or any Federal rules, regulations or procedures adopted pursuant thereto, shall be controlling.

17.3 Internet-based Project Management Systems. At its option, Owner may administer its design and construction management through an Internet-based management system. In such cases, Contractor shall conduct communication through this media and perform all Project related functions utilizing this database system. This includes correspondence, submittals, Requests for Information, vouchers or payment requests and processing, amendment, Change Orders and other administrative activities.

17.3.1 Accessibility and Administration.

17.3.1.1 When used, Owner will make the software accessible via the Internet to all Project team members.

17.3.1.2 Owner shall administer the software.

17.3.2 Training. When used, Owner shall provide training to the Project team members.

17.4 Right to Audit.

17.4.1 Contractor understands that acceptance of funds under this Contract acts as acceptance of the authority of the State Auditor's Office, Owner, any successor agency and their representatives, including independent auditors, to conduct an audit or investigation in connection with those funds. Contractor further agrees to cooperate fully with any party conducting the audit or investigation, including providing all records requested.

17.4.2 Contractor shall maintain and retain supporting fiscal and any other documents relevant to showing that any payments under this Contract funds were expended in accordance with the terms of this Contact, the requirements of Owner, and with the laws and regulations of the State of Texas including, but not limited to, requirements of the Comptroller of the State of Texas and the State Auditor. Contractor shall maintain all such documents and other records relating to this Contract and Owner's property for a period of four (4) years after the date of submission of a request for Final Payment or until a resolution of all billing questions, whichever is later. Contractor shall make available at reasonable times and upon reasonable notice and for reasonable periods all documents and other information related to the Work of this Contract.

17.4.3 Contractor shall ensure that this clause concerning the authority to audit funds received indirectly by subcontractors through the Contractor and the requirement to cooperate is included in any subcontract it awards.

17.5 179 D Benefit Allocation. Owner may decide to seek the allocation of certain tax benefits pursuant to Section 179D of the Internal Revenue Code of 1986, as amended, (the "Code") through its Agreement with Contractor

If the Owner and the Internal Revenue Service (IRS) determine that the Contractor is eligible to receive the 179D deduction allocation as a "Designer" for the purposes of Section 179D of the Code or that Contractor could otherwise profit financially from the monetization of the benefit (separately and collectively, the "Rebate"), Contractor hereby agrees to allocate to the Owner a portion of the Rebate in an amount to be determined and contracted for on mutually agreeable terms when the value of the Rebate becomes ascertainable, net of associated costs realized by the Owner and Project Architect. At its sole discretion, the Owner shall determine whether to receive its portion of the Rebate in cash, discounted Contractor fees or both.

Owner reserves the right to retain a third-party consultant (the "Consultant") to manage and administer the process of obtaining and monetizing the Rebate derived from the Project(s).

Contractor agrees to cooperate in all reasonable respects with the Consultant's efforts to obtain and monetize any such Rebates derived from the Project(s) on behalf of the Owner. Certification of eligibility and negotiation of the Rebates should be facilitated by the Owner's 179D Consultant.

17.6 Force Majeure. Neither Owner nor Contractor will be liable or responsible to the other for any loss or damage or for any delays or failure to perform due to causes beyond its reasonable control including acts of God, strikes, epidemics, war, riots, flood, fire, sabotage, or any other circumstances of like character.

17.7 Confidentiality and Safeguarding of Owner Records; Press Releases; Public Information. Under the Contract, Contractor may (1) create, (2) receive from or on behalf of Owner, or (3) have access to, Owner records or record systems (collectively, "Owner Records"). Contractor represents, warrants, and agrees that it will: (1) hold all Owner Records in strict confidence and will not use or disclose Owner Records except as (a) permitted or required by the Contract, (b) required by Applicable Laws, or (c) otherwise authorized by Owner in writing; (2) safeguard Owner Records according to reasonable administrative,

physical and technical standards that are no less rigorous than the standards by which Contractor protects its own confidential information; and (3) comply with the Owner's rules, policies, and procedures regarding access to and use of Owner's computer systems. At the request of Owner, Contractor agrees to provide a written summary of the procedures Contractor uses to safeguard and maintain the confidentiality of Owner Records.

17.7.1 Notice of Impermissible Use. If an impermissible use or disclosure of any Owner Records occurs, Contractor will provide written notice to University within one (1) business day after Contractor's discovery of that use or disclosure. Contractor will promptly provide Owner with all information requested by University regarding the impermissible use or disclosure.

17.7.2 Return of University Records. Contractor agrees that within thirty (30) days after the expiration or termination of the Contract, for any reason, all Owner Records created or received from or on behalf of University will be (1) returned to Owner, with no copies retained by Contractor; or (2) if return is not feasible, destroyed following twenty (20) days written notice to the Owner. Contractor will confirm in writing the destruction of any Owner Records.

17.7.3 Disclosure. If Contractor discloses any Owner Records to a subcontractor or agent, Contractor will require the subcontractor or agent to comply with the same restrictions and obligations as are imposed on Contractor by this Section.

17.7.4 Press Releases. Except as required by the Contract, Contractor will not make any press releases, public statements, or advertisement referring to the Project or the engagement of Contractor as an independent contractor of Owner in connection with the Project or release any information relative to the Project for publication, advertisement or any other purpose without the prior written approval of Owner.

17.7.5 Public Information. Owner strictly adheres to all statutes, court decisions and the opinions of the Texas Attorney General with respect to disclosure of public information under the *Texas Public Information Act* ("TPIA"), Chapter 552, *Texas Government Code*. In accordance with Section 552.002 of TPIA and Section 2252.907, *Texas Government Code*, and at no additional charge to Owner, Contractor will make any information created or exchanged with Owner pursuant to this Contract that is not otherwise exempt from disclosure under TPIA available in a format reasonably requested by Owner that is accessible by the public.

17.8 Domestic Iron and Steel Requirement. Pursuant to Sections 2252.201-2252.205 of the Government Code, Contractor shall require that any iron or steel product produced through a manufacturing process and used in the Project is produced in the United States will require that the bid documents provided to all bidders and the contract include this same requirement.

End of U.T. System Uniform General Conditions

REVISIONS

DATE	REVISED	INITIALS
8-23-2013	2010 Uniform General and Supplementary Conditions merged into and Reissued as new document: 2013 Uniform General Conditions for UT System Building Construction Projects (UTUGCs); *Special Conditions* and *Supplementary General Conditions* deleted from Definitions; *Owner's Special Conditions* added to Definitions; Para. 3.3.11, *Indemnification*, moved to new Para. 3.4; Para	ems

	5.2.2.1.4 added Asbestos Transportation Insurance Coverage; Para. 5.2.2.1.7 added Umbrella Insurance Coverage; Para. 13.7, *Certification of No Asbestos Containing Material* moved to renamed Article 16 and revised; Article 15, *Dispute Resolution*, revised; Existing Article 16, *Miscellaneous*, re-numbered as Article 17.	
10-29-15	Added Section 17.5 regarding 179D Benefit Allocation	mgm
11-12-15	Art. 11.11, changed reference from 16.4 to 17.4	mgm
06-14-18	Para. 1.25, *Owner*, definition changed; Para. 3.2.1.1, *Site Visits*, reference to D/B Contract added; Misc. typos and formatting errors corrected; New Para. 17.6, *Force Majeure* and Para. 17.7, *Confidentiality*, added.	Ems
06-20-18	Para. 17.8, *Domestic Iron and Steel Requirement*, added	ems

EXHIBIT B

OWNER'S DIVISION 00 AND DIVISION 01 SPECIFICATIONS

Section 00 25 00 Attachment A Attachment B Attachment C	Owner's Special Conditions Prevailing Wage Determination Facilities Planned Utility Outage Policy Project Sign Layout
Section 01 31 00	Project Administration
Section 01 32 00	Project Planning and Scheduling
Section 01 35 16	Alteration Project Procedures
Section 01 35 25	Owner Safety Requirements
Section 01 45 00	Project Quality Control
Section 01 77 00	Project Close-out Procedures
Section 01 78 39	Project Record Documents
Section 01 78 46	Maintenance Materials
Section 01 79 00	Demonstration and Training
Section 01 89 23	Site HVAC Utilities Performance Requirements
Section 01 91 00	General Commissioning Requirements

SECTION 00 25 00 – OWNER'S SPECIAL CONDITIONS

PART 1 - GENERAL

1.01 RELATED DOCUMENTS

A. Drawings and general provisions of the Contract, including General Conditions and Division 01 Specification Sections, apply to this Section.

B. Specifications throughout all Divisions of the Project Manual are directly applicable to this Section, and this Section is directly applicable to them.

C. The Contractor's attention is specifically directed, but not limited, to the Uniform General and Supplementary General Conditions for University of Texas System Building Construction Contracts (UGC) for other requirements.

D. Attachment "A" (To Owner's Special Conditions) – Minimum Wage Rate Determination. Pursuant to the UGC, the attached schedule identifies the Prevailing Wage Rate determination as applicable to the Project location.

E. Attachment "B" (To Owner's Special Conditions) – Facilities Planned Utility Outages Policy.

F. Attachment "C" (To Owner's Special Conditions) - Project Sign Layout. [May not be applicable to all Projects].

G. Attachment "D" (To Owner's Special Conditions) - Bastrop Visitation and Tour Policy Statement and Medical Documentation Requirements. [Applicable to Bastrop Projects only].

1.02 SUMMARY

A. Terms and conditions set forth in this document are for the Contractor only, and are valid regardless of the project delivery method. For Construction Manager at Risk or Design/Build, the final version of the document shall be confirmed by the Owner, and included by the Construction Manager or Design/Build Contractor in the Guaranteed Maximum Price Proposal. For projects for which the construction phase is divided into multiple stages, these Owner's Special Conditions shall be reviewed, updated as warranted, and resubmitted with GMP Proposal associated with that stage of the construction work.

1.03 REFERENCE STANDARDS

A. The latest published edition of a reference shall be applicable to this Project unless identified by a specific edition date.

B. All reference amendments adopted prior to the effective date of this Contract shall be applicable to this Project.

C. All materials, installation and workmanship shall comply with all applicable requirements and standards.

1. Texas Medical Center Architectural Standards and Texas Medical Center Stormwater Management Design Guidelines are applicable to all Projects located within the Texas Medical Center.

2. Owner's underwriter requirements are applicable to all Projects.

1.04 DEFINITIONS

A. The term “Owner’s Project Manager” as used throughout the Contract Documents means an individual authorized by the Owner to administer the Project.

B. Outage - A temporary disruption of normal operation or use of utilities, sidewalks, parking areas, driveways or facility access.

C. Planned Utility Outage - An event that can be foreseen and has a plan of action in place to accomplish specific tasks during a utility outage.

D. Utility - Any service provided by an outside source or manufactured in house (gas, water, electricity, fire suppression water, telecommunications, data systems, building automation systems, fire alarm systems, etc.) which facilitates building operations.

E. The terms “outage” and “shutdown” are used interchangeably throughout the Contract Documents.

F. Work Day - A day in which work is planned, excluding weekends and holidays.

G. The terms “work day” and “business day” are used interchangeably throughout the Contract Documents.

H. Normal working hours are considered as work being performed between 6:00 A.M. and 6:00 P.M. Monday through Friday, excluding holidays.

I. The terms “normal hours” and “regular hours” are used interchangeably throughout the Contract Documents.

J. Weather Day – A “weather day” is a day on which the Contractor’s current schedule indicates Work is to be done, and on which inclement weather occurs and resultant site conditions or inaccessibility to the site prevent the Contractor from performing five hours of Work associated with the Project’s critical activities during normal working hours.

1.05 OWNER’S RIGHT OF OCCUPANCY

A. The Owner may occupy or use all or any portion of the Work following Substantial Completion, or at any earlier stage of completion. Should the Owner wish to use or occupy the Work, or part thereof, prior to Substantial Completion, the Owner’s Project Manager will notify the Contractor in writing and identify responsibilities for security, maintenance, and insurance.

B. Work performed on the premises by third parties on the Owner's behalf does not constitute occupation or use of the Work by the Owner for purposes of this Article.

C. All Work performed by the Contractor after occupancy, whether in part or in whole, shall be at the convenience of the Owner so as to not disrupt Owner’s use of, or access to occupied areas of the project.

D. Contractor shall follow the Planned Utility Outage Procedure specified within this section when performing Work affecting any occupied facility.

1.06 MINIMUM WAGE RATE DETERMINATION

A. The Contractor shall comply with all requirements of Texas Government Code Chapter 2258, Prevailing Wage Rates.

B. Wage rates identified in Attachment “A” (To Owner’s Special Conditions) are titled “Prevailing Wage Determination, dated December 31, 2009.

C. The Owner may verify wage rate compliance in the field by interviewing workers. The Contractor shall assist the Construction Inspector (CI) with this task, including providing translation for non-English speaking workers.

1.07 WEATHER DAYS

A. Weather days are excusable delays. When weather conditions at the site prevent work from proceeding, immediately notify the Owner’s Project Manager for confirmation of the conditions. At the end of each calendar month, submit to the Owner’s Project Manager a list of Weather Days occurring in that month along with documentation of the impact on critical activities. Based on confirmation by the Owner’s Project Manager, any time extension granted will be issued by Change Order. If the Contractor and Owner cannot agree on the time extension, the Owner may issue a Unilateral Change Order for fair and reasonable time extension.

1.08 SEPARATE CONTRACTS

A. As provided in the UGC, the Owner may award other contracts for other portions of the Project.

PART 2 - PRODUCTS

2.01 GENERAL

A. All materials shall meet or exceed all applicable referenced standards, federal, state and local requirements, and conform to codes and ordinances of authorities having jurisdiction.

2.02 ALTERNATES (*NOT USED*)

2.03 OWNER’S SPECIAL CASH ALLOWANCES (*NOT USED*)

2.04 BUILDERS RISK ENDORSEMENTS

A. For Coverage of Existing Building Structures:

1. Contractor shall include an endorsement on the Builders Risk Insurance policy to provide coverage for the existing building structure(s), including its/their contents, as described below. Coverage shall be in the amount equal to either $5 million or the estimated replacement value of the existing building structure and its contents, whichever is less.

2. The purpose of this coverage is to fund the $5 million deductible under the Owner's existing property insurance policy which addresses the risk and possible cost of claims to repair damage to existing structure(s) (this purpose should be explained to the Builders Risk Insurance carrier when requesting the quote). The existing building structure(s) to be covered is the **LEGGETT JONES RESEARCH BUILDING (BRB) AND BATES FREEMAN (BF)** building, and its estimated building replacement value is **$95,010,646**. Its estimated contents value is $**25,195,344**.

2.05 PROJECT COMMUNICATIONS PLAN

A. Depending upon the project, the Owner may develop a Project Communications Plan to inform the Owner's faculty, employees, patients, visitors, and others concerning construction activities affecting them. Contractor shall participate and support this effort as required by Owner. Typical support by Contractor may include attendance at communications meetings, preparation of graphic and narrative construction impact updates, and the furnishing of targeted signage.

2.06 PROJECT SIGNAGE

A. For new construction, the Contractor shall provide signage in accordance with the Project Communications Plan and construct and erect one (1) Project sign on the Site in a location designated by the Owner. The sign shall be constructed as instructed by the Owner. Refer to Attachment "B" (To Owner's Special Conditions).

B. The Contractor shall submit a one-quarter-scale shop drawing of the sign, including all lettering, to the Owner for approval prior to installation. The sign shall remain the property of the Owner, and upon Final Completion, the Contractor shall remove the sign and deliver it to a location designated by the Owner.

C. For renovation projects, signage shall be in accordance with the Project Communications Plan or as directed by the Owner.

D. All hazard warning signage shall be OSHA 29 CFR Part 1926 compliant. All signs shall be prominently displayed at all entrances to the Site. Postings must be constructed of a durable material that will resist wear and damage.

E. Additional Contractor or Subcontractor signs or advertisements shall not be erected without the Owner's written approval.

2.07 TEMPORARY WATER

A. The Contractor shall provide temporary lines for all water required during the Project and shall make arrangements with the Owner's Administrative Facilities and Campus Operations Department for water service. This shall include all means of conveying and the necessary metering devices. In lieu of temporary connections, with the Owner's approval, the Contractor may make permanent connections and such may serve for the construction period.

B. In the event water is not available at the Site from the Owner's existing distribution system, the Contractor shall negotiate with the local distributor for water and pay all fees and rates required by the local water utility.

2.08 TEMPORARY POWER AND LIGHTING

A. The Contractor shall make arrangements with the Owner or the local utility company for temporary construction power. If power is available only through the Owner's system, the Contractor may energize the permanent power system in the building only when approved by the Owner.

B. The Contractor shall provide adequate lighting about the Site for security, inspections of excavations, night shift work should such occur, and shall also provide adequate temporary interior lighting throughout the building enclosure to facilitate quality workmanship and appropriate inspection conditions.

C. Contractor shall ensure, and shall use emergency power equipment and connections if necessary to ensure, adequate lighting for egress and life safety.

2.09 TEMPORARY MECHANICAL SERVICES

A. If temporary heating, cooling, ventilation or humidity control equipment is required for protection of the Work or for implementation of indoor air quality measures, the Contractor shall provide Owner-approved equipment and proper operation such that no Work shall be damaged or life safety compromised.

B. All equipment and filters shall be maintained in good operation and all filters and controls shall be changed as a result of damage or expiration to ensure acceptable air quality. If necessary, all equipment must have current certifications.

C. After the permanent mechanical equipment has been installed and connected to the local chilled water and steam distribution systems, the equipment may be operated by the Contractor to heat or cool the building if acceptable to the Owner. Contractor must flush and clean all new mechanical piping systems before connecting to local systems.

D. During operation of the mechanical equipment, prior to achieving Substantial Completion, the Contractor shall keep the mechanical equipment in good operating condition, properly maintained, including cleaning and changing of all filters. New, non-construction filters shall be installed prior to the Owner’s acceptance of the mechanical equipment. The warranty period shall start for the respective equipment as delineated in the UGC.

2.10 REMOVAL OF TEMPORARY FACILITY

A. When a temporary facility is no longer needed for the proper conduct of the Work, the Contractor shall completely remove it from the Project and shall repair or replace any material, equipment, or finished surface damaged in doing so.

2.11 PROJECT PARKING

A. Contractor is responsible for securing adequate parking for Contractor’s employees.

PART 3 - EXECUTION

3.01 PARTNERING (*NOT USED*)

3.02 CONTRACTOR SITE ACCESS AND LIMITS OF CONSTRUCTION

A. Upon authorization to mobilize, the Contractor shall submit a plan layout showing project logistics and site laydown. This is to be submitted for Owner review a minimum of 4 weeks prior to the start of construction or during the preconstruction meeting, whichever is sooner.

B. All Project personnel shall confine and limit their work and use of the Site to those areas within the defined limits of construction. All public and University rules, laws and requirements shall be obeyed and enforced by the Contractor. No tools, construction vehicles, or construction material other than those in transit, shall be permitted beyond the Site limits of construction, including Owner's existing mechanical, plumbing, and electrical rooms, equipment rooms, and storage rooms.

C. All campus roads, drives, and fire lanes as well as all sidewalks and pedestrian routes, other than those specifically indicated to be in the Contractor's area of control, must be kept open at all times. The Contractor shall proactively schedule and obtain security clearance for all significant material deliveries, vehicle traffic, street closures, cranes, concrete trucks, etc., through and around the campus and Site.

3.03 PROJECT SURVEYING

A. The Contractor shall employ an experienced employee to document all existing conditions and submit all potential discrepancies 6 weeks prior to the start of construction. When the Contractor starts construction, the contractor is accepting all existing conditions as is and deems them to be accurate/ acceptable to proceed with construction without any additional changes/ costs.

1. As the Work progresses, the Contractor shall lay out partitions on the floor in exact locations as a guide to all contractors and trades.

2. Before ordering any materials or doing any Work, the Contractor or appropriate Subcontractor shall verify and be responsible for the correctness of all measurements. No extra charge or compensation shall be allowed on account of difference between actual dimensions and the measurements indicated on the drawings. Any differences, which may be found, shall be submitted to the Architect/Engineer for consideration before proceeding with the Work.

3.04 ON-GOING CAMPUS OPERATIONS

A. The Project is surrounded by and/or adjacent to continuously functioning campus facilities, including patient care, academic, and research efforts. The Contractor shall make every effort to avoid disruptions to ongoing campus activities and to maintain a safe environment for patients, students, faculty, and staff in the areas adjacent to the Project.

B. The Contractor shall obtain all Owner's in-house approvals and permits. Operation of utilities and building systems must not be interrupted except when scheduled and approved in advance through established channels. The Contractor should be always mindful and proactive with regard to containment of noise, fumes, dust and debris.

3.05 CONTRACTOR'S RESPONSIBILITY OF THE PROJECT WORKFORCE

A. The Contractor is responsible for the actions of the entire Project workforce, including, but not limited to, subcontractors' and suppliers' employees, whenever they are on the campus. The Contractor shall submit a plan for identifying and controlling all workers, and for management of personnel records, including payroll records. Identification badges for workers, busing of workers from remote parking lot(s), written and verbal reminders to workforce of appropriate behavior and avoidance of campus facilities, and publishing of established access and egress routes for vehicular and pedestrian traffic are required, as a minimum, in order to maintain control of the work force.

1. Unacceptable behavior on the part of a worker anywhere on campus, including parking lots, the Site, and the accessing route(s) through the Site and through the campus, or failure to obtain parking permits, or traffic violations while on campus may lead to cancellation of any associated parking. Identifiable offending worker(s) shall be permanently removed from the Project.

2. Harassment of any person, whether a patient, student, faculty, staff, or visitor to the campus, is strictly forbidden. Harassment includes any action such as jeering, whistling, calling-out, staring, snickering, making rude or questionable comments, or similar behavior. Identifiable offending worker(s) will be removed from the Project.

3.06 SECURITY

A. The Contractor is responsible for security of the Project. The University of Texas Police Department will not provide security for the Contractor's areas unless under Project-specific agreement and terms of compensation.

B. The Contractor shall secure the Site at nights and weekends, or when no work is being performed, to prevent the entry of unauthorized personnel. Locks shall be of an approved type and have special keying as required by the Owner (Green Construction Key Core). Keys for all door locks shall be made available to The University of Texas Police Department. All doors accessing the construction site shall be properly latched and have closers to maintain closed doors at all times. All doors accessing the construction site shall have MD Anderson standard construction signage, provided by Owner's Project Manager, to ensure that only authorized construction personnel access the site.

C. The Contractor shall not retain the services of outside guard or law enforcement services in connection with Work on campus without the specific prior written approval of the Chief of The University of Texas Police Department.

3.07 PROTECTION OF WORK

A. The Contractor shall properly and effectively protect all materials and equipment furnished during and after installation. Building materials, Contractor's equipment, etc., may be stored on the premises, but the placing of it shall be within the construction fence. When any room in the building is used as a shop, store room, etc., the Contractor shall be held responsible for any repairs, patching, or cleaning arising from such use. Contractor shall protect and be responsible for any damage to Contractor's Work or material, from the date of the agreement until the final payment is made, and shall make good without cost to the Owner, any damage or loss that may occur during this period. The Contractor shall handle all material as directed, so that the Architect/Engineer's representative may inspect it. All material affected by weather shall be covered and protected to keep it free from damage while being transported to the Site and while stored on the Site.

1. During the execution of the Work, open ends of all piping and conduit, and all openings in equipment shall be closed when Work is not in progress, and shall be capped and sealed prior to completion of final connections, so as to prevent the entrance of foreign matter.

2. All heating, ventilating, plumbing and electrical equipment shall be protected during the execution of the Work. All ductwork and equipment shall be sealed with heavy plastic and tape to prevent build-up of items such as dust, mold, and debris.

3. All ductwork and air handling mechanical equipment shall be wiped down with a damp cloth immediately before installation to ensure complete removal of accumulated dusts and foreign matter.

4. All plumbing fixtures shall be protected and covered so that no one can use them. All drains shall be covered until placed in service to prevent the entrance of foreign matter.

3.08 PLANNED UTILITY OUTAGE PROCEDURE

A. The Contractor shall not activate or de-activate any campus system, or component of any such system, without express written direction from the Owner.

B. Contractor shall schedule and obtain facilities approval for any necessary outage of campus utilities planning for a minimum of fifteen (15) work days in advance through the Owner's Project Workspace utility outage platform to process all outage requests. All outages that would impact adjacent occupied spaces shall be performed outside the normal working hours or as determined by the Owner.

3.09 NOISE CONTROL

A. Contractor shall coordinate equipment locations and timing or sequence of work operations so as to avoid conflict with the Owner's continuing use of adjacent buildings and/or avoid any interference with Owner's scheduled meetings, events, or business activities. This is to be coordinated and communicated during the preconstruction meeting.

3.10 CUTTING, PATCHING, AND INSTALLATION OF SLEEVES

A. If cutting and/or patching of holes or openings is required for the execution of the Work, the Contractor shall consult with the Architect/Engineer prior to the commencement of any cutting and/or patching. Contractor shall leave all chases, holes, or openings straight, true, and of proper size as may be necessary for the proper installation of Work.

1. No excessive cutting of the structure shall be permitted, nor shall any piers or other structural members be cut without the written approval of the Architect/Engineer. After such Work has been installed, the Contractor shall carefully fit around, close up, repair, patch, and point-up as directed to the entire satisfaction of the Architect/Engineer.

2. All cutting and patching for utility penetrations shall be done carefully, with proper tools by qualified workers, without additional cost to the Owner. The Contractor shall build into the Work, as indicated on the Plans and/or Specifications, any and all items furnished by others. Cutting and repairing of work in place, as a result of negligence by the Contractor, shall be paid for by the party at fault.

3. The Work performed within each Section of the Specifications, unless otherwise indicated in the Plans and/or Specifications, includes all cutting, patching, and digging for work in that trade section required for proper accommodations of work of other trades. Execute such work with competent workers skilled in trade required for restoration. Contractor shall arrange and pay for cutting and patching required for installation of Contractor's Work.

4. Contractor shall seal penetrations through all rated partitions, walls and floors with U.L. tested assemblies to provide and maintain a rating equal to or greater than the partition, wall or floor. In addition, Contractor shall seal penetrations through all floors to provide and maintain a watertight installation.

3.11 ASBESTOS ABATEMENT

A. In the event the Contractor encounters material reasonably believed to be asbestos at the Site, the Contractor shall immediately stop work in the area affected and report the condition to the Owner. If in fact the material is asbestos and has not been abated, the Contractor shall not resume the non-asbestos-related Work in the affected area until the asbestos has been abated.

B. The abatement action may be performed in any of three ways, as the Owner may decide. The Owner may perform the abatement by Owner's own forces, or the Owner may contract with a third party to perform the abatement, or the Contractor may perform the abatement by an appropriate means acceptable to the Owner such as performing the Work through Contractor's own employees if they are appropriately certified or by hiring an abatement subcontractor.

C. If the Contractor is to perform the abatement, the Owner and the Contractor will negotiate a change order in accordance with the contract terms relative to extra work. In such a case, the Owner specifically agrees that the cost of any special comprehensive general liability insurance that may be required relative to the abatement Work will be considered a direct cost of the extra work, on which, like the other direct costs, the Contractor will be allowed to add the applicable markup per the UGC.

3.12 CONTRACTOR LICENSURE

A. Contractor shall ensure that a Master Plumber licensed with the State of Texas directly supervises all plumbing Work. At least one plumber holding a State of Texas journeyman license shall be present at each Site during any plumbing Work.

B. Contractor shall ensure that Contractor's mechanical subcontractor is licensed with the State of Texas to install all HVAC Work.

C. Contractor shall ensure that a Master Electrician licensed with the State of Texas directly supervises all electrical Work. At least one electrician holding a State of Texas journeyman license shall be present at each Site involving Electrical Work.

3.13 SAFETY PRECAUTIONS AND PROGRAMS

A. MD Anderson Environmental Health and Safety (EH&S) has the authority to take intervening action in the event it deems patient, visitor, or staff of MD Anderson are in danger. Contractor shall adhere to requirements stated in Section 01 35 25 - Owner Safety Requirements.

B. Contractors shall familiarize themselves with, receive required training on, and abide by all policies and procedures of MD Anderson and any governmental body [i.e. NFPA, OSHA, EPA, TDLR (Texas Department of Licensing and Regulation), TCEQ (Texas Commission on Environmental Quality), etc.] having authority to control the manner and/or methods of completing the tasks contained in the Contract.

3.14 TEST, ADJUST, AND BALANCE

A. Owner may hire a Test, Adjust, and Balance firm. If Owner directly hires a Test, Adjust, and Balance firm, Contractor shall support the firm's efforts to perform work as required.

3.15 MISCELLANEOUS

A. All gas lines that are involved with the Project must have ends capped with proper cap and sealant, even if valves are locked off.

B. Contractor shall install temporary equipment in such a manner that finish work will not be damaged by smoke, falling mortar, concrete, or other causes. Location and arrangement of temporary equipment shall be subject to the approval of the Owner's Project Manager.

C. Change Room Facilities:

1. Where workers are required to change clothes and wear special protective clothing to work with toxic or dangerous substances, an appropriate facility for decontamination, separate from other sanitary and washing accommodations shall be provided. In these cases, change room facilities shall be duplicated and storage shall be provided for protective clothing in one room and for personal clothing in the other.

2. Protective clothing and personal clothing shall not come into contact with each other or be stored in the same facilities. Protective clothing and work clothing, which may have become wet by the process of decontamination, must be stored in a separate, well-ventilated area.

3. Change rooms shall be gender separated and provided with inside and outside locking mechanisms.

3.16 SITE AND AREA MAINTENANCE

A. A thorough cleanup of the Site and the Site's surroundings is required no less than once per day or more often as directed by the Owner. Contractor shall be responsible to ensure that the debris and trash resulting from site operations are removed from the building and the property on a daily basis. Solid debris, such as brick bats, mortar and plaster droppings, may not be dumped on the grounds about the Site. All combustible material including scrap from lumber, crating, excelsior, paper, and similar types of trash shall be removed from the building site on a daily basis. Trash shall not to be allowed to accumulate.

B. The Contractor shall not allow food to be consumed or food wastes to accumulate at the Site in an effort to eliminate pests and insects. Coordinate with Owner Representative for locations to consume food.

C. Contractor is required to ensure that the spaces adjacent to the construction space is clean at all times to not impact operations outside of the construction boundary.

3.17 OPERATING AND MAINTENANCE MANUALS

A. Certain requirements of the UGC are supplemented by Section 01 77 00 – Project Closeout Procedures.

3.18 RECORD DOCUMENTS

A. Certain requirements of the UGC are supplemented by Section 01 77 00 – Project Closeout Procedures.

3.19 SHOP DRAWINGS AND SUBMITTALS

A. Certain requirements of the UGC are supplemented by Section 01 31 00 – Project Administration.

ATTACHMENT "A"
(Owner's Special Conditions)
MINIMUM WAGE RATE DETERMINATION

The University of Texas System is the contracting agency for this construction project. The following statute requires the contracting agency to specify the generally minimum rates of wages in contracts that are bid.

Government Code 2258
"Construction of Public Works in State and
Municipal or Political Subdivisions; Prevailing
Wage Rates to be maintained"
and
The Uniform General Conditions
for University of Texas System Building Construction Contracts

Pursuant to the requirements of this statute, we have determined that the following rates of wages are paid to various classifications of workers in the locality of this project.

Total hourly compensations to each worker must equal or exceed the minimum wage rates stated in the following attachment. Contributions by a worker toward health, pension, vacation, and the like are part of the worker's pay; contributions by the employer are not. Any dollar amounts shown in columns for health, pension, and vacation may be paid either in cash or in kind. Workers in classifications where rates are not identified shall be paid not less than the general minimum rate of "laborer" for the various classifications of work therein listed.

All hours of work over 40 hours per week are overtime and will be compensated at the rate of 1 and ½ times the regular wage.

Trainees/helpers, where not otherwise specified above, may be compensated at a rate determined mutually by the worker and employer, commensurate with the experience and skill of the worker but a rate not less than 60% of the journeyman's wage or less than the Laborers (General) rate. At no time shall a journeyman supervise more than two of apprentices, trainees or helpers. All apprentices/trainees/helpers shall be under the direct supervision of a journeyman working as a crew.

ATTACHMENT "A"

PREVAILING WAGE DETERMINATION

HOUSTON-GALVESTON AREA

The University of Texas System
Office of Facilities Planning and Construction

Date: December 31, 2009
Construction Type: Building
Area: Houston-Galveston

Building Construction Trade Classification	Prevailing Wage Rate (1)
Carpenter	$14.38
Concrete Finisher	$14.63
Drywall/Ceiling Installer	$14.00
Electrician	$16.00
Elevator Mechanic	$23.61
Fire Proofing Installer	$13.88
Flooring Installer	$13.63
Glazier	$9.00
Heavy Equipment Operator	$13.25
Ironworker	$17.00
Laborer	$10.00
Light Equip Operator/Driver	$13.88
Mason/Bricklayer	$18.00
Painter	$14.25
Pipefitter	$14.87
Piping/Ductwork Insulator	$15.00
Plumber	$18.06
Roofer	$11.00
Sheetmetal Worker	$17.75
Sprinkler Fitter	$15.40
Tile Setter	$13.50
Waterproofer	$13.63

(1) Wages shown are for entry level, minimum wages for each classification and do not include fringe benefits

Unlisted classifications needed for work not included within the scope of the classifications listed may not be added after award. The job classifications are not inclusive of all possible trades on the construction project.

It is the responsibility of the contractor to classify the worker in accordance with the published classifications, and demonstrate that workers are paid commensurate with determined rates.

THE UNIVERSITY OF TEXAS
MD Anderson Cancer Center
Making Cancer History®

UTMDACC INSTITUTIONAL POLICY # ADM1131

FACILITIES PLANNED UTILITY OUTAGES POLICY

PURPOSE

The purpose of the policy is to define roles and responsibilities for requesting, coordinating, scheduling, and executing Planned Utility Outages.

POLICY STATEMENT

It is the policy of The University of Texas MD Anderson Cancer Center (MD Anderson) to establish and maintain a consistent process for requesting, coordinating, and executing Planned Utility Outages.

SCOPE

This policy applies to all faculty, trainees/students, and other members of MD Anderson's workforce and addresses MD Anderson-owned campus utilities systems and Utility systems in rented or leased property under the responsibility of MD Anderson (*e.g.,* life safety, fire alarm systems).

Compliance with this policy is the responsibility of all faculty, trainees/students, and other members of MD Anderson's workforce.

TARGET AUDIENCE

The target audience for this policy includes, but is not limited to, all faculty, trainees/students, and other members of MD Anderson's workforce, including Facilities Management (FM) Project Managers, FM Operations and Maintenance (O&M) Staff, Contractors, and Stakeholders who request a Scheduled Utility Outage for:

- New construction.
- Renovation.
- Maintenance.

DEFINITIONS

Business Day: First full day of outage starts the clock for the timeline.

Contractor/Vendor: An individual or company hired to perform tasks on MD Anderson campuses but who does not receive wages directly from MD Anderson payroll.

Customer: Any faculty member, trainee/student, or other member of MD Anderson's workforce or any Contractor who may be affected by the Utility outage.

Energy Source: Any source of electrical, mechanical, hydraulic, pneumatic, thermal, or other energy.

Facilities Work Notification: A notification associated with Utility work or work in an area that customer operations will not be impacted by. Customers will notice fire alarm strobes and audible alarms.

FM Director: Facilities staff member responsible for managing a property/building and approving Utility outages affecting its operations, excluding fire detection and fire suppression outages.

FM Onsite Outage Manager: Facilities personnel responsible for managing the Planned Utility Outage execution. This person must be listed in the official outage e-mail notification.

FM Project Manager: Facilities personnel who manage construction/renovation projects.

FOC Outage Coordination Group: Facilities Management personnel responsible for guiding MD Anderson-approved personnel through the procedures outlined in this policy.

Hours of Operation: Outage coordinators will process Outage Requests from 6:30 a.m. - 3:30 p.m.

Large Project: A project that is estimated to have a significant number of outages during the course of the project.

Mission Area: Groups within Facilities Management that conducts technical investigations in clinical, research and administrative facilities spaces.

Outage Coordinator: Coordinates the FOC Outage Coordination Group.

Outage Request: A form that is used to collect pertinent information and to initiate the process for a planned/unplanned interruption of the normal/expected operation environment of the facility.

Outage Request System: A system that is used to collect and capture all data associated with the requisition and completion of a Planned/Unplanned Utility Outage.

Planned Utility Outage: A foreseen interruption of a Utility flow to an end user. Planned Utility Outages have a plan of action to accomplish specific tasks during the event and all parties have outlined end user affects.

Requestor: An MD Anderson workforce member or his/her approved designee who is authorized to input or generate Utility Outage Requests in the Utility outage system.

Scheduled Outage: An outage is considered "scheduled" whenever the outage coordinator sends the final e-mail notification of approval (e-mail includes the outage date/time and pertinent details).

Shop Response: An outage system document completed by the Technical Investigator that documents the impact and further defines the scope of the Utility outage.

Stakeholders: Facilities Management staff/clients/end users, including Contractors/Vendors, who have participated in the planning, implementation, and execution of a Utility outage or will be affected by the event.

Technical Investigator: A Facilities Management staff member who is responsible for investigating the impact of the Outage Request and preparing the Shop Response.

Unplanned Utility Outage: An unforeseen interruption that has occurred or is currently in progress relative to a Utility failure or building component breakdown. Unplanned outages are by nature urgent. There is no timeline compliance.

Utility: Any service provided by an outside source or manufactured in-house that facilitates building operations (*e.g.,* gas, water, electricity, fire suppression water, fire alarm systems).

Work Notification: An Outage Request that is downgraded that should not affect end users. Work Notifications could also function as a form of communication to inform end users and O&M of work going on in their areas.

PROCEDURE

1.0 Request Outage

1.1 The Requestor will submit a completed Outage Request form through the Outage Request System.

Note: Refer to the **Appendix A - Summary of Outage Schedule Procedure Timeline** for typical timelines for executing outages in all MD Anderson buildings based on the scope of the outage, as determined by the request description (initial level) and Shop Response (final level).

1.2 The Outage Coordinator will accept an Outage Request Form and ensure that it is forwarded to a Technical Investigator.

Note: A returned/rejected Outage Request Form must be re-submitted.

1.3 Mission Areas must generate a work order in the computerized maintenance management system (CMMS) and indicate “outage” as the Work Type, along with the most appropriate Asset Number for the associated equipment involved in the outage.

Note: Time and expenses must be assigned, as appropriate, to the work order.

1.4 Outage Requests received after 3:00 p.m. will be processed the next Business Day.

1.5 All unplanned outages must be captured in the outage database and have an associated work order.

1.6 All floor plans and drawings should be attached by Requestor if traffic flows are affected. Drawing will be required for Interim Life Safety Measures (ILSM) investigations.

2.0 Evaluate Outage

2.1 The Technical Investigator will determine the scope and impact of the Outage Request and make note if another craft / Shop Response is required for the outage in the Shop Response form.

2.2 The Technical Investigator will review historical outages for the affected equipment before the field investigation and will validate current conditions.

2.3 The Technical Investigator will complete and submit the Shop Response in the Outage Request System.

2.4 Environmental Health and Safety (EH&S) will review and respond to all Outage Requests that may impact life safety systems (*e.g.,* sprinkler, fire alarm, egress paths) and perform an ILSM evaluation.

2.5 The Outage Coordinator will perform an initial review for the terms “fire,” “emergency,” “egress,” and “life safety systems.” If any of these terms are present, the Outage Request will be forwarded to EH&S. The final ILSM assessment and plan will be determined by EH&S.

2.6 Project management is encouraged to provide dedicated contract staff for Large Projects to investigate (*e.g.,* Shop Responses) to expedite outages.

2.7 Work Notifications will be handled as follows:

A. The Outage Request will be turned into a Work Notification if the potential for impact to stakeholders or building tenants is non-existent.

B. The mission area’s Technical Investigator will complete an assessment of impacts on the Customer and building before indicating “No Impact” as a response to the Outage Coordinator.

C. If the Work Notification requires an interruption of Utility service, an outage will be implemented, per the proper procedure, to reduce risk to the Stakeholders and operations.

Examples of Utility Work Notifications include but are not limited to:

- Hot Taps (e.*g.,* domestic water).
- Turning off Energy Source to equipment that is not in service.
- “Hot” Electrical Work (*e.g.,* installing breakers or bus plugs in a hot panel or riser).
- Utilities that have redundant sources (*e.g.,* domestic water tanks, pumps, heat exchangers).
- Testing of systems (*e.g.,* fire detection systems, fire pump tests, fire alarm function testing).
- Load shed testing.
- Uninterrupted Power Supply (UPS) and equipment on UPS.
- Corridors.
- Driveways.

2.8 The Shop Response must include the possible impact description as well as a timeframe for restoration of Utility or work area. End users and O&M must be made aware of the possible impact in case of failure of redundant system/equipment. End user(s) and O&M must have some say of the date and time it may take place.

2.9 Lockout/tag-out and/or live work must be indicated in a check box on the Shop Response form.

3.0 Coordinate Outage

3.1 The Outage Coordinator will review the Shop Response(s) and establish the final level of the outage as well as the date and time for the outage after communicating and coordinating with the personnel impacted by the outage and consulting with group requesting the outage.

3.2 The Outage Coordinator will obtain approval from the FM Property Manager / Director for the final scheduled date and time of the outage.

Note: EH&S will approve fire alarms and fire sprinkler systems.

3.3 The Outage Coordinator will send the final Facility Outage Notification via e-mail of the approved outage to Stakeholders and Customers.

Note: This Facility Outage Notification e-mail makes the outage an officially Scheduled Utility Outage. The FM Onsite Outage Manager and their one up, FM PM and Contractor PM must be listed with proper contact information if applicable.

3.4 The Requestor will notify Contractors/Vendors when the outage schedule is official and will provide them with all the pertinent information.

For a complex outage, it is recommended that the Requestor and Contractor do a pre-outage walk-through to confirm that the outage will occur as scheduled.

3.5 The Outage Coordinator(s), Mission Area, and Stakeholders will meet, as needed, to discuss outages, review requested and Scheduled Utility Outages, and review the status of all Shop Response requests.

3.6 The Outage Coordinator schedules and executes a Planned Utility Outage.

3.7 FM and/or designated Contractor personnel will execute the outage.

3.8 The FM Director, and/or his/her designee, will approve the cancellation of the outage prior to the execution of the outage or the extension of the outage if appropriate.

3.9 The FM Onsite Outage Manager will notify the Facility Operations Center (FOC) (Monitoring Services) via radio or e-mail if the work has been completed.

3.10 The FOC or the Outage Coordinator will notify Stakeholders if an outage has been cancelled or extended.

3.11 The FOC will log completed and cancelled outages in the Outage Request system.

3.12 Outage coordinator will schedule outage only after all EH&S actions are completed. See Utility Outage Process Flow.

3.13 Fire and life Safety outages:

ILSM Shop Responses will not be required if the words “commission,” “inspection,” or “testing” are part of the description in the Outage Request. A new ILSM Shop Response will be required if the date and or time changes for the outage.

3.14 Pre-construction meetings should be held with O&M and Outage Coordination ASAP to assure that any predetermined outages list be communicated so that these outages may fall within Outage Scheduling Procedure Timeline.

3.15 A project event that affects Facility operations or an event that was not forecasted but still must be completed immediately to keep the project moving towards completion requires an

Outage Request. Some of these outages may be requested on short notice, but will be tracked and reflected in the monthly metrics report. (See **Appendix A - Summary of Outage Schedule Procedure Timeline**.)

4.0 Cancellations

4.1 If situations require the outage to be cancelled or rescheduled, the FM Project Manager / FM Director / FM on-site manager and/or their designee are responsible for cancelling an outage after it has been approved and before it is executed.

4.2 The FOC and Outage Coordinators will communicate cancellations as follows:

A. During normal Hours of Operation:

Outage Coordinator issues a cancellation notice under the direction of the FM Project Manager / FM Director or on-site manager one-up.

B. After normal Hours of Operation:

The FOC issues a cancellation notice under the direction of the FM Project Manager / FM Director / on-site manager one up.

Note: If outage is executed by a Contractor and the PM is not available, the Contractor should call the FOC with the outage number so the FOC may contact the affected parties.

C. All Stakeholders will be notified of the cancellation.

4.3 Reasons for cancellations:

A. Outage scope of work change after request has been submitted.

B. Incorrect information found on the original request. Location/Utility etc.

C. Operational need to cancel the outage.

D. Date or time change.

E. Weather.

Outage cancellation approval must be given by a one-up staff member, so the loss of time and preparation are considered for each outage.

4.4 ILSM-related Outages:

If a change in scope, date, time, Contractor, etc. is needed before the outage notification is e-mailed, the Outage Coordinator:

A. In the existing software:

- Makes changes to existing outage.
- Informs all who submitted Shop Response of the changes and asks if their Shop Response is still valid.
- Requests new ILSM (24-hour turn around).

B. In new software:

- Cancels existing outage.
- Informs all who submitted Shop Responses and asks if existing Shop Response is still valid. If so, copies and pastes form old outage to new outage. If not, requests new Shop Responses.
- Notifies FLSPM of original ILSM and requests new ILSM (24-hour turn around).

If a change in scope, date, time, Contractor, etc. is needed after the outage notification is e-mailed and:

C. Change was made by Contractor (*e.g.,* no show, late, wrong equipment):

The outage is cancelled, and a new outage must be requested according to policy timeframes as related to outage complexity.

D. Change was made by MDACC personnel (*e.g.,* O&M unavailable due to emergency):

The outage is cancelled, and a new outage must be requested with a three-day turnaround time.

4.5 Outage extensions:

Outage extensions must be verbally communicated to the FOC/Outage coordinators by the appropriate mission area or department authorized outage approver. The FOC/Outage coordinators will then notify all groups associated with this outage (via e-mail).

5.0 Unplanned Utility Outages

5.1 Requests and Shop Responses are requested immediately or soon after (when appropriate).

5.2 Life safety measures must be considered very early in this process, as soon as the FOC/Outage coordinators are contacted, so that they can send out an official notification to building tenants and EH&S for ILSM.

5.3 All unplanned outages must have a work order associated with them. Samples of unplanned outages include, but are not limited to:

A. A city-related Utility failure that affects MDACC facility(ies).

B. An unforeseen equipment failure that affects one or more building systems.

ATTACHMENTS/LINKS

Appendix A - Summary of Outage Schedule Procedure Timeline (Attachment # ATT1769).

Utility Outage Process Flow.

RELATED POLICIES

Interim Life Safety Measures Policy (UTMDACC Institutional Policy # ADM0210).

Lockout/Tagout of Energized Equipment Policy (UTMDACC Institutional Policy # ADM0229).

JOINT COMMISSION STANDARDS / NATIONAL PATIENT SAFETY GOALS

EC.02.05.01;
"The hospital manages risks associated with Utility systems." *Comprehensive Accreditation Manual for Hospitals (CAMH),* 2015.

LS.01.02.01;
The hospital protects occupants during periods when the Life Safety Code is not met or during periods of construction." *Comprehensive Accreditation Manual for Hospitals (CAMH),* 2015.

OTHER RELATED ACCREDITATION / REGULATORY STANDARDS

None.

REFERENCES

None.

POLICY APPROVAL

Approved With Revisions Date: 12/01/2015
Approved Without Revisions Date:
Implementation Date: 12/01/2015
Version: 12.0

RESPONSIBLE DEPARTMENT(S)

Environmental Health & Safety

Appendix A

SUMMARY OF OUTAGE SCHEDULING PROCEDURE TIMELINE

REF, PCPF, AFCO, FPDC, IT/Telecomm

This document illustrates a summary of the flow of action and a *typical* timeframe for executing outages in buildings with critical research, patient care, or administrative functions based on the level and scope of the outage.

1. Request Outage → **2. Evaluate Outage** → **3. Coordinate Outage** → **4. Schedule and Execute Outage** → **Complete Post Outage Activities**

Level 1 – Impacts ranging from "No effects to normal operations", to less than one-half of a building floor. Level 2 – Impacts ranging from one-half of a building floor to less than one-half of a building. Level 3 – Impacts ranging from one-half of a building, up to an entire / multiple buildings.		**LEVEL 1**	**LEVEL 2**	**LEVEL 3**
Step 1. REQUEST OUTAGE	**WHO TAKES ACTION**	**BUSINESS DAYS FOR MOST OUTAGES.**		
Complete, submit Utilities Outage Shutdown request.	Requestor	0	0	0
Accept outage, or return outage to requestor.	AFCO Outage Coordinator	1	1	1
Step 2. EVALUATE OUTAGE: Multiple crafts and possibly multiple Departments.				
Complete shop response. The shop response is used by the outage coordinator to determine the scope of outage impact.	Technical Investigator #1	2	3	5
Complete shop response. The shop response is used by the outage coordinator to determine the scope of outage impact.	Technical Investigator # 2	1	2	4
Complete shop response ILSM. The shop response is used by the outage coordinator to determine the scope of outage impact.		1	2	2
Complete shop response by the IT Information Technology. The shop response is used by the outage coordinator to determine the scope of outage impact.		1	2	2
Assign outage level based on the outage impact as determined in the shop response.	AFCO Outage Coordinator	0	0	0
Step 3. COORDINATE OUTAGE				
Determine preliminary outage scheduled date using shop response and negotiate preliminary outage date with key stakeholders.	AFCO Outage Coordinator	3	2	3
Additional time may be required to: 1) obtain a consensus from key stakeholders who do not agree with requested outage date; 2) escalate to the FM property manager / director and/or FM AVP; and 3) receive final approval from FM property manager / director.				
Step 4. SCHEDULE AND EXECUTE OUTAGE				
Notify all impacted personnel of approved outages via email with lead time for preparation of the outage. Conduct walk through of impacted area within 48 hours of outage, if feasible. Execute the outage.	AFCO Outage Coordinator, Requestor, Contractor or FM Onsite Outage Manager	1	3	3
ELAPSED BUSINESS DAYS for STEP 1 - REQUEST OUTAGE TO STEP 4 - SCHEDULE AND EXECUTION UTILITY OUTAGE. Note: *See step # 3 as additional time may be required if key stakeholders require a 7-10 day notice if their area is affected.*		10	15	20
COMPLETE POST OUTAGE ACTIVITIES				
* Monitoring Services is notified about early, extended, cancelled and/or completed outages by FM onsite manager. * Monitoring Services notifies via email all impacted customers and key stakeholders about early, extended, and/or cancelled outages. * Monitoring Services updates shift log with outage complete after FM onsite manager notifies FOC-Monitoring Services.	FM Onsite Outage Manager, Monitoring Services			

SECTION 01 31 00 - PROJECT ADMINISTRATION

PART 1 - GENERAL

1.1. RELATED DOCUMENTS

1.1.1. Contractor's attention is specifically directed, but not limited, to the Uniform General Conditions for University of Texas System Building Construction Contracts (UTUGCs) for other requirements.

1.2. SUMMARY

1.2.1. This Section provides Project administrative and procedural requirements for Contractor to supplement requirements defined in the UTUGCs.

1.3. DEFINTIONS

1.3.1. Capitalized terms used herein shall have the meanings set forth in the Agreement or the UTUGCs unless expressly defined herein.

1.3.2. *Owner's Project Manager (OPM)* means the individual assigned by Owner to act on Owner's behalf with respect to the day-to-day administration of the Project and the Contract Documents.

1.4. SUBCONTRACTS

1.4.1. Refer to the UTUGCs for requirements not identified in this Section. Contractor shall furnish to Owner a list of all Subcontractors to Owner as subcontracts are executed.

1.4.2. For all Projects enrolled by Owner in the UT System Rolling Owner's Controlled Insurance Program (ROCIP or OCIP), Contractor shall obtain each ROCIP enrolled Subcontractor's written acknowledgement that the Subcontractor is aware that the Project will use an OCIP and that the Subcontractor will participate in the program.

1.5. PREVAILING WAGE RATE

1.5.1. Contractor must comply with all aspects of the UTUGCs. Contractor shall require all workers to complete a "Worker Wage Rate Notification Form" before starting Work on the Project. Contractor shall maintain certified payrolls, for Contractor and all Subcontractors, at the Site throughout construction.

1.5.2. OPM may verify wage rate compliance in the field by interviewing workers, or otherwise. Contractor shall assist OPM with verification of wage rate compliance, including provisions for non-English speaking workers.

1.6. FLOW OF COMMUNICATIONS

1.6.1. Refer to the UTUGCs for requirements not identified in this Section.

1.6.2. Unless Owner expressly agrees otherwise, the Architect/Engineer (A/E) is responsible for document control and general Project administration and is the key contact for written communications. Owner's written instructions to Contractor may be issued through the A/E.

1.6.3. All Subcontractor correspondence shall be routed through Contractor. All written Contractor correspondence shall be directed to the A/E, with simultaneous copies to OPM. The actual parties for this Project will be confirmed at the Pre-Construction Conference.

1.6.4. ODR is the only party authorized to direct changes in the Work. Such direction may be communicated by the ODR through the OPM to Contractor. On behalf of ODR, OPM may issue written and/or oral instructions directly to Contractor.

1.6.4.1. All oral instructions must be issued by OPM, or in her or his presence, and shall be promptly confirmed in writing by Contractor. Any oral instructions or discussions with Subcontractors in the absence of Contractor are not contractual and are not binding on either party.

1.6.5. Per the UTUGCs, A/E may issue clarification and other information not affecting the Contract Sum or Contract Time by means of an A/E's Supplemental Instruction (ASI) form, or similar clarification form, which will be sequentially numbered. Both A/E and Contractor shall maintain a separate ASI register.

1.6.6. All Subcontractor Requests for Information (RFI) shall be submitted by and under cover of Contractor, who is to carefully review and ensure the completeness and appropriateness of the question, sequentially number each, and submit to the A/E with copies to OPM. Contractor and A/E may maintain separate RFI logs.

1.6.7. All Project correspondence shall include The University of Texas MD Anderson Cancer Center (MD Anderson) Project Number and Project Name in the title or reference.

1.6.8. Contractor shall process Application for Payments, Requests for Information, Changes, and Submittals as shown in Owner’s Pre-Construction Brochure.

1.7. CHANGED CONDITIONS

1.7.1. Refer to the UTUGCs for requirements not identified in this Section. If Contractor finds conditions at the Site to be materially different from that indicated in the Contract Documents, Contractor shall notify the A/E and OPM immediately, in writing, and prior to disturbing such conditions.

1.8. PROJECT CHANGES

1.8.1. Refer to the UTUGCs for requirements not identified in this Section 01 31 00.

1.8.2. Upon authorization by Owner, Owner or A/E will prepare and issue all changes to the Contract Documents affecting cost, scope and/or time as a formal Change Order on the standard University of Texas MD Anderson Cancer Center Change Order form. The Change Order may include separate change issues, identified as Change Proposals and field orders.

1.8.3. Contractor shall request a change in the Contract Sum, the Contract Time, or both by submitting a Change Order Request (COR) to Owner and A/E. In each COR, Contractor shall identify the reason for the requested change, the proposed adjustment to the Contract Time, and the proposed adjustment to the Contract Sum.

1.8.4. Owner may initiate a change in the Work via the issuance of a Proposed Change Order (PCO), which may be prepared by A/E and issued to Contractor for pricing. Contractor shall submit pricing to Owner within twenty-one (21) days and pricing shall be indicated on the standard Owner "Change in Work Cost Analysis" (Cost Analysis) form provided in the Pre-Construction Conference Brochure. Contractor may not include a PCO or a COR within a Change Order unless Owner has accepted the Contractor’s response to the PCO or the COR.

1.8.4.1. Contractor shall summarize all costs for each change at each level of Subcontractor and supplier by preparing the "Cost Analysis" form, and shall provide each Subcontractor's cost summary on separate "Cost Analysis" forms as backup.

Additional support documentation from both Contractor and each Subcontractor is encouraged, but such will not replace use of the standard form.

1.8.4.2. When Contractor believes it is entitled to a time extension, Contractor shall so state as part of Contractor's response to the PCO, including a justification for a time extension. Owner may grant time extensions only if a PCO affects the activities on the critical path of an Owner approved Work Progress Schedule; i.e., when the Work impacts Substantial Completion.

1.8.4.3. If Owner and Contractor cannot mutually agree upon a fair and reasonable cost and time settlement, Owner may: 1) Reject the quotation and void the PCO, 2) Issue instructions to Contractor to proceed on a time and material basis for a price to be determined later not to exceed a fixed maximum dollar and time, or 3) Issue a Unilateral Change Order.

1.8.4.4. OPM, acting on behalf of the ODR, may issue field orders directly to Contractor for minor changes to the Work, which can be negotiated in the field. Pricing backup is at the discretion of OPM, but when pricing backup is required for any field order, the pricing backup is to be outlined on the "Cost Analysis" form. When Owner and Contractor have signed the field order, the Work is authorized and the field order may be included in the next Change Order.

1.8.5. Request for payment for Change Order work may be submitted only after the Change Order has been fully executed.

1.9. CLAIMS FOR ADDITIONAL COST

1.9.1. Contractor shall timely and officially certify all claims for additional cost and shall specifically comply with all provisions of the UTUGCs to be considered valid. Contractor can make a claim for additional costs incurred.

1.10. LIQUIDATED DAMAGES

1.10.1. If assessed, Owner may withhold liquidated damages from progress payments beginning with the first payment after the adjusted date achieving Substantial Completion and continuing through any subsequent progress payments until all Work is complete. Owner may assess liquidated damages by deducting the liquidated damages from the Contract Sum or Guaranteed Maximum Price (GMP) Proposal through a unilaterally written deductive Change Order.

1.11. SITE USE ISSUES

1.11.1. Refer to the UTUGCs and to Owner's Special Conditions for site use requirements not identified in this Section. Contractor shall manage, coordinate, and direct the Work from the Site.

1.11.2. Contractor is responsible for actions of the entire workforce whenever the workforce is at the Site, or passing through campus to the Site. Harassment of any kind toward any person will not be tolerated; offending workers will be removed from the Project immediately and permanently.

1.11.3. Contractor shall provide and submit a program plan for worker orientation, identification of workers, and control of access to the Site. Any and all workers on the Project shall participate in this program before beginning Work on the Project. The program plan shall include, as a minimum:

1.11.3.1. An overview of Contractor's plan for instruction of Site rules and regulations to all employees who participate on the Project, including but not limited to safety, restricted use of Owner's facilities, parking, conduct/behavior, dress, sanitary facilities, security, etc.

1.11.3.2. Employee identification badges with a photograph of the employee, the employer, and employee's name. Badges shall be provided for all employees and produced by a system on Site. This identification shall be worn at all times while on the Site. Lack of an authorized identification badge shall be grounds for removal from the Site.

1.11.3.3. A detailed written plan indicating how Contractor proposes to control pedestrian and vehicular traffic into and out of the Site. Contractor shall provide a separate plan for normal working hours, nights, after normal hours, weekends, holidays, etc. This plan may be incorporated into Contractor's staging plan.

1.12. HISTORICALLY UNDERUTILIZED BUSINESS (HUB) PLAN

1.12.1. Refer to the Agreement, the UTUGCs and Owner's Rider 104; Policy on Utilization of Historically Underutilized Businesses, which is included as an Exhibit to the Agreement, for HUB requirements not identified in this Section.

PART 2 - PRODUCTS

2.1 SCHEDULING REQUIREMENTS

2.1.1 Refer to the UTUGCs and Section 01 32 00 – Project Planning and Scheduling for detailed scheduling requirements.

2.2 SHOP DRAWINGS AND SUBMITTALS

2.2.1 Refer to the UTUGCs for requirements not identified in this Section.

2.2.2 Submittal Procedures: Contractor shall transmit each item using Owner's standard format. Contractor shall identify the project by Owner's assigned project number, Contractor, Subcontractor and supplier. Contractor shall identify pertinent drawing sheet and detail number and specification section number as appropriate. Contractor shall transmit submittals to Owner and A/E as determined in the Pre-Construction Conference.

2.2.3 Contractor shall include a Safety Data Sheet (SDS) for any and all materials incorporated into the Project. Contractor shall ensure one (1) copy of the SDS attached to the submittal and one copy is kept in a file of SDS's for all materials at the Site. Contractor shall organize the file by the appropriate technical specification section.

2.2.4 If Owner does not assign a submittal tracking number through Owner's internet-based project management system, Contractor shall assign a tracking number to each submittal following a format to be established at the Pre-Construction Conference. The same tracking number with a numerical or alphabetical suffix will be used to identify re-submittals.

2.2.5 Submittal Product Data: Contractor shall collect and organize manufacturer's product data into a single submittal for each element of construction or system. Contractor shall include printed product data such as manufacturer's installation instructions, compliance with recognized trade association standards and testing agency standards, catalog data sheets, standard color charts, roughing-in diagrams and templates, standard wiring diagrams and performance curves. Where product data must be specially prepared because standard printed data is not suitable for use, Contractor shall submit as Shop Drawings.

2.2.6 Shop Drawings: Contractor shall submit newly prepared information that is drawn to accurate scale. Contractor shall highlight, encircle, or otherwise indicate deviations from the Contract Documents. Contractor shall not reproduce Contract Documents or copy standard information as the basis of Shop Drawings. Standard information prepared without specific reference to the Project is not acceptable as Shop Drawings.

2.2.6.1 Shop Drawings include fabrication and installation drawings, setting diagrams, schedules, patterns, templates and similar drawings. Contractor shall include at least the following information:

2.2.6.1.1 Dimensions.

2.2.6.1.2 Equipment service access area.

2.2.6.1.3 Identification of products and materials included.

2.2.6.1.4 Compliance with specified standards.

2.2.6.1.5 Notation of coordination requirements.

2.2.6.1.6 Notation of dimensions established by field measurement.

2.2.7 The burden of timeliness to complete the submittal process is on Contractor. Contractor shall allow sufficient time within the Work Progress Schedule for the A/E and Owner to review all submittals, including time for all re-submittals on any unaccepted/rejected submittals.

2.2.8 Contractor shall carefully examine all data submitted for approval and shall certify that the data has been carefully reviewed and found to be correct with respect to the Contract Documents.

2.2.8.1 Any deviation from the Contract Documents and the reason for the deviation shall be conspicuously noted on the submittal and the transmittal cover sheet. Contractor's failure to conspicuously note deviations and the reason for the deviation will void any action taken on the submittal.

2.2.8.2 All manufacturer's data contained within the submittal shall have all inapplicable features crossed out or deleted in a manner that will clearly indicate exactly what is to be furnished.

2.2.8.3 Equipment of larger sizes than shown, even though of a specified manufacturer, will not be acceptable unless it can be demonstrated that ample space exists for proper installation, operation, and maintenance.

2.2.8.4 Should the A/E, on initiating A/E's review, find the submittal unstamped or uncertified, non-responsive and/or incomplete, A/E shall return the submittal to Contractor immediately. Such returned documents will not be recognized as having been an official submittal.

2.2.9 Owner will not be responsible for payment of any item that has not been submitted and approved through the established submittal process.

2.2.10 Contractor should anticipate transmitting submittals electronically to Owner and A/E. Owner's internet-based project management system may be used for transmitting submittals; confirm with OPM. Paper hardcopies of submittals may be required; the exact number of paper hardcopies for distribution will be determined at the Pre-Construction Conference. Refer to Section 01 77 00 – Project Close-out Procedures for submission of approved submittals at Project close-out.

2.2.11 Samples: As required by individual Sections of the Specifications, Contractor shall submit full-size, fully fabricated Samples cured and finished as specified and physically identical with the material or product proposed. Samples shall include partial sections of manufactured or fabricated components, cuts or containers of materials, color range sets, and swatches showing color, texture and pattern.

2.2.11.1 Contractor shall mount, display, or package Samples in the manner specified to facilitate review by Owner and A/E. Contractor shall prepare samples to match the A/E's Sample, which shall include at least the following information:

2.2.11.1.1 Generic description of the Sample.

2.2.11.1.2 Sample source.

2.2.11.1.3 Product name or name of manufacturer.

2.2.11.1.4 Compliance with recognized standards.

2.2.11.1.5 Availability and delivery time.

2.2.11.2 Contractor shall submit Samples for review of kind, color, pattern, and texture, for a final check of these characteristics with other elements, and for a comparison of these characteristics between the final submittal and the actual product delivered and installed.

2.2.11.3 When variation in color, pattern, texture or other characteristics are inherent in the material or product represented, Contractor shall submit no less than three (3) multiple units that show approximate limits of the variations.

2.2.12 Refer to individual Technical Specification Sections for additional submittal requirements.

2.3 SUBSTITUTION PROCEDURES

2.3.1 Refer to the UTUGCs for requirements not identified in this Section.

2.3.2 The specified products used in preparing the Contract Documents establish minimum qualities. Substitutions must be at least equal to the minimum qualities for consideration by Owner as an acceptable substitution. The burden of proof of equality rests with Contractor. Owner retains sole authority for acceptance of substitutions.

2.3.3 Contractor shall submit all substitution requests within sixty (60) days of the Notice to Proceed with Construction and shall allow a minimum of twenty-one (21) days for review of each substitution by the A/E and Owner in addition to the requirements identified in Section 2.2 above. Contractor is solely responsible for allowing sufficient time for substitutions to be considered without affecting Contract Time.

2.3.4 Substitution requests shall include the name of the material or equipment for which it is to be substituted and a complete description of the proposed substitution, including drawings, performance and test data, and other information necessary for an evaluation. Documentation for substitution requests shall show compliance with the following, as applicable:

2.3.4.1 Statement indicating why specified product or fabrication or installation cannot be provided,

2.3.4.2 Coordination information, including a list of changes or modifications needed to other parts of the Work that will be necessary to accommodate proposed substitution.

2.3.4.3 Detailed comparison of significant qualities of proposed substitution with those of the Work specified. Include annotated copy of applicable specification section. Significant qualities may include attributes such as performance, weight, size, durability, visual effect, sustainable design characteristics, warranties, and specific features and requirements indicated. Indicate deviations, if any, from the Work specified.

2.3.4.4 Product data, including drawings and descriptions of products and fabrication and installation procedures.

2.3.4.5 Samples, where applicable or requested. Owner may require Contractor to provide Samples of both the specified item and the proposed item for comparison.

2.3.4.6 Certificates and qualification data, where applicable or requested.

2.3.4.7 List of similar installations for completed projects with project names and addresses and names and addresses of architects and owners.

2.3.4.8 Material test reports from a qualified testing agency indicating and interpreting test results for compliance with requirements indicated.

2.3.4.9 Cost information, including a proposal of change, if any, in the Contract Sum.

2.3.4.10 Contractor's certification that proposed substitution complies with requirements in the Contract Documents except as indicated in the substitution request, is compatible with related materials, and is appropriate for applications indicated.

2.3.4.11 Contractor's waiver of rights to additional payment or time that may subsequently become necessary because of failure of proposed substitution to produce indicated results.

2.3.5 Owner may base acceptance of materials and equipment on the supplier and/or manufacturer's published data and may be provisional subject to the submission of complete shop drawings and/or specifications indicating compliance with the Contract Documents. Owner’s acceptance of materials and/or equipment under this provision shall not be construed as authorizing any deviation from the Contract Documents, unless specifically directed in writing from Owner and/or A/E.

2.3.5.1 Contractor shall be solely responsible for all additional costs resulting from the review of any proposed substitution. Additional costs include direct and indirect costs that are not presented at the time of the substitution request and costs that become known after the review and approval of the substitution.

2.3.6 Should Owner accept a proposed substitution and should the substitute prove defective or otherwise unsatisfactory for the service intended within the guarantee period, Contractor shall replace the substitute with the material or equipment specified in the Contract Documents at no additional cost to Owner.

2.4 INITIAL APPLICATION FOR PROGRESS PAYMENT

2.4.1 Refer to the UTUGCs and Section 01 32 00 – Project Planning and Scheduling for requirements not identified in this Section.

2.4.2 Contractor may submit a request for a progress payment once per month. Such request shall be presented on Owner’s Application for Payment and Schedule of Values forms (refer to Attachment No. 1 and No. 2) supplemented by columnar continuation sheets, which represent updates to the original Contract Sum Schedule of Values.

2.4.3 Contractor shall keep Project accounting records on the basis of generally accepted accounting principles in accordance with cost accounting standards issued by the Federal Office of Management and Budget Cost Accounting Standards Board and organized by each Application for Payment period.

2.4.4 Prior to the submission of the first Application for Payment and within twenty-one (21) days of issuance of the Notice to Proceed with Construction, Contractor shall submit the following documents to the A/E, OPM, and Owner's Construction Inspector for review, using Owner's Standard Schedule of Values format.

2.4.4.1 Contract Sum or GMP Schedule of Values: Contractor shall submit a single document itemizing the breakdown of the Contract Sum, including general conditions, contingencies and allowances using Owner's Standard Schedule of Values format. Contractor shall submit a draft breakdown at least twenty-one (21) days prior to submitting the initial Application for Payment and such submittal shall be a condition precedent to the processing of the first payment application. Contractor shall submit subsequent draft copies of the Schedule of Values at least seven (7) days prior to formal submission of each monthly Application for Payment.

2.4.4.1.1 The Schedule of Values breakdown shall follow the trade divisions of the specifications and shall be itemized by submittal, floor, area, elevation or other building systems, as a minimum. The breakdown shall include a labor and material breakdown for each line item and be of such detail as may be required by Owner and/or A/E, but in general shall limit each line item to less than $100,000.

2.4.4.1.2 Commissioning activities shall be identified as a line item on the Schedule of Values in sufficient detail to allow for Owner's monthly review of progress.

2.4.4.1.3 No adjustment to the original detailed breakdown of a Schedule of Values line item shall be made once accepted by Owner and A/E. Once accepted, the breakdown will form the basis for all periodic payments.

2.4.4.1.4 For projects using construction manager-at-risk or design-build delivery, Contractor may adjust the detailed breakdown of a General Conditions Cost line item if the total amount for a General Conditions Cost line item exceeds one hundred percent (100%). A corresponding amount shall be deducted from another General Condition Cost line item(s) or the Construction Phase Fee to pay for the General Conditions Cost line item overage.

2.4.4.1.5 Contractor shall not use Subcontractor invoices/pay applications in lieu of submitting a Schedule of Values.

2.4.4.1.6 The breakdown shall anticipate future Change Orders and make provisions for incorporating all changes into the Schedule of Values listing. If issued, Change Orders shall be identified separately and shall itemize the GMP Change Orders, Change Proposals and/or field orders, which are incorporated into each Change Order for payment on a line-item basis as required by this section.

2.4.4.1.6.1 Payments shall not be made for work contained in unexecuted Change Orders.

2.4.4.1.7 For Projects for which the Contract Sum is developed through the submittal and acceptance of Guaranteed Maximum Price proposals, the process outlined above shall be repeated each time a subcontract is added to the monthly Schedule of Values.

2.4.4.2 Work Progress Schedule: Refer to Section 01 32 00 – Project Planning and Scheduling for all Work Progress Schedule requirements.

2.4.4.3 Submittal Register: Contractor shall provide Owner and A/E with a submittal schedule/register of all items requiring submittal review showing the items' anticipated submission dates and late finish dates for completion of the review process. The submittal schedule/register shall be incorporated with the Work Progress Schedule, and each shall be updated monthly and submitted to the A/E and Owner with each Application for Payment.

2.4.4.4 Equipment Matrix: Section 01 91 00 – General Commissioning Requirements requires a matrix of all operable devices and building system components be submitted to Owner. This matrix may be incorporated into equipment documentation required in Operating and Maintenance Manuals as indicated in Section 01 77 00 – Project Closeout Procedures.

2.4.4.5 Contractor is encouraged to integrate these documents to the extent practical to avoid duplication, both in initial setup and ongoing updates to each.

2.4.5 When Owner and Contractor agree to the Schedule of Values line item amounts, Contractor shall submit two (2) copies of the formal Application for Payment to the A/E, utilizing Owner's form, with original signatures of a duly authorized representative of Contractor and original notarization. Contractor shall furnish a certificate designating a person(s) who has authority to sign pay applications on behalf of Contractor if such is not an officer of the firm.

2.4.5.1 Contractor shall provide attachments to each month's payment request per the UTUGCs. Contractor should verify the number of copies of each attachment with Owner prior to submission.

2.4.5.1.1 Fully executed Application for Payment, which shall provide

2.4.5.1.1.1 Confirmation that Contractor is maintaining and has updated the Record Documents kept at the Site.

2.4.5.1.1.2 Contractor has provided Owner with updates to HUB Progress Assessment Report

2.4.5.1.2 Updated Submittal Schedule/Register.

2.4.5.1.3 Updated Work Progress Schedule.

2.4.5.1.4 Wage rate notification form for each member of the workforce not previously submitted.

2.4.5.1.5 Documentation of partial Release of Liens and Claims in accordance with the value of the monthly Application for Payment.

2.4.6 The formal monthly Application for Payments shall be first certified by the A/E and then submitted to OPM for signature and processing. Contractor may expect receipt of payment within thirty (30) days after OPM receives the formal Application for Payment.

2.5 MONTHLY APPLICATION FOR PROGRESS PAYMENTS

2.5.1 Refer to the UTUGCs and Section 01 77 00 – Project Closeout Procedures, for requirements not identified in this Section.

2.5.2 For regular monthly Applications for Payment, Contractor shall submit for review and approval a draft payment request to OPM and the A/E no less than seven (7) days prior to formal submission. Contractor shall be prepared to review the draft copy with Owner and the A/E. Failure to comply with the requirements outlined in section 2.4 above shall relieve Owner from Owner's obligation to make payments on any and all line items until Contractor meets all requirements.

2.5.2.1 Payments cannot exceed the Contract Sum, work in-place, or subcontract amounts as depicted on Schedule of Values line items.

2.5.2.2 Retainage shall not be used to cover Punchlist items.

2.5.3 Requests for payments in association with release of, or reduction in, retainage or completion of Work have additional requirements as outlined in the UTUGCs and Section 01 77 00 – Project Closeout Procedures.

2.5.4 Contractor's Application for Payment shall not become final and ready for formal submission for payment until the date OPM signs the Application for Payment indicating the Work for which Contractor is requesting payment in the Application for Payment has been reviewed and is acceptable, subject to the limitations set forth in the UTUGCs.

2.6 PROCUREMENT OF SUBCONTRACTS – CMR AND DB AGREEMENTS ONLY

2.6.1 As used below, Contractor is to be interpreted to mean either the Construction Manager (for projects using construction-manager-at-risk delivery) or the Design/Build Contractor (for projects using design-build delivery).

2.6.2 For projects using construction manager-at-risk (CMR) or design-build (DB) delivery Contractor (Construction Manager for CMR delivery or Design/Build Contractor for DB delivery) shall provide a written Procurement Package Strategy (PPS) for procuring subcontracts including self-performance Work (other than General Conditions), prior to the acceptance of the Guaranteed Maximum Price Proposal (GMP Proposal), but no later than twenty (20) days prior to the first solicitation of offers. The PPS shall be a written plan submitted to and reviewed by Owner and the A/E.

2.6.2.1 The plan shall identify procurement packages that are most advantageous to the Project and align with the Contractor's HUB Good Faith Effort by providing at least three (3) qualified respondents (including the Contractor for any Work Contractor is seeking to self-perform). Each procurement package shall include the UTUGCs, Owner's Special Conditions, Owner's Division 01 Specifications, Drawings and Specifications and any other Owner requirements included in the Contract Documents pertaining to the scope of work covered in the packages.

2.6.2.2 The PPS shall conspicuously identify any and all work for which the Contractor intends to submit a bid/offer, but will not perform with Contractor's own forces (i.e. subcontract to someone else if determined to be "best value").

2.6.2.3 The PPS shall include the following for each procurement package contemplated:

2.6.2.3.1 Anticipated scope of work to be procured.

2.6.2.3.2 Anticipated selection criteria and questions.

2.6.2.3.3 Self-perform work proposals to be submitted by Contractor.

2.6.2.3.4 Proposed advertising dates.

2.6.2.3.5 Proposed pre-submittal/HUB/ROCIP meetings.

2.6.2.3.6 Proposed Receipt, review and award dates.

2.6.2.3.7 Anticipated notice to proceed dates.

2.6.2.4 Contractor shall update the PPS monthly as a minimum or whenever conditions change or proposed dates are revised.

2.6.3 The goal of the Project Team shall be to have all work procured through an advertised competitive process, however, if a "minor procurement" condition arises during the process, the following procurement guidelines may be used by Contractor, with Owner approval, for procurement of work:

2.6.3.1	Less than $15,000.00:	No requirements
2.6.3.2	$15,000.01 and up to $50,000.00:	Obtain three (3) informal offers
2.6.3.3	$50,000.00 or more:	Advertised competitive offers

2.6.4 This requirement does not pertain to Change Orders to existing subcontracts.

2.6.5 Work may be divided into reasonable lots; however, material or labor acquired through purchase order/vendor type agreements are subject to the entire Project (e.g. concrete material shall be procured as a unit price times an estimated total project quantity provided by Contractor to equal a total construction cost). Work shall not be incrementally divided for the purpose of circumventing the procurement guidelines.

2.6.6 Contractor may establish selection criteria for each phase of work for review by the Project Team. Criteria shall be qualifications based and consistent with the information needed by Contractor to make a proper evaluation and selection. Contractor shall establish a selection matrix including cost, criteria, weighting and ranking procedures for evaluation. Contractor shall work with the Project Team to tailor the selection criteria to be Project and scope specific, and ensure that the questions are proper and relevant to the goals of the Project. Contractor shall follow the Good Faith Effort (HUB) requirements identified in Owner's Rider 104, *Policy on Utilization of Historically Underutilized Businesses*, which is included as an Exhibit to the Agreement, including attachments to be completed by first tier subcontractors. However, HUB participation/status cannot be used as criteria for determining "best value", only for determining if the respondent is responsive.

2.6.6.1 Contractor shall establish clear criteria and questions so that those reading the Invitation to Bid or the Request for Proposals will understand how they will be evaluated.

2.6.6.2 If criteria are not included in a Request for Proposals, the request shall be considered an Invitation to Bid, and Contractor shall award the subcontract to the responsible, responsive bidder that submits the lowest price offer.

2.6.6.3 After selection criteria have been established, Contractor shall publicly advertise the work in general circulations and trade. This advertisement shall include, at a minimum, the following:

2.6.6.3.1 Owner Project Number and Owner Project Name.

2.6.6.3.2 Contractor name and address.

2.6.6.3.3 Contractor contact name and phone number.

2.6.6.3.4 Location for viewing plans and specifications.

2.6.6.3.5 Date, time and location of Pre-submittal/HUB/ROCIP meeting.

2.6.6.3.6 Date, time deadline(s), and location for receiving proposals.

2.6.6.3.7 Instructions to respondents for submitting offers.

2.6.6.3.8 Selection criteria, questions and submittal requirements.

2.6.6.3.9 Reference to and a copy of Owner's Rider 104, Policy on Utilization of Historically Underutilized Businesses.

2.6.6.3.10 For projects enrolled in The University of Texas System Rolling Owner's Controlled Insurance Program (ROCIP or OCIP),

2.6.6.3.10.1 a copy of Owner's Specification Section 00 73 16, Project Insurance (OCIP),

2.6.6.3.10.2 a copy of Owner's Specification Section 01 35 23, Project Safety (OCIP), and

2.6.6.3.10.3 To ensure compliance with Texas statutory requirements, each offer or bid response form shall include the following language on the signature page; "By signing and submitting this offer, I acknowledge that this project will use an Owner Controlled Insurance Program (OCIP) and I will participate in the program."

2.6.7 At the time and location identified in the advertisement, Contractor shall hold a Pre-submittal/HUB/ROCIP meeting for all prospective respondents with the Project Team and Owner's HUB Coordinator. Contractor shall review as a minimum:

2.6.7.1 The general scope of the Project and the specific scope of work included in the package.

2.6.7.2 Instructions to respondents for submitting offers.

2.6.7.3 Selection criteria and questions.

2.6.7.4 HUB Good Faith Effort requirements.

2.6.7.5 Project Safety requirements.

2.6.7.6 OCIP requirements (if applicable).

2.6.7.7 Work Progress Schedule requirements.

2.6.7.8 Payment procedures and requirements, including retainage.

2.6.7.9 Commissioning and Close-out requirements.

2.6.8 If Contractor identifies any self-performance in the PPS (work to be performed by Contractor's own employees), Contractor shall submit a proposal to Owner at the advertised time and location in a manner so as not to compromise the competitive process.

2.6.8.1 Regardless of the work or method of accepting offers, all Contractor self-performance offers shall be:

2.6.8.1.1 Estimated and submitted by a separate estimating team that is not associated with Contractor's pre-construction and/or construction team;

2.6.8.1.2 Submitted in a sealed envelope;

2.6.8.1.3 The final offer price and not subject to change for any reason prior to recommendation of subcontract award.

2.6.9 Contractor shall accept all responses at the advertised location until the advertised deadline. Upon receipt, OPM will initial the response to indicate the time and date received. Any response received after the deadline shall not be considered by Contractor and shall be returned to the respondent unopened.

2.6.9.1 Fax responses will not be accepted unless Owner, prior to the initial advertisement for offers, approves a detailed plan by Contractor addressing issues related to receipt, care and custody that will ensure the integrity of the competitive procurement process.

2.6.10 After compiling, reviewing and verifying the prices and scope associated with all offers, Contractor shall provide an "offer tabulation" matrix and a proposed Schedule of Values for review by the Project Team.

2.6.10.1 The "offer tabulation" matrix shall compare all equivalent scope proposals to the Contractor's estimate.

2.6.10.2 Each matrix shall indicate Contractor's estimate for each scope of work and identify the respective cost savings/over-runs.

2.6.10.3 Contractor may use values/quantities from Contractor's own estimate to provide full scope comparisons between each respondent, however, these "plug" numbers shall be clearly identified in the matrix to the Project Team and be used only to compare the various offers.

2.6.10.4 The proposed updated Schedule of Values shall summarize all executed and recommended subcontracts to provide a current status of the Guaranteed Maximum Price Proposal.

2.6.10.5 Once the offers are compiled into an "offer tabulation" matrix and the proposed Schedule of Values has been updated, Contractor shall request a meeting with the Project Team to review the offers.

2.6.11 Contractor shall lead the offer review meeting by reviewing the scope of work, the offers received, any exclusions or conditions, identify any non-qualified respondents and any other problems that may have occurred during the process.

2.6.11.1 Contractor shall confirm that the respondents are qualified, meet the established selection criteria (if applicable), and identify the amount of each offer.

2.6.11.2 Contractor shall identify the recommended offer and the current status of the buy-out savings to the Project Team. If the recommend offer causes the Cost of Work line item (including any contingencies) to exceed the amount in the GMP, Contractor shall acknowledge that the overage will be deducted from Contractor's Construction Phase Fee.

2.6.12 Once a recommended respondent has been identified by Contractor, without exception by Owner, Contractor shall finalize negotiations with the recommended respondent.

2.6.12.1 Contractor shall identify and confirm with OPM the “plug” numbers, if any, Contractor intends to use in Contractor’s negotiations. “Plug” numbers may be established through Contractor’s own estimate (if submitted to OPM before the advertised deadline) or values included in other non-selected respondent offers.

2.6.12.2 If Contractor cannot reach an agreement with the selected respondent, Contractor shall notify OPM that Contractor intends to begin negotiations with the second recommended” respondent.

2.6.12.3 Contractor shall issue a letter to Owner indicating that Contractor intends to write a subcontract to the selected respondent (including self-perform work), identifying the following:

2.6.12.3.1 The procurement package number.

2.6.12.3.2 The base price from the selected respondent and any alternates included in the offer.

2.6.12.3.3 The total value of the proposed subcontract with a description of any changes from submittal day values.

2.6.12.3.4 Drawings and/or specifications related to the subcontract.

2.6.12.3.5 Additional scope items added to the subcontract (as previously agreed to by Owner) and their value.

2.6.12.3.6 Current status of the GMP identifying current savings/overages.

2.6.12.3.7 A copy of the offer tabulation matrix.

2.6.12.3.8 A copy of the executed subcontract or purchase order, etc. is required prior to any request for payment by Contractor for applicable work.

2.6.12.4 If Owner objects to the recommended respondent identified by Contractor, Owner may conduct an evaluation of the selection process and/or results.

2.6.12.4.1 If, after evaluation, Owner disagrees with Contractor’s recommendation, Owner may instruct Contractor to either re-solicit the scope of work or use Owner’s preferred selection.

2.6.12.4.2 If the value of Owner’s preferred selection causes Cost of Work line item to exceed the amount in the GMP, the amount of the excess will be the responsibility of Owner.

2.6.12.5 Contractor shall provide one (1) complete copy of all recommendation letters and offers to OPM for record, as they occur until Final Payment.

2.6.13 For additional procurement packages, Contractor shall repeat the steps identified outlined above as many times as identified in the current PPS for the entire Project.

2.7 DAILY REPORT

2.7.1 Contractor shall provide on a daily basis, the A/E and OPM with a report detailing Contractor’s daily activities on the Project using a format acceptable to Owner. All tests that Contractor performs and all work reports required of Subcontractors shall be attached to Contractor’s daily report.

2.7.2 The report shall include, as a minimum, the following information as it relates to the day's activities on the Site:

2.7.2.1 Total number of employees on the Site (including total number of employees for Contractor and each Subcontractor); any change in personnel;

2.7.2.2 Equipment;

2.7.2.3 Areas of work and type of work performed;

2.7.2.4 Material received;

2.7.2.5 Tests performed;

2.7.2.6 Any injuries and/or accidents;

2.7.2.7 Any oral instructions received;

2.7.2.8 Any material damage; and anything else that might impact quality or schedule.

PART 3 – EXECUTION

3.1 PRE-CONSTRUCTION CONFERENCE (WITH OR WITHOUT A PARTNERING WORKSHOP)

3.1.1 Owner may provide a Pre-Construction Brochure, as an overview of administrative procedures for the Project. A review of the brochure, identification of key Project personnel, Owner's sample administrative forms, and other information will be conducted at the Pre-Construction Conference.

3.1.2 Upon mutual agreement, a Partnering Workshop may be held with or near the time of the Pre-Construction Conference. Contractor shall pay for the Pre-Construction Conference and/or Partnering Workshop in total and Owner will reimburse Contractor for fifty percent (50%) of the mutually agreed-upon costs. For projects using construction manager-at-risk or design-build delivery, 100% of the costs will be reimbursed to Contractor as part of the General Conditions Costs.

3.1.2.1 The Pre-Construction Conference and/or Partnering Workshop is intended to provide further understanding among the parties, to establish mutual goals for the Project, and to develop strategies for achieving those goals.

3.1.3 Owner will schedule a Pre-Construction Conference to generally coincide with issuance of Notice to Proceed with Construction. The Pre-Construction Conference agenda will cover broad Project issues followed by detail review of administrative procedures.

3.1.3.1 The UTUGCs requires Contractor to comply with Owner's administrative requirements as outlined herein and as reviewed at the Pre-Construction Conference.

3.1.3.1.1 For Projects using construction manager-at-risk or design-build delivery, Owner may require a Pre-Construction meeting prior to Notice to Proceed with Construction.

3.1.3.1.2 For Projects using construction manager-at-risk or design-build delivery and multiple procurement packages, Owner may schedule additional Pre-Construction Conferences to include any Subcontractors added to the Project after the initial Pre-Construction Conference.

3.1.4 Attendance is required at the conference by all appropriate representatives of Contractor, mechanical, electrical, plumbing Subcontractors, and any additional subcontractors (proposed or engaged), whose scope of work represents five percent (5%) or more of the total construction cost. Contractor shall request all HUB subcontractors also be represented. Each firm is to be represented by personnel directly involved in the Project, including project managers and project superintendents or labor foremen, as a minimum.

3.1.4.1 Project representatives of Contractor and all other parties directly involved with the processing or executing of Project submittals, changes and/or payments should attend the Pre-Construction Conference.

3.1.5 Prior to the scheduled time of the Pre-Construction Conference, Contractor shall provide Owner a written outline of all involved firms, Contractor's key personnel, including mailing address and phone numbers to be incorporated into a Project Directory.

3.2 OWNER'S MONTHLY PROJECT PROGRESS MEETINGS

3.2.1 In addition to specific coordination meetings, pre-installation contractor meetings for each element of Work, and other Project meetings for other purposes, Owner may schedule and conduct a Project Progress Meeting at least once each month with the timing generally coinciding with preparation of payment request and submission of the updated Work Progress Schedule.

3.2.2 Contractor shall coordinate with Contractor's Subcontractors so that each entity then involved in planning, coordination, or performance of Work will be properly represented at each meeting.

3.2.2.1 Prior to the monthly Project Progress Meeting, Contractor shall convene a similar progress meeting with Contractor's Subcontractors to review each of the Subcontractor's present and future needs including interface requirements, utility outages required, sequences, deliveries, access, Site utilization, temporary facilities and services, hours of work, hazards and risks, housekeeping, change orders, and documentation of information for payment requests in order to be fully prepared to discuss all pertinent issues with Owner. Contractor shall notify Owner and A/E in advance of such meetings with subcontractors.

3.2.3 Owner's monthly Project Progress Meetings may include review of Contractor's updated Work Progress Schedule and forecast of operations for the coming period, coordination issues, anticipated utility outages, status of requested change proposals and other cost impact issues, status of the commissioning process, updates to the HUB Progress Assessment Report, and other Project issues.

3.2.4 Contractor and A/E shall provide separate tracking logs for submittals, RFIs, ASIs, and changes in a package for each primary meeting participant. For Projects using design-build delivery, a single set of tracking logs may be utilized if accepted in advance by Owner.

3.2.5 OPM will chair the Project Progress Meetings. Contractor shall be specifically prepared to discuss the following at each Project Progress Meeting:

3.2.5.1 Work Progress Schedule Update Reports as required in Section 01 32 00 – Project Planning and Scheduling.

3.2.5.2 Status of "action" items from the previous Project Progress Meeting.

3.2.5.3 Update on subcontract buyout activities (for projects using construction manager-at-risk or design-build delivery).

3.2.5.4 Current status of product submittals and shop drawings, requests for information (RFI), and A/E's clarifications (ASI).

3.2.5.5 Status of Project changes and other items of significance, which could affect progress.

3.2.5.6 Status of the commissioning process for the Project.

3.2.6 In addition to the monthly Project Progress Meeting, Owner may also schedule bi-monthly, weekly, or other Project meetings at various stages of the Project as conditions may dictate. However, the complete report requirements noted above will apply only to the monthly Project Progress Meetings.

3.3 UTILITY OUTAGES

3.3.1 Contractor shall notify Owner's OPM, in writing, of any planned utility outages in accordance with Owner's Special Conditions.

3.3.2 Owner will provide a standard form for processing a request for utility shutdown or any other campus disruption. Contractor shall utilize this form, Utilities Outage Shutdown Request Form, with attachments as necessary, in requesting an outage. Refer also to Section 00 25 00 - Owner's Special Conditions for Owner's Policy for Planned Utility Outages.

3.3.3 Contractor shall not turn services on or off, without prior written authorization from Owner. Unless Contractor is directed otherwise, Owner will turn services on and off.

3.4 TESTING

3.4.1 Refer to the UTUGCs and Section 01 45 00 – Project Quality Control for additional requirements.

3.4.2 Where specific testing is specified in a technical section of the Specifications or otherwise indicated in the Contract Documents, Contractor shall bear the costs of all tests unless the Contract specifically states that it is to be paid for by Owner.

3.5 INSPECTIONS

3.5.1 Refer to the UTUGCs and Section 01 45 00 – Project Quality Control for inspection requirements not identified in this Section.

3.5.2 Contractor shall provide sufficient, safe and proper facilities at all reasonable times for observation and/or inspection of the Work by Owner and Owner's consultants. This shall include any and all equipment necessary for access to various aspects of the Work.

3.6 ONE-YEAR WARRANTY

3.6.1 Refer to the UTUGCs for warranty requirements not identified herein.

3.6.2 If informed of a defect, Contractor shall remedy the defect at Contractor's own cost and respond in writing to OPM and the notifying party within ten (10) days indicating the action taken to resolve the defect.

3.6.3 Contractor shall attend any and all meetings to resolve warranty issues. Contractor will provide a tracking log of all warranty issues and Contractor's resolution.

3.6.4 Contractor shall participate in an end-of-warranty Project review with Owner, as scheduled by OPM, at a time prior to termination of the warranty period.

3.6.5 Unless directed otherwise in writing by Owner, all warranties shall use the date of Substantial Completion as the start date for that particular warranty.

3.6.5.1 If any equipment and/or system is placed into continuous service prior to the date of Substantial Completion, Contractor shall provide, at Contractor's own cost, for the necessary warranty extension.

3.6.5.2 Contractor shall deliver all equipment to Owner in an "as-new" condition. If equipment is put into service for the convenience of Contractor, Contractor shall, at Contractor's own expense, maintain, service and refurbish the equipment to "as-new" condition prior to delivery to Owner.

3.6.6 Provisions described herein shall also apply to those items having warranties greater than one-year.

END OF SECTION 01 31 00

Attachment No. 1 – Application for Payment Example

Attachment No. 2 – Schedule of Values Example

☐Yes ☐No

THE UNIVERSITY OF TEXAS
M.D. ANDERSON CANCER CENTER

APPLICATION FOR PAYMENT - CONSTRUCTION MANAGER AT RISK

APPLICATION FOR PARTIAL PAYMENT No. {ENTER No.} PROJECT No. {ENTER No.}

FOR THE PERIOD: {ENTER BEGINNING DATE} TO: {ENTER ENDING DATE} INCLUSIVE.

NAME OF PROJECT: {ENTER PROJECT NAME}

CM-R NAME & ADDRESS: {ENTER CM-R NAME & ADDRESS}

TO BE COMPLETED BY THE CONSTRUCTION MANAGER AT RISK

		PRE-CONSTRUCTION SERVICES	+	CONSTRUCTION SERVICES (GMP)	=	TOTAL CONTRACT AMOUNT
1	Original Contract Amount:	$ 0		$ 0		$ 0
2	Approved Change Order Extras:	$ 0		$ 0		$ 0
3	Accepted Change Order Deductions:	$ 0		$ 0		$ 0
4	Current Contract Amount:	$ 0		$ 0		$ 0
5	Total Completed To Date:	$ 0		$ 0		$ 0
6	Less Total Retainage Held To Date:	N/A		$ 0		$ 0
7	Total Net Earned Amount:	$ 0		$ 0		$ 0
8	Less Previous Payments:	$ 0		$ 0		$ 0
9	*Current Payment Due For Each Part:*	$ *0*		$ *0*		$ *0*
10	Balance To Finish, Including Retainage: *(line 4 less line 7)*	$ 0		$ 0		$ 0

AFFIDAVIT

Insurance: I, agent for the Construction Manager-at-Risk, do hereby certify that all insurances as required by law, and by the specifications, are in full force and effect as of this date.

Claims & Liability: I, agent for the Construction Manager-at-Risk, do furthermore certify that all current invoices and obligations have been paid in full, and there are no claims or liabilities against this contract.

_____
Signature of CM-R

Example

CONSTRUCTION MANAGER AT RISK'S NOTARIZED SIGNATURE

STATE OF TEXAS
COUNTY OF
_____
(STAMP SEAL BELOW)

Personally before me, the undersigned authority, this day appeared ....., {PRINTED NAME OF CM-R AGENT} who being by me duly sworn, on his oath says that the account hereto attached, in the amount of ....., {ENTER AMOUNT} ..... in favor of {PRINTED NAME OF CONTRACTOR/FIRM} against The Board of Regents of the University of Texas System and M.D. Anderson Cancer Center, is, within the knowledge of affiant, just true, and correct that it is due and that all just and lawful offsets, payments, and credits have been allowed.

Sworn to and subscribed before me, ... {CONTRACTOR SIGNATURE} ..... this _____ day of _____, 20 _____.
Signature of CONTRACTOR

Notary Public {NOTARY SIGNATURE} {ENTER NAME OF COUNTY} County, Texas
Signature of Notary

CONSTRUCTION SERVICES CERTIFICATE: TO BE COMPLETED BY THE PROJECT ARCHITECT/ENGINEER

TO THE BOARD OF REGENTS OF THE UNIVERSITY OF TEXAS SYSTEM, AUSTIN, TEXAS and the M.D. Anderson Cancer Center, Houston Texas

This is to certify that _____ ....., Construction Manager-at-Risk

for the Project ..... _____ ..... is entitled to payment

for Construction Services of this Certificate in the amount of ..... $ _____

Architect/Engineer ..... _____

Reviewed and Approved on ..... _____ By: _____
Date *Signature of A/E*

PRE-CONSTRUCTION SERVICES : TO BE COMPLETED BY THE UTMDACC PROJECT MANAGER

Current Payment For Pre-Construction Services ..... $ _____

Reviewed and Approved on ..... _____ By: _____
Date *Signature of PM*

CONSTRUCTION SERVICES : TO BE COMPLETED BY THE UTMDACC PROJECT MANAGER

CM-at-Risk has submitted an updated Project Schedule:

CM-at-Risk has updated the Record Drawings:

This Pay Application includes a current Release of Retainage:

if "Yes", CM-at-Risk has included a "Consent of Surety":

Current Payment For Construction Services ..... $ _____

Reviewed and Approved on ..... _____ By: _____
Date *Signature of PM*

Attachment No. 2 – Schedule of Values Example

(Obtain an Electronic Version of This Form From Owner's Project Manager)

The U.T.M.D.A.C.C. Schedule of Values - Contractor's Estimate Continuation Sheet (8 1/2" x 11" Sheet ONLY)

Project No.:	Project Address:
Project Name:	Application For Payment Number:
Costruction Manager Name:	Application Period: From To

A	B	C		D	E	F	G	H	I	J	K	L	M	N
Spec. Section / Bid Package	Description of Work / Subcontractor / Supplier / Vendor / Specification Section	Initial Proposed Line Item Values	Additional Services / GMP Change Order Values	Actual Subcontract Amount at Buyout	Delta (Proposed to Actual)	Subcontract, Purchase Order or Vendor No.	Detailed Breakdown of Contract Line Items	Total Amount Previously Requested & Percent		Current Application: Total Amount This Period & Percent		Current Application: Total Amount Completed To Date & Percent		Retainage (5%)
Column Equations				C'	C - D		D'	L'	H / G	L - H	J / G	H + J	L / G	L x 5%
Pre-Construction Services														
Programming (20% If Applicable)		$ -	$ -	$ -	$ -	N/A	$ -	$ -	0%	$ -	0%	$ -	0%	N/A
Schematic Design (20%)		$ -	$ -	$ -	$ -		$ -	$ -	0%	$ -	0%	$ -	0%	
Design Development (20%)		$ -	$ -	$ -	$ -		$ -	$ -	0%	$ -	0%	$ -	0%	
GMP Development (10%)		$ -	$ -	$ -	$ -		$ -	$ -	0%	$ -	0%	$ -	0%	
Construction Documents (20%)		$ -	$ -	$ -	$ -		$ -	$ -	0%	$ -	0%	$ -	0%	
Bidding/Proposals (10%)		$ -	$ -	$ -	$ -		$ -	$ -	0%	$ -	0%	$ -	0%	
Additional Services		$ -	$ -	$ -	$ -		$ -	$ -	0%	$ -	0%	$ -	0%	
Pre-Construction Services Subtotal		$ -	$ -	$ -	$ -		$ -	$ -	0%	$ -	0%	$ -	0%	
Construction Services														
General Conditions														
On-Site Project Management Staff														
Project Scheduler		$ -	$ -	$ -	$ -	N/A	$ -	$ -	0%	$ -	0%	$ -	0%	$ -
Project Executive		$ -	$ -	$ -	$ -	N/A	$ -	$ -	0%	$ -	0%	$ -	0%	$ -
Superintendent(s)		$ -	$ -	$ -	$ -	N/A	$ -	$ -	0%	$ -	0%	$ -	0%	$ -
Office Engineer(s)		$ -	$ -	$ -	$ -	N/A	$ -	$ -	0%	$ -	0%	$ -	0%	$ -
Project Manager(s)		$ -	$ -	$ -	$ -	N/A	$ -	$ -	0%	$ -	0%	$ -	0%	$ -
Project Expeditor(s)		$ -	$ -	$ -	$ -	N/A	$ -	$ -	0%	$ -	0%	$ -	0%	$ -
Project Support Staff		$ -	$ -	$ -	$ -	N/A	$ -	$ -	0%	$ -	0%	$ -	0%	$ -
Assistant Superintendent(s)		$ -	$ -	$ -	$ -	N/A	$ -	$ -	0%	$ -	0%	$ -	0%	$ -
Safety Coordinator/Assistant(s)		$ -	$ -	$ -	$ -	N/A	$ -	$ -	0%	$ -	0%	$ -	0%	$ -
Out-of-State Project Specific Travel*		$ -	$ -	$ -	$ -	N/A	$ -	$ -	0%	$ -	0%	$ -	0%	$ -
Bonds and Insurance														
Builder's Risk Insurance		$ -	$ -	$ -	$ -	N/A	$ -	$ -	0%	$ -	0%	$ -	0%	$ -
General Liability Insurance		$ -	$ -	$ -	$ -	N/A	$ -	$ -	0%	$ -	0%	$ -	0%	$ -
Payment and Performance Bonds		$ -	$ -	$ -	$ -	N/A	$ -	$ -	0%	$ -	0%	$ -	0%	$ -
Other Project Insurance as Required by Contract		$ -	$ -	$ -	$ -	N/A	$ -	$ -	0%	$ -	0%	$ -	0%	$ -
Temporary Project Utilities														
Dumpsters		$ -	$ -	$ -	$ -	N/A	$ -	$ -	0%	$ -	0%	$ -	0%	$ -
Project Water		$ -	$ -	$ -	$ -	N/A	$ -	$ -	0%	$ -	0%	$ -	0%	$ -
Project Electricity		$ -	$ -	$ -	$ -	N/A	$ -	$ -	0%	$ -	0%	$ -	0%	$ -
Temporary Toilets		$ -	$ -	$ -	$ -	N/A	$ -	$ -	0%	$ -	0%	$ -	0%	$ -
Monthly Telephone / Internet Service		$ -	$ -	$ -	$ -	N/A	$ -	$ -	0%	$ -	0%	$ -	0%	$ -
Temporary Fire Protection		$ -	$ -	$ -	$ -	N/A	$ -	$ -	0%	$ -	0%	$ -	0%	$ -
Street Rental and Barricades		$ -	$ -	$ -	$ -	N/A	$ -	$ -	0%	$ -	0%	$ -	0%	$ -
Telephone / Internet System Installation		$ -	$ -	$ -	$ -	N/A	$ -	$ -	0%	$ -	0%	$ -	0%	$ -
Fencing and Covered Walkways		$ -	$ -	$ -	$ -	N/A	$ -	$ -	0%	$ -	0%	$ -	0%	$ -
Temporary Water Distribution and Meters		$ -	$ -	$ -	$ -	N/A	$ -	$ -	0%	$ -	0%	$ -	0%	$ -
Temporary Electrical Distribution and Meters		$ -	$ -	$ -	$ -	N/A	$ -	$ -	0%	$ -	0%	$ -	0%	$ -
Site Erosion Control (BMP) and Project Entrance(s)		$ -	$ -	$ -	$ -	N/A	$ -	$ -	0%	$ -	0%	$ -	0%	$ -
Field Offices & Office Supplies														
Partnering Costs		$ -	$ -	$ -	$ -	N/A	$ -	$ -	0%	$ -	0%	$ -	0%	$ -
First Aid Supplies		$ -	$ -	$ -	$ -	N/A	$ -	$ -	0%	$ -	0%	$ -	0%	$ -
Job Photos/Videos		$ -	$ -	$ -	$ -	N/A	$ -	$ -	0%	$ -	0%	$ -	0%	$ -
Reproduction Services		$ -	$ -	$ -	$ -	N/A	$ -	$ -	0%	$ -	0%	$ -	0%	$ -

Example

FOR MD ANDERSON USE ONLY. DELETE THIS PAGE BEFORE ISSUING DOCUMENTS.

DOCUMENT REVISION HISTORY					
Issue	**Date**	**Revision Description**	**Author or SME**	**Approved By**	**Edited By**
Rev. 1	**20190301**	**Original Issuance**			**FPDC**
Rev. 2	**20200130**	**Revisions by Jim Waters**	**Jim Waters**	**Jim Waters**	**Richard Fitzgerald**
Rev. 3	**20200206**	**Format revisions to place attachments before the revision block**	**Jim Waters**	**Jim Waters**	**Richard Fitzgerald**
Rev. 4					
Rev. 5					
Rev. 6					

SECTION 01 32 00 - PROJECT PLANNING AND SCHEDULING

PART 1 - GENERAL

1.1. RELATED DOCUMENTS

1.1.1. The Contractor's attention is specifically directed, but not limited, to the Uniform General Conditions for University of Texas System Building Construction Contracts (UGC) for other requirements.

1.2. SUMMARY

1.2.1 **Time is an essential part of this Contract. Therefore the timely and successful completion of the Work requires careful planning and scheduling of all activities inherent in the completion of the Project.**

1.2.2 Contractor must develop the Project Schedule to allow for a minimum amount of Float for the Project during Pre-Construction and/or Construction Services. Contractor must format the Project Schedule in a manner that facilitates reporting of progress and trends, identification of all critical paths, identification of each activity's predecessor(s) and successor(s), risks and opportunities, projection of upcoming activities, and forecasting of Project milestones.

1.2.3 The Owner must be able to reasonably rely on the Contractor's Project Schedule for projected activity dates in order to make accurate commitments to design professionals, contractors, vendors, user group(s), campus administration, and other parties as necessary.

1.2.4 **Owner's acceptance of the Project Schedule and any subsequent update of the Project Schedule are acceptance of the format and extent of detail of the Project Schedule only. Owner's acceptance does not indicate approval of the Contractor's means or methods, or of any change to the contract terms including, without limitation, any required contract Milestone Activities.**

1.2.5 This Specification applies to all Project delivery methods, regardless of contract type, whether the contracting firm, referred to as the Contractor, is a General Contractor, Construction Manager-at-Risk (CM-R), or Design/Build (DB) Contractor.

1.2.5.1 All references to Pre-Construction Services in this Specification shall apply to requirements for CM-R and DB contract types <u>only</u>.

1.3. DEFINITIONS

1.3.1. The term "Project Schedule", as used throughout the Contract Documents, shall refer to the schedule for the Project as developed, monitored, and maintained, by the Contractor's Project Scheduler, and as used by the Project Team during Pre-Construction and/or Construction Services.

1.3.2. The term "Project Team", as used throughout the Contract Documents, shall refer to the Owner, Architect, Design Consultants, Engineer, User, Contractor, Owner's Service Providers, and Subcontractors (as applicable) that are contracted and/or specifically assigned to the Project.

1.3.3. The term "Owner's Planning and Scheduling Specialist", as used throughout the Contract Documents, shall refer to the Owner's scheduling specialist representative, with all correspondence to be addressed to:

MD Anderson Cancer Center
Facilities Planning, Design and Construction, Mail Box 703
1515 Holcombe Boulevard, Suite 1010

Houston, Texas 77030

1.3.4. The term “Data Date”, as used throughout the Contract Documents, shall refer to the date of the Project Schedule update.

1.3.5. The term “Total Float” (Float), as used throughout the Contract Documents, shall refer to the number of calendar days an activity on the Longest Path can be delayed without delaying the Substantial Completion date.

1.3.5.1. Negative Float indicates that the Project is late, while Positive Float is the property of the Project and does not belong to any one party (Refer to the UGC).

1.3.6. The term “Longest Path”, as used throughout the Contract Documents, shall refer to the sequence of activities that determines the longest duration for the Project when the Float is greater than zero.

1.3.6.1. The term “Critical Path”, as used throughout the Contract Documents, shall refer to the sequence of activities that determines the longest duration for the Project when the Float is equal to or less than zero.

1.4. CONTRACTOR RESPONSIBILITY

1.4.1. The Contractor is responsible for planning, management, coordination, and scheduling of all activities from a Notice to Proceed for Pre-Construction and Construction to Final Completion of the Project within the time allotted by the Agreement.

1.4.2. The Contractor is responsible for keeping the Owner and the Project Team fully informed of schedule status and upcoming activities throughout the Project via the Project Schedule.

1.4.3. The Contractor is solely responsible for the schedule and status of all activities related to Pre-Construction, procurement of materials and subcontractors, construction, testing, inspection, commissioning, and Project turnover to the Owner. The Contractor shall integrate the schedule and status of Owner furnished services such as test, adjust, and balance. Contractor shall schedule completion of activities and proactively submit for Owner’s review and approval, all documentation related to commissioning, including, but not limited to, the following. (Refer to Section 01 91 00 – Project Commissioning and Section 01 77 00 – Project Closeout Procedures for additional requirements.)

1.4.3.1. Commissioning Plan.

1.4.3.2. Equipment Matrix.

1.4.3.3. Submittal Schedule.

1.4.3.4 Format, content, and tab structure for Operating and Maintenance Manuals and submittal of binders.

1.4.3.5. Request for Start-Up/Functional Performance Test Form.

1.4.3.6. Prefunctional Checklists.

1.4.3.7. Functional Performance Test Procedures.

1.4.3.8. Integrated System Test Procedures.

1.4.3.9 Additional Commissioning and Closeout Manual documentation.

1.4.4. The Contractor shall provide adequate and reasonable Project planning in sufficient detail throughout all Project phases, as applicable for all aspects of Contractor's Work, to ensure completion of all activities within the Contract Time.

1.4.5. The Contractor's Pre-Construction and Construction project management personnel shall actively participate in the planning and development of the Project Schedule and shall be prepared to review such development and progress with the Owner, Architect/Engineer, and any other members of the Project Team so that the planned sequences and procedures are clearly understood by all parties.

1.4.6. The Contractor shall plan for appropriate activity durations to allow for thorough review, procurement, submittal, installation, inspection, testing, and commissioning, of all Work and/or systems in order to confirm Contract compliance, including Work relying on Owner participation or coordination.

PART 2 – PRODUCTS

2.1 QUALIFICATIONS OF THE PROJECT SCHEDULER

2.1.1 The Contractor shall assign a Project Scheduler who shall be responsible for the Project Schedule throughout Pre-Construction and Construction Services.

2.1.2 The Contractor's Project Scheduler shall have at least an undergraduate degree in a construction related field, and continuous experience on similar size and type of project(s) within the past five (5) years, including at least two (2) years with the specified scheduling software.

2.1.2.1 In lieu of a degree, the Contractor's Project Scheduler may have at least five (5) years continuous experience on similar size and type of project(s) with the specified scheduling software.

2.1.3 The Contractor's Project Scheduler shall be an integral part of the Project Team during Pre-Construction Services and shall be on-site full-time for Construction Services until at least Substantial Completion of the Work.

2.1.3.1 The Contractor's Project Scheduler may have additional responsibilities such as Senior Project Manager, Project Manager, Superintendent, Assistant Project Manager, Assistant Superintendent, Project Engineer, etc.

2.1.3.2 If the Contractor's Project Scheduler is outsourced, the Contractor shall assign an on-site contact for all Project Schedule related issues.

2.1.4 All Contractor personnel involved in the preparation, updating, and reporting of the Project Schedule shall possess adequate construction scheduling knowledge related to the Project, Critical Path Method (CPM) knowledge, and a general understanding of the specified software.

2.2 REQUIRED SCHEDULING SOFTWARE

2.2.1 Regardless of Project size or type, Contractor shall develop and maintain the Project Schedule using the latest version of Microsoft Project available as of the effective date of the Contract.

2.3 NAMING THE PROJECT SCHEDULE

2.3.1 The Contractor shall title the initial Owner approved Project Schedule, the Baseline Project Schedule: BPS1. Contractor may not "reset" the Baseline Project Schedule unless the Owner approves the reset.

2.3.1.1 If the Owner approves the Contractor's request to "reset" the Baseline Project Schedule, the new Baseline Project Schedule shall be titled sequentially (i.e. BPS1, BPS2, BPS3, etc.).

2.3.2 Subsequent updates to the Baseline Project Schedule shall be named by the last two (2) digits of the year and the month (Example: a March 2004 Baseline Project Schedule title would be "BPS2-0403").

2.4 PROJECT SCHEDULE DEVELOPMENT REQUIREMENTS

2.4.1 The Contractor shall assign a standard "Activity Code" using a custom field, to every activity or task; organized by at least the Project phase, stage, location, building, floor, area, elevation, or system, etc., (i.e. work breakdown structure) including the following primary Activity Codes:

Activity Code & Description	
CP	Contract Procurement
PP	Programming/Pre-Project Planning
SD	Schematic Design
DD	Design Development
CD	Construction Documents
BOR	U.T. System Board of Regents
GMP	Guaranteed Maximum Price
TH	THECB Approval
SP	Subcontractor Bidding / Procurement

Activity Code & Description	
C	Construction
GC	General Conditions
SU	Submittals
FD	Fabricate and Delivery
CI	Contractor Inspections
OI	Owner Inspections
Cx	Commissioning
TAB	Test, Adjust, and Balance
OP	Owner Provided - Contractor Installed

2.4.2 The Contractor shall assign a standard "Resource Code" to every Contractor, Subcontractor, Supplier, Fabricator, Installer, Design Consultant, Owner, and any other party responsible for the accomplishment of an activity, including, but not limited to, the following primary Resource Codes (as applicable):

Resource Code & Description	
A/E	Architect / Engineer
Carp	Carpet
Casf	Casework Fabricator
Casi	Casework Installer
Cocw	Concrete Formwork
Conf	Concrete Finishing
Ctil	Ceiling / Acoustical Tile
Door	Doors & Frames
Dryw	Drywall / Light Gauge Stud Installer
Elec	Electrical
Elev	Elevator
Falm	Fire Alarm Systems
Fire	Fire Protection Systems
Ftil	Floor Tile
Furn	Furnishings
Glas	Glass / Glazing

Resource Code & Description	
Omat	Owner's Material Testing Firm
Otab	Owner's Air Testing & Balance Firm
Ownr	Owner
Pain	Paint & Wall Coverings
Pier	Piers / Piles / Caissons
Plas	Plaster / EIFS
Plum	Plum
Rebf	Reinforcing Steel Fabricator
Rebi	Reinforcing Steel Installer
Roof	Roofing
Sign	Signs
Site	Sitework
Stee	Steel Erector
Stef	Steel Fabricator
Mstf	Miscellaneous Steel Fabricator
Msti	Miscellaneous Steel Installer

Resource Code & Description	
Hard	Hardware
Hvac	HVAC
Insu	Insulator
Irri	Irrigation & Landscaping
Labc	Laboratory Casework Fabricator
Labi	Laboratory Casework Installer
Lbeq	Laboratory Equipment
Masn	Masonry

Resource Code & Description	
Stut	Site Utilities
Tele	Telephone / Communication Systems
Terz	Terrazzo
Toia	Toilet Accessories
Toip	Toilet Partitions
Watp	Waterproofing / Damp proofing
Wodf	Wood Framer
Wods	Wood Framing Supplier

2.4.2.1 The Contractor shall use additional Owner approved Resource Codes, as applicable.

2.4.3 The Contractor shall use additional Secondary Task and Resource Codes, as necessary, to monitor, provide status, and report the Project Schedule.

2.4.4 The Contractor shall assign a unique ”Work Breakdown Structure” (WBS Code) and ”Task Name” to <u>every</u> activity. The WBS Code and Task Name must be meaningful, easily understandable by the Project Team, similar to like activities at differing locations, and as shown on the Contractor’s Schedule of Values.

2.4.4.1 A Task Name shall start with a verb to indicate what is to be done and shall end with a location (Example: Install metal studs - 3rd floor Bldg B).

2.4.4.2 A “Milestone” Task shall refer to any major event or phase, or any other important point in the Project, including the following Tasks:

Milestone Task & Description	Milestone Task & Description
• NTP for Pre-Construction Services	• Authorize Architect/Engineer Start
• Authorize Architect/Engineer Start	• Submit for Owner Review(s)
• Submit for Owner Review	• Joint Review(s) for Owner Comments
• Joint Review for Owner Comments	• Approve Construction Documents
• Approve Schematic Design	• NTP for Construction Services
• Authorize Architect/Engineer Start	• Partnering/Preconstruction Meeting
• Submit for Owner Review	• Establish Site Controls /Mobilize
• Joint Review for Owner Comments	• Complete Primary Foundations
• Approve Design Development	• Structural Top-Out
• FPCC Meeting Deadline	• Building Dry-In
• BOR Approval	• Systems Commissioning
• Submit Construction Application	• Substantial Completion
• Approve Construction Application	• Final Completion
• Submit GMP	• Operational Occupancy
• Approve GMP	

2.4.4.3 A “Detailed” Task shall refer to a single Work event in the Project. The following table contains examples of Detailed Tasks for scheduling:

Detailed Task - Example

- Site Mobilization

Material Approval/Procurement

- Door Frames Shop Drawings
- Contractor/A/E review
- Fabrication
- Door Frame Delivery
- Light Fixtures Submittal
- Contractor/Architect/Engineer Review
- Fabrication
- Light Fixture Delivery
- Sprinkler Shop Drawings/Calculations
- Contractor/Architect/Engineer Review
- Fabrication
- Initial Equipment Delivery
- Millwork Shop Drawings/Laminate Samples
- Contractor/Architect/Engineer Review
- Fabrication
- Initial Millwork Delivery

Construction

- Layout/Top Track
- MEP/Sprinkler Overhead Rough-In
- Door Frames/Wall Framing
- MEP In-Wall Rough-In
- In-Wall Inspection
- Corrections
- Cover Walls
- Tape and Float
- Frame Ceilings
- Furr-Downs/Recessed Light Coves
- Furr Down/Ceiling Drywall Cover
- Ceramic Tile
- Plumbing Fixtures - Toilet Rooms
- Prime/One-Coat Paint

Detailed Task - Example

- Toilet Partitions
- Ceiling Grid
- Curtaintrack Blocking
- Light Fixtures/Grilles/Sprinkler Drops/Smoke Detectors
- Overhead Inspections
- Overhead Corrections
- Ceiling Cover
- Light Coves
- Sheet Vinyl Flooring
- Millwork
- Cast Plastic
- Toilet Accessories
- Dark Room Equipment
- Plumbing Fixtures - Millwork
- Doors
- Hardware
- Glass & Glazing/Blinds
- Curtaintrack
- Biosafety Cabinets/Fume Hoods
- Darkroom Equipment
- Lockers
- Final Paint Coat/Wallcovering
- MEP Trim
- Film Illuminators
- TV Support Brackets
- Appliances
- Carpet Flooring
- Resilient Base
- Wall Protection
- Final Clean
- Pre-Final Inspections
- TAB
- Start-up and Testing
- Corrections

2.4.4.4 A “Summary” Task (i.e. Hammock) shall refer to a grouping (or a summary) of Milestone and/or Detailed Tasks in the Project Schedule.

2.5 PROJECT SCHEDULING METHOD REQUIREMENTS

2.5.1 “Retained Logic” is the required mode of Project Schedule processing.

2.5.2 The estimated Activity Duration of an activity shall be expressed in calendar days.

2.5.2.1 During Pre-Construction Services and Construction Services, the Project Team shall determine the maximum duration for any activity.

2.5.2.2 During Construction, the minimum duration for any Owner milestone inspection activity (i.e. concealed space, above ceiling, substantial and final completion) shall be at least three (3) work days per inspection and re-inspection, or as approved by the Project Team.

2.5.2.3 Estimated remaining Activity Durations shall be stated in work days, as of the Data Date of every Project Schedule update.

2.5.3 Except for the Notice to Proceed for Construction (Preconstruction for CM-R and DB contracts) and the Final Completion Date Milestone, activities shall not have “open ends”.

2.6 PROJECT SCHEDULE ANALYSIS REQUIREMENTS

2.6.1 The Contractor shall use the CPM technique to determine the overall Project duration through the analysis of the durations of each of the activities, their schedule dependencies, and their resultant Float.

2.6.2 For CM-R and DB contracts, the Project Schedule shall include at least **20%** Float from the Notice To Proceed for Pre-Construction Services to the Substantial Completion date.

2.6.3 The Project Schedule shall include at least **10%** Float from the Notice To Proceed for Construction Services to the Substantial Completion date as identified by the Owner in the Notice To Proceed.

2.6.4 Float shall be shown as an activity within the Project Schedule. It should be the last activity prior to the Substantial Completion date Milestone.

2.7 COORDINATION WITH OTHER DOCUMENTS AND WORK

2.7.1 The Contractor shall coordinate the Project Schedule with the Contractor’s Submittal Schedule and Schedule of Values, as required by the UGC and Section 01 31 00 - Project Administration (i.e. the Work breakdown structure shall be arranged, numbered, and described consistently across the various documents).

2.7.1.1 Cost and/or resource loading of the Project Schedule are allowed.

2.7.1.1.1 If the Contractor elects to cost-load the Project Schedule, the Contractor shall provide a separate Schedule of Values in the format required by the Owner in Section 01 31 00 - Project Administration.

PART 3 – EXECUTION

3.1 PLANNING AND SCHEDULING WORKSHOP

3.1.1 Within thirty (30) calendar days after a Notice To Proceed, the Contractor shall schedule and conduct a Planning and Scheduling Workshop with at least the Contractor’s Project Scheduler, Project Manager, Superintendent, the Owner’s Project Manager and Owner’s Planning and Scheduling Specialist (if applicable), the Architect/Engineer, Owner’s representatives, and any available Subcontractors prior to submitting the Project Schedule to the Owner.

3.1.1.1 The Contractor shall schedule and coordinate the workshop with the Owner at least ten (10) calendar days prior to the Planning and Scheduling Workshop. The Contractor shall submit a complete draft Project Schedule to the Owner at least five (5) calendar days prior to the Planning and Scheduling Workshop.

3.1.1.2 The Contractor shall review the draft Project Schedule with the Project Team, including a verbal description of the logic and sequencing of activities, method for determining estimated Activity Durations and corresponding resources required, and any activities involving Owner participation and/or approval.

3.1.2 For CM-R and DB projects, Contractor shall schedule and conduct at least two (2) Planning and Scheduling Workshops. The first shall be within thirty (30) calendar days after a Notice to Proceed with Pre-Construction Services and the second shall be within thirty (30) calendar days after a Notice to Proceed with Construction Services for each "major" Guaranteed Maximum Price (GMP) Proposal executed.

3.1.3 Contractor's attendance at the Planning and Scheduling Workshop(s) and Owner's acceptance of the Baseline Project Schedule is a condition precedent to the Contractor submitting initial and any subsequent progress payments.

3.2 BASELINE PROJECT SCHEDULE SUBMITTAL

3.2.1 The Baseline Project Schedule shall be submitted to the Owner <u>with the required Float</u> within sixty (60) calendar days from the effective date of the Notice To Proceed for Pre-Construction and/or Construction Services (or as approved by the Owner in the Project Planning Scheduling Workshop).

3.2.1.1 A Baseline Project Schedule that does not have at least the minimum amount of Float at submission will result in the Contractor forfeiting all claims to Project Schedule extensions and/or delays as a result of Contract changes and/or excusable delays as described in the UGC.

3.2.1.1.1 If conditions arise prior to submission of the Baseline Project Schedule that are <u>beyond the Contractor's control</u>, the Contractor shall include an Executive Summary with the Baseline Project Schedule to justify the reduction in Float.

3.2.1.2 For CM-R and DB projects, the Baseline Project Schedule shall include identified Milestone and/or Summary Tasks for the remaining Work that has not been approved in an executed GMP Proposal for Construction Services.

3.2.1.2.1 When the Owner has approved the "full" scope of the Project (i.e. the last GMP Change Order has been executed), the Contractor shall coordinate with the Owner to "reset" the Baseline Project Schedule.

3.2.2 The Contractor shall submit one (1) electronic copy of the entire Baseline Project Schedule and one (1) paper copy of the following Baseline Project Schedule reports to the Owner within ten (10) calendar days when the "full" scope of the Project as been approved:

3.2.2.1 <u>Graphic Time-Scaled Report or Gantt Chart</u>: A graphic time-scaled view including all activities, early start and finish dates, estimated durations and Float sorted by Activity Code.

3.2.2.2 <u>Milestone Activity Report</u>: A listing of every Milestone Task and critical path sorted by early start date.

3.2.2.3 <u>Detailed Activity Report</u>: A listing of every Detailed Task sorted by early start date including a fully completed predecessor and successor column.

3.2.3 When the Owner has approved the initial Project Schedule, it shall be referred to as the Baseline Project Schedule, and shall be used for all future Project Schedule updates and reports as "BPS1."

3.2.3.1 For CM-R and DB projects, the Project Schedule shall include Milestone and Summary Tasks until thirty (30) calendar days prior to the submittal of a GMP Proposal for Construction Services. The Project Schedule shall also include Detailed Tasks for at least the first ninety (90) calendar days of Construction Services when submitted with the GMP Proposal.

3.3 UPDATING THE PROJECT SCHEDULE

3.3.1 When the Owner has approved the Baseline Project Schedule, the Contractor shall update the Project Schedule for Pre-Construction and Construction Services at least once per calendar month and submit reports at least seven (7) calendar days prior to the Owner's monthly Project Progress Meeting.

3.3.1.1 Project Schedule updates shall be based on actual Work progress, current logic, and remaining durations.

3.3.1.2 The Owner will determine which meeting will be designated as the Owner's monthly Project Progress Meeting.

3.4 MONTHLY PROJECT SCHEDULE REPORTS

3.4.1 The Data Date for all Project Schedule Update Reports shall be current within five (5) calendar days of submission to the Owner.

3.4.2 Contractor shall submit a Total Float usage log with Contractor's monthly Project Schedule Update Reports that identifies the number of days lost or gained each month.

3.4.3 Owner retains the authority, which shall not be unreasonably withheld, to approve or reject Contractor's utilization of Total Float. If Contractor desires to utilize a portion or all of the Total Float, Contractor must submit a written request with its monthly Total Float usage log to the Owner seeking Owner's written approval of utilization of Total Float.

3.5 SUBMITTING MONTHLY PROJECT SCHEDULE REPORTS

3.5.1 The Contractor shall submit one (1) electronic schedule back-up in ".mpp" format and one (1) paper copy of the Project Schedule to the Owner.

3.6 FORMATING PROJECT SCHEDULE REPORTS

3.6.1 Electronic copies shall be submitted on compact discs and as attachments to electronic mail.

3.6.1.1 All electronic Project Schedule submittals shall be "backups" created in the specified software and included on the website if required, within one (1) calendar day of required completion.

3.7 PROJECT SCHEDULE SLIPPAGE

3.7.1 If the Project Schedule indicates schedule slippage for two (2) consecutive calendar months or if the Owner notifies the Contractor of a determination that the Work is behind schedule, the Contractor shall develop a "Recovery Plan" to make immediate revisions to the work force, work-hours, shifts, material deliveries, or any other aspects of the Work.

3.7.2 The Contractor shall submit the “Recovery Plan” to the Owner, as required in the UGC, clearly describing all changes in the Project Schedule or work enacted and/or planned in order to ensure completion by the Contract Substantial Completion date.

3.7.2.1 The Owner has the right to review and comment on any “Recovery Plan” activities that include Owner participation or affect any Owner consultants or outside contractors.

3.7.3 When the Owner approves the “Recovery Plan”, the Contractor shall incorporate the proposed revision into the Baseline Project Schedule.

3.8 PROJECT SCHEDULE CHANGES

3.8.1 If the Owner or Architect/Engineer issues a Change Proposal, the Contractor shall submit a proposed revision for all proposed Contract changes that affect the Substantial Completion date or remaining Float with the Change in Work Cost Analysis Form.

3.8.1.1 Proposed revisions shall be accompanied by a narrative listing of the affected activities including a statement of the expected overall impact of the change proposed.

3.9 EXCUSABLE DELAYS AND TIME EXTENSIONS

3.9.1 Excusable delays shall be administered per the UGC.

3.9.2 If an excusable delay extends the Contract Substantial Completion date, the Owner may extend the Contract time by the number of excusable calendar days lost on the Project Schedule or take other actions as appropriate under terms of the Agreement.

3.9.2.1 Change Proposal pricing that does not impact the Substantial Completion date or does not include a proposed revision prior to approval by the Owner shall not include a time extension.

3.9.3 Once the Owner accepts a time extension and authorizes the Contractor to proceed with the Contract change, the proposed revision shall be incorporated into the Baseline Project Schedule.

END OF SECTION 01 32 00

SECTION 01 35 16 – ALTERATION PROJECT PROCEDURES

PART 1 - GENERAL

1.01 RELATED DOCUMENTS

A. Drawings and general provisions of the Contract, including General Conditions and Division 01 Specification Sections, apply to this Section.

B. Specifications throughout all Divisions of the Project Manual are directly applicable to this Section, and this Section is directly applicable to them.

1.02 SUMMARY

A. Basic and supplemental requirements for Work that alters existing facility components, systems or equipment.

1.03 REFERENCE STANDARDS

A. The latest published edition of a reference shall be applicable to this Project unless identified by a specific edition date.

B. All reference amendments adopted prior to the effective date of this Contract shall be applicable to this Project.

C. All materials, installation and workmanship shall comply with the applicable requirements and standards addressed within the Contract Documents.

1.04 DEFINITIONS

A. Cutting: Removal of in-place construction necessary to permit installation or performance of other Work.

B. Patching: Fitting and repair work required to restore surfaces to original conditions after installation of other Work.

C. Demolish: Completely remove and legally dispose of off-site.

D. Remove: Detach items from existing construction and legally dispose of them off-site, unless indicated to be removed and salvaged or removed and reinstalled.

E. Remove and Salvage: Detach items from existing construction and deliver them to Owner [ready for reuse].

F. Remove and Reinstall: Detach items from existing construction, prepare them for reuse, and reinstall them where indicated.

G. Salvage: Carefully detach from existing construction, in a manner to prevent damage, and deliver to Owner [ready for reuse]. Include fasteners or brackets needed for reattachment elsewhere.

H. Recycle: Recovery of demolition waste for subsequent processing in preparation for reuse.

I. Existing to Remain: Existing functional items of construction that are not to be removed and that are not otherwise indicated to be removed, removed and salvaged, or removed and reinstalled.

J. Sensitive Area: The following areas are considered “Sensitive” by MD Anderson Cancer Center:

1. Sensitive Areas listed apply to human and animal occupancies.

2. Additional areas may also be considered Sensitive as determined by MD Anderson Cancer Center for a particular project. The Contractor shall coordinate with the Owner’s Project Manager prior to any installation Work to identify Sensitive Areas not listed.

a. Operating Rooms

b. Invasive Procedure Rooms

c. Bone Marrow Transplant / Protective Environment Areas

d. Intravenous Procedure Rooms (Chemotherapy)

e. Intensive Care

f. Inpatient Recovery Rooms

g. Sterile Supply Storage

h. Sterile Processing

i. Pharmacy I V Admixture

j. Pharmacy Drug Preparation

k. Pharmacy Drug Storage

l. Food Preparation, Storage, Serving

m. Data Centers

n. Electrical Equipment Rooms

o. Telecommunication Rooms

p. Potable Water Storage Tanks

q. Any Room Containing Imaging Equipment that May be Damaged Due to Water Leakage (MRI, Cat Scan, Etc.)

r. Animal Holding Rooms

s. Animal Procedure Rooms

t. Laboratory Clean Rooms

1.05 QUALITY ASSURANCE

A. Perform remodeling, alteration, demolition, cutting, patching, removal, refinishing, relocation, and disposal work in accordance with Federal, State, and local health and safety standards, codes, ordinances, and the University of Texas MD Anderson Cancer Center Institutional Safety Policies. Where conflicts occur, comply with the more restrictive requirements.

B. Perform remodeling, alteration, demolition, cutting, patching, removal, refinishing, and relocation work in such a manner as to preserve the aesthetic and structural integrity of materials and construction.

C. When the Contractor determines that it is unavoidable to locate new fan coil units, drainage piping, or waste piping above a Sensitive Area, the Contractor shall notify the Owner's Project Manager in writing and obtain a clear direction to proceed prior to any installation of Work.

D. When the Contractor determines that an existing penetration cannot be sealed due to accessibility, constructability or any other condition, the Contractor shall notify the Owner's Project Manager in writing and obtain a clear direction to proceed prior to any installation of Work.

E. When the Contractor determines that an existing fan coil unit cannot be relocated beyond the perimeter of a Sensitive Area, the Contractor shall notify the Owner's Project Manager in writing and obtain a clear direction to proceed prior to any installation of Work.

F. Portions of the existing remaining medical vacuum and gas systems affected by Work within this Project shall be re-certified in strict accordance with NFPA 99.

1.06 SUBMITTALS

A. Submit schedule for all proposed shut-downs prior to start of Work. The Contractor shall notify the Owner's Construction Inspector and the Owner's Project Manager, in writing, of any planned utility outages in accordance with Owner's Special Conditions.

B. Work with noise-producing equipment is subject, at all times, to Owner's approval of entire procedure. Submit a schedule of all such operations to the Owner's Project Manager at least two weeks in advance of need and secure approval of the Owner before proceeding.

1.07 NEW AND EXISTING PENETRATIONS

A. All new and existing penetrations through rated partitions and floor slabs within the Project boundary shall be sealed to provide a fire/smoke rating equal to or greater than the rating of the floor slab.

B. All new and existing penetrations through floor slabs within the Project boundary shall be sealed watertight.

1.08 EXISTING COMPONENTS ABOVE SENSITIVE AREAS

A. All existing sanitary waste, sanitary vent and storm drainage piping located within the ceiling or exposed above a Sensitive Area shall be provided with heavy-duty joint connections having a minimum 15 psi pressure rating and meeting the performance criteria of Factory Mutual 1680.3.

B. All existing piping located within the ceilings or exposed above a Sensitive Area receiving cooling coil condensate, ice machine drainage or conveying contents having temperatures below 55 degrees F shall be insulated and vapor sealed to prevent condensation.

C. Existing fan coil units located within the ceiling or exposed above a Sensitive Area shall be relocated to a position beyond the Sensitive Area.

1.09 JOB CONDITIONS

A. Visit the Project Site to determine by inspection all existing conditions, including access to the Site, the nature of structures, objects, and materials to be encountered, and all other facts concerning or affecting the Work. Information on the Drawings showing existing conditions does not constitute a guarantee that other items may not be found or encountered.

B. Obvious existing conditions, installations, and obstructions affecting work of this Section shall be taken into consideration as necessary work and included as part of work of this Section, the same as though completely shown or described.

C. Seal off areas in which work is in progress from the occupied portions of the building to prevent entry of dust and noise into occupied portions of the building. Take all necessary measures to limit the amount of dust and dirt rising and scattering in the air to the lowest practical level.

   1. Where Work occurs immediately adjacent to occupied portions of the building, construct dust-proof partitions of nominal 3-5/8 inch metal studs with 5/8-inch Type X drywall, full height on both sides. Tape joints on the occupied side at non-fire rated partitions. Tape both sides full height at fire rated partitions. Fill partition cavity with sound-deadening insulation.

   2. Equip partitions with dustproof doors and security locks.

D. If temporary closures block required exits, provide closures with acceptable openings equipped with gasketed, self-closing doors that open in the direction of exit as approved by authorities having jurisdiction.

E. Provide temporary barricades and other forms of protection to protect Owner's personnel and general public from injury due to remodeling work.

   1. Provide protective measures as required to provide free and safe passage of Owner's personnel and general public to occupied portions of building.

   2. Erect temporary covered passageways as required by authorities having jurisdiction.

   3. Provide interior and exterior shoring, bracing, or support to prevent movement, settlement, or collapse of structure or element to be demolished and adjacent facilities or work to remain.

   4. Protect from damage existing finish work that is to remain in place and becomes exposed during remodeling operations.

   5. Protect floors with suitable coverings when necessary.

   6. Cover and protect furniture, equipment, and fixtures from soilage or damage when demolition work is performed in areas where such items have not been removed.

   7. Provide temporary weather protection during interval between demolition and removal of existing construction on exterior surfaces and installation of new construction to ensure that no water leakage or damage occurs to structure or interior areas of existing building.

   8. Remove protections at completion of work.

F. Furnish and maintain temporary types of protection as necessary to adequately protect and prevent accidental injury to the public, Owner's personnel and personnel employed at the work. Take all necessary precautions to keep trespassers out of work areas. Properly secure work areas from entry when work is not in progress.

G. Conduct demolition and removal operations and the removal of debris to ensure minimum interference with roads, streets, walks, and other adjacent occupied or used facilities. Do not close or obstruct streets, walks, or other occupied or used facilities without permission from authorities having jurisdiction. Provide alternate routes around closed or obstructed traffic ways if required by governing regulations.

1.10 TEMPORARY ELEVATOR USE

A. Designated existing elevators may be used by construction personnel and for materials. Coordinate use with Owner. Provide protective coverings for finish surfaces of cars and entrances.

1.11 EXISTING UTILITIES AND CONDITIONS

A. The location and description of utilities and conditions shown on Drawings are indicated from information available and are approximate only. Verify existing utilities and conditions.

B. Protect existing utilities and conditions from damage. Repairs to utilities and conditions damaged during the Work shall be the responsibility of the Contractor and shall be made promptly at no additional cost to the Owner.

C. Maintain existing utilities in operation at all times except where specific permission is given by Owner's Project Manager. Support and protect all exposed piping and utilities during demolition and utility rough-in.

D. All outages of utilities, sidewalks, parking areas, driveways or facility access shall be scheduled in advance with Owner in accordance with Owner's Planned Utility Outage Procedure as specified within Section 00 25 00 – Owner's Special Conditions.

E. Notify the Owner's Project Manager and all concerned parties prior to disconnecting and terminating abandoned utilities.

1.12 REMOVAL OF EXISTING CONSTRUCTION

A. Where permanently disconnecting domestic water, medical vacuum, medical gas, natural gas, treated water, drainage, vent, or other piping serving removed fixtures, inlets, outlets or equipment, remove all associated piping back to remaining active mains.

B. All existing floor drains that will not remain in service after Project completion shall be isolated from the remaining active building drainage and vent system. Floor drain bodies remaining within slabs shall be sealed watertight. Slab shall be finished to allow specified application of flooring or to match surface of the adjacent finished area. Completed patching of the slab shall prevent the passage of water and provide a structural integrity and fire rating equal to or greater than the existing slab. Remove all associated piping serving decommissioned floor drains located in suspended slabs back to remaining active mains.

C. All existing wall penetrations that will be unused due to removal of piping shall be permanently sealed to maintain the fire rating of the wall or floor.

D. All existing floor penetrations that will be unused due to removal of piping shall be permanently sealed to maintain the fire rating of the floor and to provide a watertight seal.

E. All existing supports serving removed piping, duct, conduit and equipment shall be removed.

F. Carefully remove and store all items indicated or required to be reused.

G. Perform demolition and removal work completely and remove debris from the Site. Use such methods as required to complete the Work within the limitations of governing regulations.

1. Proceed with demolition and removal work in a systematic manner, from the top to the bottom in areas indicated.

2. Remove debris in covered carts to limit air pollution.

3. Locate demolition equipment throughout the structure and remove materials so as to not impose excessive loads to supporting walls, floors, or framing.

4. Remove debris from elevated portions of building by chute, hoist, or other device that will convey debris to grade level in a controlled descent.

H. Fire, Smoke and Fire/Smoke Dampers

1. Contact and coordinate with Owner's Environmental Health and Safety (EH&S) Department to identify existing dampers within the Project Boundary that are not indicated within Construction Documents and to determine acceptable actions to be taken.

2. When the Engineer and Owner's Environmental Health and Safety (EH&S) Department have determined that an existing fire, smoke, or fire/smoke damper is no longer required, the damper shall be decommissioned and removed from the Project site.

a. Disconnect operational and monitoring services and associated accessories.

b. Record and submit to Owner the device location, identification information, and monitoring connections.

3. Where complete removal is not an option, Contractor shall propose an alternate method of decommissioning, to be approved by EH&S. Such dampers shall be physically tagged stating that they have been decommissioned.

I. Cutting:

1. Structural Elements: If not specifically shown, but removal or alteration is required, perform such removal or alteration only upon written approval of the Architect/Structural Engineer. Do not damage or alter any structural element of the existing building. Where drilling or fastening to post-tensioned reinforced concrete construction is required, X-ray existing structure to determine tendon locations and potential for tendon tension release before proceeding. Notify Architect/Structural Engineer in each instance when conflict occurs. Architect/Structural Engineer will determine corrective action required. Do not proceed until corrective action has been received.

2. Concrete: Saw cut where exposed to view. Jack hammering with electric or pneumatic equipment is acceptable only with scheduled approval of Owner.

3. Masonry: Cut back masonry to joint lines and remove old mortar allowing space for repairs.

4. Ceramic, Structural Clay Tile, and Quarry Tile: Saw cut to natural joint lines; remove so that repairs or continuations of new work will be relatively imperceptible.

5. Resilient Tiles: Remove in whole units to natural breaking points and/or straight joint lines with no damaged or defective existing tiles remaining where joining new construction.

6. Plaster: Cut back to sound plaster on straight lines, and back bevel edges of remaining plaster. Trim and prepare existing lath for tying of new lath.

7. Woodwork: Cut back to a joint or panel line.

8. Existing Doors, Frames, and Sash: Remove in such manner as to facilitate filling in of openings or installation of new work, as required by the Drawings.

9. Cutting for Access to Mechanical and Electrical Systems: Removal of existing ceilings and the removal, cutting, and patching and replacement of existing walls and floors as may be necessary for access to valves, piping, conduit, and tubing by mechanical and electrical trades shall be included and performed as an obligation of, and as directed by the Contractor and accepted by the Owner.

J. Patching, Repairing, and Finishing Existing Work:

1. Perform in compliance with the applicable requirements of the Specification technical Section covering the work to be performed and the requirements of this Section.

   a. All holes and damaged areas exposed to view in ceilings, walls, and floors of all finished spaces shall be repaired. Repaired construction shall match existing adjacent construction and finish, unless otherwise indicated or specified.

   b. Minor surface abrasions, small nail holes, cracks, aged checked natural wood finish and other similar deterioration not visible, when viewed under finished lighting conditions, from a distance of 6 inches will not be required to be repaired if the base material is sound and suitable to receive the scheduled finishes, if any.

   c. Interior penetration holes in walls and ceilings of unfinished spaces and spaces not exposed to view shall be grouted and sealed with accepted materials to equal the sound seal and fire resistance rating of original construction.

   d. Penetration holes through exterior walls above grade shall be grouted and sealed as required to produce a weather tight seal.

   e. Penetration holes through exterior walls below grade shall be grouted and sealed to produce a watertight seal.

2. Concrete: Edges of existing concrete shall be kept damp for 24 hours and scrubbed with neat portland cement grout just before new concrete is placed; in lieu thereof, an accepted epoxy concrete adhesive may be used. Finish shall match existing adjoining work. Unless otherwise specified, all concrete for patching shall be 3,000 psi concrete. Reinforcing bars and dowels shall be provided where required. Where installation of concrete is impracticable, the openings shall be filled with dry packed non-shrink grout as directed.

3. Masonry: Patch with sound whole units to match existing. Joints shall match adjoining surfaces.

4. Lath: Lath areas to be patched as required, install as required for new lath, and wire-tie to existing lath at edges at 6 inch (15.2 cm) intervals. Lap lath 3 inch (7.6 cm) minimum.

5. Plaster: Dampen edges of existing plaster. Plaster patching shall be 3 coat work of type, thickness, and finish to match the existing work.

6. Damages: Promptly repair damages to adjacent facilities caused by demolition and removal operations at no additional cost to the Owner.

7. Painting and Finishing:

   a. Preparation: Prepare patched areas as required for new work. Wash areas to be repainted with neutral soap or detergent, thoroughly rinse, and sand when dry. Feather remaining paint edges smooth with sandpaper.

   b. Painting and Finishing: Conform to the applicable provisions of Painting Section. Prepare and build up bare areas and patches in existing painted surfaces with proper primer and intermediate coats, sand smooth and flush with adjoining surfaces. Paint all areas scheduled to be painted and/or repainted as specified in Painting Section of the Specifications, except the first or primer coat may be omitted on existing painted surfaces.

K. Disposal of Debris: Clean up all material, debris, and rubbish resulting from remodeling work, remove from the building and Site, and legally dispose of. Leave all areas of work in “broom clean” condition.

   1. All debris shall be transported out of the building in covered carts with no materials extending above the cart rim.

PART 2 - PRODUCTS

2.01 GENERAL

A. All materials shall meet or exceed all applicable referenced standards, federal, state and local requirements, and conform to codes and ordinances of authorities having jurisdiction.

B. Matching Existing Work: Except where otherwise specifically indicated or specified as a definite change, the finish materials and appearance of the new work shall match the existing contiguous materials and finishes in all respects. Repairs and/or continuations of existing work shall be relatively imperceptible in the finished work when viewed under finished lighting conditions from a distance of 6 feet (1.8 meters).

PART 3 - EXECUTION

3.01 SEQUENCING AND SCHEDULING

A. Schedule Work so as to impose a minimum of hardship on the present operation of the facilities and the performance of the work of other trades.

B. Maintain existing utilities indicated to remain; keep in service and protect against damage during demolition and removal operations.

C. Do not interrupt existing utilities serving occupied or used facilities, except when authorized in writing by Owner. Provide temporary services during interruptions to existing utilities, as acceptable to the governing authorities.

3.02 POST DEMOLITION CONFERENCE

A. Coordinate, schedule and conduct post demolition meetings prior to installation of new Work.

1. Purpose: Communicate existing conditions revealed by demolition that are not identified on Contract Drawings. Determine scope, cost and schedule impacts and obtain a clear direction to proceed.

2. Attendees: Contractor, Owner's Project Manager, Owner's EH&S Representative, Architect/Engineer.

3.03 INSTALLATION

A. Check Drawings carefully and thoroughly investigate existing building construction.

B. Protect work to remain from damage. Use barricades, tarpaulins, temporary walls, plywood, planking, masking, and other suitable means and methods as accepted.

1. Restore accidental or careless damage to work to remain in place to a condition as good as or better than existed before work was commenced and at no additional cost to the Owner.

C. Provide all shoring and bracing necessary to positively protect existing elements of the building. Use material adequate to support anticipated loads with a properly calculated margin of safety. Provide for transfer of stresses to successively lower construction.

D. All work must be staged and performed so that disruption to occupied areas is minimized and so that these areas are available and suitable for their intended use during normal hours of operation. Any work that would incur excessive noise, dust, or disruption must be scheduled in advance with the Owner's Project Manager.

E. Carefully remove and replace items of existing construction indicated to remain upon completion of the Contract, but which require removal to complete the work. Match condition of construction prior to the start of the Work unless otherwise required. Carefully remove items indicated for relocations in new Work, or to be retained by Owner, to avoid damage, thoroughly clean, and reinstall as indicated or store as directed.

F. Items of salvable value to the Contractor may be removed from the structure as the work progresses. Salvaged items must be transported from the Project Site as they are removed. Storage or sale of removed items on the Project Site will not be permitted.

1. Remove and dispose of all demolition materials, equipment and debris off premises, unless identified for salvage on the drawings. Deliver salvaged items to a location within a 5 mile radius of MD Anderson as directed by the Owner's Project Manager. Protect and store all items identified for reuse. Contractor assumes no salvage value for items removed and not reused in the Project.

END OF SECTION 01 35 16

SECTION 01 35 23 – PROJECT SAFETY REQUIREMENTS

PART 1 – GENERAL

1.1 OVERVIEW

Owner's objective is an injury and incident-free project, with a focus on project safety that shall not be compromised to achieve any other business objective. Contractor shall structure an effective and systematic safety management approach that emphasizes continuous safety process improvement.

Owner has included in this specification numerous safety requirements that are noticeably more stringent than that of the Occupational Safety and Health Administration (OSHA). The reader will see text throughout this specification, matching the format of this paragraph, and is intended to call attention to the fact that the requirement being described is more stringent than that of OSHA. However, this does not relieve the reader from reading and understanding the entire Specification.

1.2 GENERAL REQUIREMENTS

Owner recognizes that Contractor and Subcontractors may have existing safety management programs with established safety policies, processes, procedures, and work practices. Owner will support these where they prove to be as effective and meet the intent and purpose of this Section. Upon request by Owner, Contractor and/or Subcontractors (of any tier) shall promptly produce and provide copies of any required documents related to Project safety. Where opportunities for improvement are identified, Contractor and Subcontractors (of any tier) shall work collaboratively with Owner in making appropriate revisions to progress toward an injury and incident-free workplace.

1.3 DEFINITIONS

1.3.1 The term "Owner's Safety Representative" (OSR) as used throughout the Contract Documents shall refer to any construction safety professional(s) who are acting on behalf of Owner.

1.3.2 The term "Project Safety Coordinator" (PSC) as used throughout the Contract Documents shall refer to Contractor's construction safety professional who is acting on behalf of Contractor and who shall be responsible for safety training, inspections, incident investigations, record keeping, reporting, incident response, and claims management, and shall serve as the technical advisor to Contractor's project staff for all safety issues.

1.3.3 The term "Project Safety Assistant(s)" (PSA) as used throughout the Contract Documents shall refer to any Contractor's construction safety professional who is acting on behalf of Contractor and who shall perform safety related tasks as delegated by the PSC.

1.3.4 The term "Subcontractor's Safety Representative" (SSR) as used throughout the Contract Documents shall refer to a person employed by the Subcontractor (of any tier) who is identified as the recognized safety representative and who possesses the proper credentials for the position. The SSR is understood to be the immediate supervisor unless identified and documented

otherwise. All Subcontractors (of any tier) shall provide at least one recognized SSR anytime the Subcontractor (of any tier) is working on the project.

1.3.5 The term "qualified" as used throughout this Section shall match the definition within the OSHA construction safety standards (Title 29 CFR, Part 1926). *Qualified means one who, by possession of a recognized degree, certificate, or professional standing, or who by extensive knowledge, training, and experience, has successfully demonstrated the* ability *to resolve problems relating to the subject matter, the work, or the Project.*

1.3.6 The term "competent" as used throughout this Section shall match the definition within the OSHA construction safety standards (Title 29 CFR, Part 1926). *Competent person means one who is capable of identifying existing and predictable hazards in the surroundings or working conditions which are unsanitary, hazardous, or dangerous to employees, and who has authorization to take prompt corrective measures to eliminate them. In addition to the OSHA standard, this person must be trained and knowledgeable in the construction and/or operation of specific equipment or a specific work method and show proper documentation to support such training. Basic awareness training will not be acceptable for this position.*

1.3.7 The term "Construction Area" as used throughout this Section shall refer to the portion of Owner's property that is released to Contractor's care and control and is designated by Contractor as the space where actual construction efforts will be undertaken to execute the Work.

1.3.8 The term "Administration Area" as used throughout this Section shall refer to the portion of Owner's property that is released to Contractor's care and control and is designated by Contractor as the space where support efforts will be undertaken to provide administrative needs for the Work. If the Project has project office trailers within the confines of Owner's property, that space and the parking area around it may be designated as an Administration Area.

1.3.9 The term "worker" as used throughout this Section shall refer to any person who is assigned specifically to the Project, has successfully completed the Project safety orientation, and has been issued a project-specific ID badge.

1.3.10 The term "visitor" as used throughout this Section shall refer to any person who is not assigned specifically to the Project. Visitors will not be issued a project-specific ID badge and shall not be allowed access to the "construction areas" unless they are escorted by a member of Contractor's project management staff or an Owner representative.

1.3.11 The term "Owner's Designated Representative" (ODR) as used throughout the Contract Documents shall refer to the individual(s) assigned by Owner to act on its behalf, and to undertake certain activities as specifically outlined in the Contract. For the purposes of this specification section, the words "Owner" and "Owner's Designated Representative" are interchangeable.

1.3.12 Capitalized terms not defined above shall have the meanings set forth in the Agreement or the Uniform General Conditions for University of Texas System Building Construction Contracts (UTUGCs), as appropriate, unless the context clearly requires otherwise.

1.4 PURPOSE

1.4.1 Contractor shall bear overall responsibility for all aspects of safety for the Project.

1.4.2 Contractor shall, at all times, provide adequate resources, equipment, training, and documentation to:

1.4.2.1 Comply with the requirements of this Section and all applicable federal, state, and local statutes, standards, and regulations.

1.4.2.2 Provide a safe work environment at the Project.

1.4.2.3 Instill a culture of safe behavior in all supervisors and workers.

1.4.2.4 Ensure a universal understanding that safety and health issues take precedence over all other considerations at the Project.

1.4.3 In any circumstance where this Section differs from, or conflicts with any statutory requirement, the more stringent shall apply.

1.4.4 The ODR reserves the right to have any person removed from the Project for disregarding Project safety requirements. Removal of the Project Superintendent, Project Manager, any Supervisor, PSC, PSA or SSR may result in work stoppage that will remain in effect pending approval of a suitable replacement. Contractor shall not be allowed any consideration for time or monetary compensation for said stoppage.

1.4.5 The ODR reserves the right to deduct from the Contract Sum any safety related expenses that Owner incurs as a result of Contractor's, or any Subcontractor's, failure to comply with the requirements of this Section.

1.4.6 The ODR will deny requests for time extensions and/or monetary considerations whenever Owner intercedes on behalf of safety compliance as a result of Contractor's, or any Subcontractor's, failure to act as required by Contract.

1.5 RELATED DOCUMENTS

In addition to specific references indicated herein, Contractor's attention is also directed, but not limited, to the following publications and documents:

1.5.1 Current edition of the Uniform General Conditions for University of Texas System Building Construction Contracts (UTUGC);

1.5.2 Owner's Special Conditions;

1.5.3 Current edition of OSHA Safety Standards for the Construction Industry, CFR Title 29, Part 1926.

PART 2 – PRODUCT

2.1 PROJECT SAFETY COORDINATOR (PSC)

2.1.1 Contractor must provide a qualified Project Safety Coordinator (PSC). The PSC is required from the commencement of construction until at least such time as Owner's Designated Representative (ODR) issues certification of Substantial Completion. ODR's written concurrence is needed prior to PSC removal. Overall recent career experience must include at least seven (7) years that have been dedicated solely to building construction safety with at least five (5) years of construction safety process management experience. Any candidate that has completed a four (4) year degree in a safety-related discipline must show at least three (3) years of actual field experience in safety to qualify for a PSC position. The PSC must have practical knowledge, working experience, and documented continuing education in fall protection, scaffolds, excavation, confined space, crane/equipment operations, electrical, incident investigation, and other such safety/health related training. Training of less than four (4) hours in duration per topic will not be considered acceptable for this requirement. Continuing education of noted training must be dated within five (5) years of the Effective Date of the Agreement. OSHA 10/30-hour Construction Outreach or OSHA 510 certificates will not be acceptable for this training requirement. The PSC shall possess a certificate of completion for the OSHA 500 (Train the Trainer in Occupational Safety and Health for Construction Industry) or OSHA 502 (Update for the Construction Industry Outreach Trainer). The PSC must show evidence of specialized training for Emergency First Aid, Cardio Pulmonary Resuscitation (CPR), and Automatic External Defibrillator (AED) current to within two (2) years. Formal submittal of proof must be provided prior to acceptance and before any portion of the Work will be allowed to commence. Owner reserves the right to determine acceptability of the submitted training. Any candidate proposed that does not meet these minimum qualifications will not be accepted.

2.2 PROJECT SAFETY ASSISTANT (PSA)

2.2.1 Project Safety Assistant(s) (PSA(s)) are also required. Number of and placement on the Project is determined by the final contracted construction amount and average daily work force. Primary recent experience of any proposed PSA, must include at least five (5) years that have been dedicated solely to building construction safety. The PSA must have practical knowledge, working experience, and documented continuing education in fall protection, scaffolding, excavations, confined spaces, crane/equipment operations, electrical, incident investigation, and other such safety/health related training. Training of less than four (4) hours in duration per topic will not be considered acceptable for this requirement. Continuing education of noted training must be dated within five (5) years of the executed contract. An OSHA 10/30 Construction Outreach or OSHA 510 certification will not be acceptable for this training requirement. The PSA shall possess a certificate of completion for the OSHA 510 (Occupational Safety and Health Standards for the Construction Industry) or the OSHA 500 (Train the Trainer in Occupational Safety and Health for Construction Industry) or OSHA 502 (Update for the Construction Industry Outreach Trainer) in addition to the continuing education requirements previously noted. The certificate must be dated within five (5) years of the Effective Date of the Agreement. The PSA must show evidence of specialized training for Emergency First Aid, Cardio Pulmonary Resuscitation (CPR) and Automated External Defibrillator (AED) current to within two (2) years. Formal submittal of proof must be provided prior to acceptance. Owner reserves the right to determine acceptability of the submitted training. Any candidate proposed that does not meet these minimum qualifications will not be accepted.

2.2.1.1 On projects over $180 million, the option of a PSA-IT (In-Training) may be considered for the required third PSA after the initial qualified PSAs are already active on the project. At no time shall a PSA-IT be used as a permanent substitute in place of a fully qualified PSA

when required. Qualifications for individuals seeking PSA-IT classification shall comply with one of the following options:

2.2.1.1.1 Option I (College Degree in Safety) - Individuals that have obtained a Bachelor's or Master's Degree in Safety

1. The safety degree will count for four (4) years of the five (5) years currently required for a PSA position.
2. Successful achievement of a nationally recognized safety certification (CSP, CHST). Owner reserves the right to determine years of credit based on the recognition of the certification, requirements to achieve certification, and continuing education to maintain certification. This option can be used to add additional experience.
3. Successful completion of one (1) year of dedicated safety work experience on the Project.

Once this individual completes all the requirements indicated above for this option, the "In Training" will be dropped and the individual will be consistent with the current requirements of this Section.

or

2.2.1.1.2 Option II (Field Experience Only) - Individuals that have a minimum of seven (7) years in the construction industry and two (2) years of safety responsibilities that are ancillary to their primary duties

1. The experience noted above will count for two (2) years of the five (5) years currently required for a PSA position.
2. Must have documented successful completion of initial training (minimum of eight (8) hours) each in cranes, electrical, fall protection, excavations and soil mechanics, scaffold, permit–required confined space, and incident investigation and
3. Documented successful completion of Supervisor Safety Training or equivalent from an OSHA Training Institute such as TEEX, UT Arlington, etc.

Once this individual completes all the requirements indicated above for this option, the experience level will be counted as four (4) years of dedicated safety experience. At successful completion of one (1) year of dedicated safety work, the "In Training" will be dropped and the individual will be consistent with the current requirements of this Section.

2.3 PSC AND PSA - Verification of Qualifications

2.3.1 The qualifications and previous work experience of the proposed Project Safety Coordinator and Project Safety Assistant(s) shall be submitted with the RFP. Based on final Contractor selection for the Project, additional information for the Project Safety Coordinator and Project Safety Assistant will be required prior to written acceptance for the position. Prior to Owner issuing a Notice to Proceed with Construction Services, Contractor must provide resumes for the proposed PSC and PSAs. Contractor selection for the project does not guarantee proposed PSC and/or PSA acceptance. Any PSC or PSA additions or changes after the original acceptance date(s) must be formally submitted for consideration to Owner. In the case of the PSC, work shall not be allowed

to commence prior to written acceptance by Owner. In the case of the PSAs, each must be assigned to the project on or before the worker count reaches the numbers indicated in Sections 2.4 and 2.5. Any cost related to Contractor's failure to meet this requirement will not be reimbursed by Owner and extension of the Contract Time will not be allowed.

2.3.2 For two (2) years of military service that demonstrates construction safety experience or an Associate's Degree in the field of safety, two (2) years of required experience will be credited for the requirements listed above. For four (4) years of military service that demonstrates construction safety experience or a Bachelor's (Undergraduate) Degree in a safety related field, four (4) years of required experience will be credited for the requirements listed above. Military experience and/or degree will only receive credit once. A professional certification in a safety related field (CSP, OHST, CHST, etc.) may receive credit for up to four (4) years of experience in addition to the years noted above. The ODR reserves the right to determine year(s) of credit based on recognition of certification, requirements to receive certification, and continuing education requirements to maintain certification.

2.4 PSC AND PSA – Determining the Number of Required PSCs and PSAs

2.4.1 The total number of PSCs and PSAs for a Project will be determined by the anticipated total cost for construction services for the completed project using the values below:

2.4.1.1 For projects up to and including Ten Million Dollars ($10,000,000), only the PSC shall be required.

2.4.1.2 For projects over Ten Million Dollars ($10,000,000) and up to and including Thirty Million Dollars ($30,000,000), the PSC and the initial PSA will be required. For projects over Thirty Million Dollars ($30,000,000) and up to and including One Hundred and Eighty Million Dollars ($180,000,000), the PSC, initial PSA and an additional PSA will be required. For projects over One Hundred and Eighty Million Dollars ($180,000,000), the PSC, initial PSA, and two (2) additional PSAs will be required. Based on scope of work and/or anticipated hazard(s), additional PSA(s) may be required. Any additional PSA(s) beyond those noted above shall be determined and negotiated by Owner prior to submittal of a Guaranteed Maximum Price (GMP) Proposal.

2.5 PSC AND PSA -- Placement on the Project and Removal from the Project

2.5.1 The placement and removal of the PSC and any PSA for the Project will be determined by the daily population of persons, using the following:

2.5.1.1 One (1) PSC shall be provided by Contractor and shall be assigned full time, have no duties other than safety, and be dedicated daily to the Project from the commencement of construction activities until at least Substantial Completion. Owner's written concurrence is required prior to release.

2.5.1.2 The initial one (1) PSA shall be provided by Contractor and shall be assigned full time, have no duties other than safety, and be dedicated daily to the Project at the time that the daily population reaches twenty-five (25) persons, and shall remain on the Project until at least

Substantial Completion and the population decreases to less than 25 persons. Owner's written concurrence is required prior to release.

2.5.1.3 The second PSA shall be provided by Contractor and shall be assigned full time, have no duties other than safety, and be dedicated daily to the Project when the daily population at the Project rises to one hundred and fifty (150) persons. Additional PSAs shall be provided by Contractor and shall be assigned full time, have no duties other than safety, and be dedicated daily to the Project when the daily population increases by another increment of one hundred and fifty (150) persons. The additional PSAs shall remain on the Project until the daily population falls below the number that required them to be added. Owner's written concurrence is required prior to release.

2.5.1.4 For Projects that involve multiple phases or stages and scope adjustments through the execution of Change Orders, the value for construction services shall accumulate as additional packages of work are added to the overall Work. If there are significant gaps between the head count of the previous or current Work and the additional Work, Owner will decide if the additional work shall impact only the demand for additional PSAs. The requirement for the PSC will remain as indicated in Section 2.5.1.1.

2.5.1.5 **During scheduled daily work, a full complement of safety persons must be on Site in the numbers as required in Sections 2.5.1.1, 2.5.1.2 and 2.5.1.3. If either the PSC or any of the assigned PSAs will not be on Site during the project work scheduled, Owner must be notified in writing with a detailed plan for replacement no less than two (2) weeks prior to the absence (for non-emergencies only) or as soon as the safety person's status is confirmed (for emergencies only). An acceptable replacement must be provided if the absence will be for more that twenty-four (24) continuous hours in any week or as directed by the ODR. If any other work (nights, weekends, or holidays) is planned, the crew size of that specific shift shall determine the number of safety personnel required, but at least the PSC or one (1) PSA must be on Site during any work activities. The number of safety persons on Site during nights, holidays, or weekends must be with written concurrence of the ODR.**

2.6 SUBCONTRACTOR'S SAFETY REPRESENTATIVE (SSR)

2.6.1 Each Subcontractor, of any tier, shall declare one (1) or more employees to be its designated SSR. The SSR shall be dedicated to the Project for on-site safety responsibilities. This position cannot be delegated to another tiered subcontractor.

2.6.2 The SSR may have collateral duties, but must be on the Site when any part of the applicable Subcontractor's work is being performed. The PSC shall formally approve each SSR prior to the commencement of work for that Subcontractor.

2.6.3 Each Subcontractor's SSR shall possess a certificate of completion for the OSHA 30-hour Outreach Training in the Construction Industry. Remaining tiered Subcontractor SSRs shall possess at least a certificate for the OSHA 10-hour Outreach Training in the Construction Industry. Certificates must be dated within four (4) years of the executed Subcontract. Only a sub-tiered contractor that will have no more than three (3) workers on the project during their

entire scope of work may petition to be excluded from this requirement. Any exception shall be by written approval of Owner.

2.7 CONTRACTOR PROJECT SAFETY MANAGEMENT PLAN (PSMP)

2.7.1 Contractor shall develop, implement, and furnish adequate resources for its PSMP.

2.7.2 The objectives and intent of the PSMP shall include, but not be limited to:

2.7.2.1 Anticipating, planning, controlling and coordinating work to eliminate hazards, minimize risks, and aggressively manage losses involving injuries or property damages;

2.7.2.2 Ensuring education and training for best safety practices by all workers and holding supervisors accountable for safety performance;

2.7.2.3 Documenting and recording preventative measures, establishing inspection, notification, and investigation requirements, and measuring results of performance;

2.7.2.4 Providing protection for adjacent property and safety for the public.

2.7.3 The PSMP shall address the inclusion of Owner SafetyNet Program for electronic collection of safety observations. The terms of this Owner-directed Program shall not be replaced by any existing program including any existing version of the SafetyNet Program already used by Contractor. Within fourteen (14) calendar days of the issuance of the Notice to Proceed with Construction, Contractor shall have available a means to record field observations.

2.7.4 Contractor shall submit a complete draft of the PSMP to Owner for review and written acceptance prior to the issuance of the Notice to Proceed with Construction. Contractor shall incorporate Owner's comments into a final draft and shall resubmit the amended version to Owner within thirty (30) calendar days following the return date of Owner's comments to the initial draft.

2.7.5 Beginning with the Notice to Proceed with Construction, the PSC shall formally evaluate and update the PSMP and its supporting documentation as construction activities dictate, but at least semi-annually to ensure effectiveness and continuous improvement. The PSC must provide means to verify required evaluation and update.

2.8 PERSONAL PROTECTIVE EQUIPMENT (PPE)

2.8.1 PPE shall be required for all persons in the Construction Area. The following items shall be furnished, inspected, and maintained by the worker's employer:

2.8.2 Hard hats shall be ANSI stamped (Z89.1-1997, Type I, Class E, G and C). Hard hats shall be worn 100% of the time in the Construction Area, with the brim forward (or as allowed by the manufacturer). "Cowboy" style hard hats shall not be allowed (even if ANSI stamped). Hard hats with noticeable wear or damage shall be replaced. Each hard hat shall be examined by the PSC or PSA during the Project Safety Orientation to confirm acceptable condition.

2.8.3 Eye protection (Safety Glasses) shall be stamped ANSI Z87. If a worker wears prescription glasses (plastic lens only) that are not marked Z87, the worker's employer shall furnish goggles or safety glasses that are designed to fit over another pair of glasses. Eye protection (Safety Glasses) shall be worn 100% of the time in the Construction Area. Anytime power actuated tools, electric or air operated grinding tools, electric or air operated impact tools, chop saws, masonry saws, chainsaws, or drilling tools are used, double eye and face protection shall be worn. Eye protection must be designed to prevent any air borne material from penetrating between the protection and the eyes.

2.8.4 High visibility vests or high visibility upper body clothing (equivalent to ANSI Class 2 or greater as applicable) shall be worn in the Construction Area. Primary work activities such as traffic control, excavations, rigging from ground level, exterior work at ground level or sub-ground level, earth moving operations may require ANSI Class 3.

2.8.5 Contractor shall purchase and maintain an appropriate inventory of types and sizes to be able to furnish a hard hat, pair of safety glasses and vest for up to ten (10) Owner representatives who may visit the Project.

2.8.6 Hearing conservation and protection shall meet or exceed OSHA requirements. Except for suppression of sound energy level, no devices or equipment shall be placed in or over the ears. Portable radios, cell phones or any other electronic devices shall not be used by the general work force for any reason while in the Construction Area. Use by supervision, project management, and safety persons is allowed for work related and emergency communications only. Any additional persons using these devices must be by written concurrence of the ODR. Music devices with or without ear pieces are strictly prohibited by anyone while in the Construction Area. Contractor may designate an area inside the limits of the Project but outside of the active Construction Area where use of cell phones is allowed during scheduled breaks and lunch only. Location must be by written concurrence of the ODR.

2.8.7 Hand protection that is designed to counter the potential for injury exposure shall be furnished by the worker's employer to each worker who must handle materials or equipment with sharp edges, slick surfaces, chemically reactive components or extreme temperatures.

2.8.8 Respiratory protection shall meet or exceed OSHA requirements.

2.8.9 Foot protection (work shoes) must have soles with a resistance to punctures, uppers that cover the entire foot and ankle and offer resistance to scrapes and cuts. Sandals, open-toed shoes, dress loafers, high-heels, and all athletic style shoes (including those with ANSI markings) are prohibited. The worker's employer shall provide additional protection, such as metatarsal guards, over work shoes (including steel toe boots) to each worker engaged in work activities create impact exposures.

2.8.10 Other OSHA required PPE shall be furnished as appropriate for specific tasks.

2.8.11 Other clothing:

2.8.11.1 Shirts shall not have noticeable holes and shall be free of profane, inflammatory, sexually explicit or discriminatory messages. Sleeve length shall cover the ball of the shoulder and shirt length shall reach waist of pants. Shirts shall not provide snag points.

2.8.11.2 Pants shall be full length. Holes must not be large enough to provide snag points or offer measurable amounts of exposed skin.

2.9 MEDICAL EQUIPMENT

2.9.1 Contractor shall purchase and maintain at least one (1) First Aid Kit on the Site as per the current version of ANSI Z308.1. Depending on the size, configuration of the Site, travel distance to retrieve, and time required to administer medical treatment, additional First Aid Kits may be required. The kit(s) should be readily available as needed.

2.9.2 Contractor shall purchase and maintain at least one Automatic External Defibrillator (AED) unit on the Site. The unit shall be located in Contractor Site office with appropriate signage and must be accessible whenever work is ongoing. Depending on the size, configuration of the Site, travel distance to retrieve, and time required to administer medical treatment, an additional AED unit may be required.

2.9.3 A minimum of two (2) Contractor employees, with current certifications for First Aid / CPR and for use of the AED, shall be at the Site whenever work is being performed.

2.10 WORKER TRAINING

2.10.1 **All workers shall be trained to perform their specific task(s). Formal documentation to support claimed training must be provided. Acceptable documentation for all certifications and training claimed shall contain the name of the training organization, name and title of the trainer(s), date of training, material covered with time spent on each topic, and evaluation process used to determine worker understanding of training. Documentation must be provided by the training organization. The database of employers' workers must be kept up to date and accessible for review as requested. No work or operations may commence without the PSC having completed review and acceptance under this Section. Owner reserves the right to determine acceptability of training being claimed.**

2.10.2 **For every brand and model of crane and motor driven equipment (earth moving, lift platforms, suspended stages, material handling, etc.) brought onto the Site, the using company shall transmit to the PSC a list of employees who are trained and authorized to operate that brand and model of equipment. Copies of training documentation in addition to any required certifications shall be provided. In addition, cranes shall be operated only by persons who possess certification from an organization that carries nationally recognized accreditation. Industrial Trucks (forklifts) shall only be operated by persons who have been certified by their employer. Individuals who possess required credentials shall demonstrate acceptable proficiency to the PSC or PSA.**

2.10.3 For every position that is required to assist with crane and motor driven equipment operations (flaggers, signal persons, riggers, spotters, etc.), the using company shall transmit to the PSC a list of employees who are trained and authorized to perform these functions.

2.11 PROJECT SAFETY SIGNS AND POSTERS

2.11.1 Contractor shall post a pair of safety regulation signs at every point of entry to the Site: one in English and one in Spanish. Font shall be black in color and sized in each language to completely fill the surface of a white-coated four-foot (4') vertical by eight foot (8') horizontal sheet of 3/4-inch plywood and shall contain only the following text:

ALL VISITORS, DELIVERY PERSONS, AND NEW WORKERS MUST REPORT TO THE PROJECT OFFICE <u>BEFORE</u> ENTERING ANY CONSTRUCTION AREA.

ALL PERSONS ENTERING ANY CONSTRUCTION AREA MUST WEAR STURDY WORK SHOES, PROPER CLOTHING, A HARD HAT AND SAFETY GLASSES AT ALL TIMES – NO EXCEPTIONS ARE ALLOWED DURING WORK HOURS.

POSSESSION OF WEAPONS, ALCOHOLIC BEVERAGES, CONTROLLED SUBSTANCES, OR DRUG PARAPHERNALIA WILL RESULT IN IMMEDIATE REMOVAL FROM THIS PROPERTY.

EXCEPT WHERE DESIGNATED (BY POSTED SIGNS AND AVAILABLE RECEPTACLES), USE OF ANY TOBACCO PRODUCT IS PROHIBITED ON THIS PROJECT.

THE MAXIMUM SPEED LIMIT FOR <u>ALL VEHICLES</u> ON THE PROJECT SITE IS NINE (9) MPH – LOWER SPEED MAY BE REQUIRED BY POSTED SIGNS IN SOME AREAS.

ONLY AUTHORIZED VEHICLES ARE ALLOWED ENTRY INTO CONSTRUCTION AREAS.

2.11.2 Contractor shall post a notice sign at the project office in English and Spanish. Font shall be black in color on a white coated board and size of letters shall be at least three inches (3") in height, and shall contain at least the following text:

VISITORS, DELIVERY PERSONS AND NEW WORKERS MUST CHECK-IN HERE FIRST.

COPIES OF SAFETY DATA SHEETS (SDS) FOR MATERIALS THAT WILL BE USED OR STORED ON SITE MUST BE DELIVERED BY ALL SUBCONTRACTORS TO THIS LOCATION AND SHALL BE AVAILABLE TO ANY REQUESTOR.

2.11.3 Contractor shall also post the following in locations that may easily be viewed by workers:

2.11.3.1 Color Codes for Quarterly Equipment Safety Inspections:

2.11.3.1.1 1st Quarter = White (January 01– March 31)
2.11.3.1.2 2nd Quarter = Green (April 01 – June 30)

2.11.3.1.3 3rd Quarter = Red (July 01– September 30)
2.11.3.1.4 4th Quarter = Orange (October 01 – December 31)

2.11.3.2 Emergency contacts list, including mobile phone numbers

2.11.3.3 Hazard Rating Guide (HMIS and/or NFPA)

2.11.3.4 Insurance Provider for Worker's Compensation Coverage for the Project

2.11.3.5 Others as required by Federal and/or State regulation

2.12 PROJECT SAFETY FILE DOCUMENTS

Contractor shall create and maintain files for Owner review. The following files shall be established in one location on the Site and shall be made accessible to Owner's agents during working hours. Additional files shall be created as directed by the ODR.

2.12.1 Project Safety Management Plan (PSMP)
2.12.2 Project Safety Management Plan Evaluations
2.12.3 Project Safety Orientation Checklists
2.12.4 Project Access Log
2.12.5 Project First Aid Log
2.12.6 Project Incident Notification, Investigation, and Evaluation Reports
2.12.7 All Qualified Person Certifications and Training Documentation
2.12.8 Project Competent Persons Lists
2.12.9 Project Equipment and Crane Operators Lists
2.12.10 Job Hazard/Safety Analysis (from each Subcontractor per operation)
2.12.11 Project Weekly Safety ("Tool Box") Meeting
2.12.12 Project Weekly Subcontractor Safety Representative (SSR) Meeting Minutes
2.12.13 Contractor Monthly Safety Report
2.12.14 Project Quarterly (Portable) Equipment Inspection Reports
2.12.15 Project Annual (Large) Equipment Inspection Reports
2.12.16 Project Permits (Closed Out)
2.12.17 Project Safety Infraction Records
2.12.18 Site Specific Safety Plan for Each Subcontractor on the Project
2.12.19 Drug / Alcohol Testing Confirmation Documentation
2.12.20 Subcontractor's Return to Work Policy and Acknowledgement
2.12.21 Contractor UTS Safety Specification 01 35 23 Requirements Acknowledgement

PART 3 – EXECUTION

3.1 POSITIONS, ROLES AND REQUIREMENTS FOR PROJECT SAFETY

3.1.1 Contractor's Project Superintendent and Project Manager

The Project Superintendent and Project Manager shall remain actively engaged and share responsibility for project safety throughout construction. Both shall support the PSC and PSA

when actions are required to maintain a safe work environment at the Site. Project safety shall never be compromised to achieve any other business objective.

The Project Manager shall ensure that ALL tiered subcontractors receive a copy of this Specification Section 01 35 23 prior to the execution of any subcontract and ALL required safety documentation is submitted for review and acceptance by the PSC prior to the subcontractorcommencing work on the Project.

3.1.2 Project Safety Coordinator (PSC)

3.1.2.1 The PSC shall report directly to a corporate safety officer of Contractor and shall not report through Contractor's Project Management team.

3.1.2.2 If removal of the PSC is initiated by Contractor, the existing PSC shall remain in position until a replacement candidate has been proposed to and accepted by Owner in writing and is specifically assigned to the Project. If the PSC leaves before the proposal and acceptance procedure is concluded, Contractor shall temporarily install either a Safety Director (Regional or Corporate) or a professional construction safety consultant as the PSC until a suitable replacement is accepted in writing by Owner. Any temporary replacement must meet the qualification levels, perform the duties, and be present full time on the Site as required of the PSC in order for work to proceed. A permanent replacement shall be accomplished within thirty (30) calendar days.

3.1.3 Project Safety Assistant (PSA)

3.1.3.1 The PSA shall report to and perform duties as directed by the PSC.

3.1.3.2 If removal of a PSA is initiated by Contractor, the existing PSA shall remain in position until a replacement candidate has been proposed and accepted by Owner in writing and is specifically assigned to the Project. If the PSA leaves before the proposal and acceptance procedure is concluded, Contractor shall temporarily install either a Safety Director (Regional or Corporate) or a professional construction safety consultant as the PSA until a suitable replacement is accepted in writing by the ODR. Any temporary replacement must meet the qualification levels, perform the duties, and be present full time on the Site as required of the PSA position. A permanent replacement shall be provided within thirty (30) calendar days.

3.1.4 Both PSC and PSA

3.1.4.1 The PSC and PSA shall have the authority to direct Contractor and Subcontractor personnel to correct any safety deficiency.

3.1.4.2 The PSC and PSA shall have the authority to stop any operation(s) that involve(s) any level of risk.

3.1.4.3 The PSC and PSA shall be fluent in English and have immediate access to the necessary resources to communicate verbally with all workers on the Site.

3.1.5 Subcontractor Safety Representative (SSR)

3.1.5.1 The SSR name, emergency contact information, and documentation of qualifications shall be submitted to and accepted by the PSC prior to the commencement of any work activities by the Subcontractor. Per this section, at least one SSR is required; however, the Subcontractor must plan for and make available as needed a qualified replacement should the primary SSR not be on Site. The SSR shall have the authority to direct actions, stop work and enforce discipline for safety issues.

3.1.5.2 The SSR shall submit a written task specific Job Hazard/Safety Analysis (JH/SA) daily and as work conditions change for each of the risk exposures associated with the Subcontractor's portion of the work. Documentation of attendees and subject material covered must be provided by the SSR. Each submittal shall be reviewed and accepted by the PSC or PSA prior to commencement of the work operation that will create the exposure.

3.1.5.3 The SSR shall attend the Project Weekly Subcontractor Safety Representatives Meeting when their company is actively performing work at the Site.

3.1.5.4 The SSR shall accompany any injured worker that requires medical attention at a facility outside the Site. The SSR shall be responsible for notification to the PSC of any incident including near misses, and shall complete all the documents required to manage any insurance claims. The SSR shall participate in incident investigations that involve the Subcontractor's portion of the work.

3.1.5 5 Each SSR may be required to accompany the PSC or PSA during portions of each safety inspection that involves the Subcontractor's scope of work.

3.1.5.6 The SSR shall ensure that planning, training, equipment and materials are provided so that workers can perform their duties safely.

3.1.6 Work Crew Supervisor, Equipment Operator, Competent Person, Qualified Person, Medical Responder

3.1.6.1 Supervisors, Equipment Operators, Competent Persons, and Medical Responders for each of the positions held, shall be recognized by the employer through formal submittal to the PSC. Documentation of training with applicable certification shall be maintained in the Project safety file.

3.1.6.2 Designations of certifications and qualifications for special roles shall be clearly displayed on the back of the worker's photo identification badge.

3.2 PROJECT SAFETY MANAGEMENT PLAN (PSMP)

3.2.1 Safety Mission and Policy Statement. Contractor's Safety Mission Statement shall include a commitment to create and maintain a work environment that will eliminate or minimize all risk exposures for all workers at the Site. The Safety Policy Statement shall include acknowledgement that Contractor is accountable for providing and controlling a safe environment for all workers and members of the public. An original signature and date to endorse

and assure commitment by a Corporate Executive or Business Owner shall be affixed to this element of the PSMP. The PLAN shall include the following as a minimum:

3.2.2 Safety Roles and Responsibilities. This element shall outline and describe roles, responsibilities, and authority of each member of the Project staff for involvement in Site safety, security, incident command, and incident claims management. Contractor's Project organization chart shall indicate the reporting line for the PSC and PSA(s) as applicable. The PSC or PSAs shall not be responsible for activities associated with insurance enrollment and maintenance or any other duties not directly related to Project safety. Administration (clerical) duties related to safety can be transferred to another member of the Project staff. Overall intent is to maximize time in the field by the PSC and PSAs.

3.2.3 Safety Enforcement. This element shall include Contractor's disciplinary procedure for its own employees and for those of all Subcontractors. It shall include a description of the levels of severity and frequency (repetition) that will result in Contractor intervention and provide details of the retraining and/or disciplinary steps that will ensue from the possible combinations of unsafe behaviors. It shall also include discipline for supervisors who tolerate risk.

3.2.4 Safety Recognition and Commendation. This element shall include a description of how those workers who demonstrate exemplary safety behavior and those supervisors who manage, enforce, educate and promote safety will be recognized and commended. Any celebration that will occur as part of this element shall not be minimized with achievement of Project milestones that are associated with production, schedule, quality or budget. Owner supports the use of a Safety Commendation Program (SCP) as long as it is part of a more comprehensive safety program. Any commendation program must encourage worker participation, reinforce safety training, promote safe behavior and practices, and support continuous improvement of the safety process on the Project. No SCP shall be implemented that would discourage reporting of injuries, illnesses, property damage or unsafe working conditions. The SCP shall be prudent, economical, simple, and with a greater focus on daily positive feedback and commending safe work behavior than providing expensive or extravagant commendations. The SCP plan shall be submitted for Owner review and approval prior to implementation, and must include details regarding quantity and cost of suggested commendations. *Note: *If utilization of vendor donated items for commendations are anticipated, those items will be evaluated to confirm that they are reasonable and appropriate.*

3.2.5 Safety Hazards. This element shall include a narrative that recognizes existing Site conditions, foreseeable changes to existing conditions, local climate, Owner and public interface, environmental impact and remediation issues, skill and experience levels of available work force, utility interruptions, water supply sources, power supply sources, Owner facility provisions, sanitation requirements, parking, material storage areas, and proximity to students and public walkways and roadways. It shall contain a completed copy of the Anticipated Project Hazards Checklist (EXHIBIT A). It shall also be expanded throughout the duration of Work to include Subcontractor plans for elimination or minimization of risk. All portions of this element shall be consistent with existing procedures for the campus Environmental Safety and Health department, the campus Security department, and local municipal Fire and Rescue.

3.2.5.1 Hazard Communication ("HazCom"). Insert the elements required by OSHA. The PSC shall maintain a Hazardous Materials Inventory List with individual SDS for each and every hazardous substance brought onto the Site. In addition to the product label of contents, all

containers with at least five (5) gallons of fluid capacity or twenty (20) pounds of chemical content shall include either HMIS or NFPA hazards warning labels (except drinking water and fire extinguishers). All products with HMIS/NFPA number ratings greater than zero, or one in any of the three categories (health, flammability, or reactivity), shall be considered as hazardous.

3.2.5.2 Environmental (Sensory) Hazards. Insert actions to measure worker exposures and to control hazards that may exist beyond OSHA permissible exposure limits (i.e. dust, fumes, noise, chemicals, respirable silica, and extreme temperatures). Also, include control and remediation plans for incidents that result in a spill or discharge of a potentially hazardous or toxic substance (liquid or gas). If lasers will be used, include plan to control worker exposure.

3.2.5.3 Roadway and Traffic Hazards. Insert actions to be taken at times when public roadways or sidewalks are affected by construction activities. Signs, devices, and procedures shall be identified where public passage is to be closed or altered. Procedures and training for flaggers shall be required and shall comply with all applicable Texas Department of Transportation (TxDOT) regulations for road safety; specifically, the Texas Manual on Uniform Traffic Control Devices (TMUTCD) shall be referenced.

3.2.6 Fire Prevention and Control

3.2.6.1 Insert arrangements and equipment necessary to provide adequate protection during all phases of construction. All portions of this element shall be developed to be consistent with Owner's existing procedures.

3.2.6.2 Burning, Welding, Flame Operations. Insert the process for issuance of a "Hot Work" permit (EXHIBIT B). Daily permit forms shall be issued by the PSC or PSA, even if the campus Environmental Health and Safety department desires to be involved and issues a campus permit. The permit form shall be completed by the SSR and returned to the PSC or PSA for field verification of noted conditions and written acceptance prior to start of operation. All permits shall expire at the end of the shift. Permits shall identify the fire watcher(s) and require pre-operation and post operation inspections.

3.2.7 Emergency Response. Describe each type and level of emergency that may reasonably be expected to occur on the Project. Insert response or rescue plan for each kind of potential emergency. This element shall address first aid, off-site medical care, property damage, rescue, project alarm signals, wind, flood, lightning strikes, and evacuation, threat of violence, protests or deliberately disruptive events. NOTE: Owner shall designate a spokesperson who shall be the only person authorized to communicate with the media. This element shall include a drawing or sketch of the Site (maintained for "as built" conditions) to indicate gates, emergency vehicle roadways, lay down areas, crane set up positions, exterior hoists, etc. All portions of this element shall be developed to be in accord and cooperation with Owner's existing procedures.

3.2.7.1 Incident Notification. Insert the list of personnel with mobile phone, email, position and company information who may be contacted. The ODR and others as directed shall be included in the incident notification process. Depending on potential severity of the incident, notification may be in written and/or verbal form as directed. Incident notification flow shall be as indicated in EXHIBIT K. Indicate specific positions within the campus staff that may be contacted and/or involved in the notification and control process; i.e. Site control and

utility management. Only the spokesperson designated by Owner shall have the authority to release live or pre-recorded video or written statements to the media. Contractor shall cooperate with the Owner's designated spokesperson and coordinate media arrangements as directed.

3.2.7.2 Site Security. Insert actions and control measures to prevent intrusion during work and non-work hours. Describe intended controls for perimeter security, gate security, pedestrian crosswalks, protection at public paths through and alongside construction areas, warning signage, etc. Identify special work that may not be performed during regular hours, and will require special precautions. Include descriptive detail for some method of gathering names and probable locations of workers who have not been cleared for safe departure during any type of emergency. Identify the position(s) of all who will possess this information and be prepared to convey critical details quickly to any outside emergency response command that might arrive at the Site.

3.2.8 **Project Trenching, Tunneling and Excavation. Insert soil boring reports, soil classification analysis, Site sketch and any other information that may support, explain or clarify the intent of this element. In addition to requirements in the UTUGCs, this element must be stamped and sealed by a Registered Professional Engineer recognized in the State of Texas in the field of Civil or Soils Engineering.**

3.2.9 Drug and Alcohol Impairment. Contractor, for itself and all Subcontractors, shall have a robust drug and alcohol screening and intervention plan. Insert details of Contractor policy for screening both direct employees and Subcontractor employees for the presence of controlled substances, prescription pharmaceuticals, and alcohol. Describe all of the types of testing and confirmation that Contractor requires and the tolerance thresholds for each substance. This element shall include, as a minimum, a detailed explanation of the following situations and mandatory testing events:

3.2.9.1 **Pre-project entry – Test results conducted within two weeks preceding issuance of badge for access to the Project Site. Proof of testing must be documented by company letter with representative name and title, date of testing, location of testing, indicates that testing meets or exceeds the NIDA 5 panel for drugs and DOT for alcohol, name of each tested worker, and results. Results must be negative. Other drug/alcohol testing may be required while working on the Project. ANY positive test result requires removal of the worker from the Project. Any worker that has been off the Project for more than sixty (60) consecutive days must also be retested within the two weeks requirement prior to re-entry.**

3.2.9.2 Post-incident

3.2.9.3 Random selection

3.2.9.4 Suspicion

3.2.10 Concrete (for slip-form, crane bucket, pump truck, cast-in-place)

3.2.11 Confined Space Entry (Permit Required and Restricted Entry)

3.2.12 Crane Operations (for set-up/use requirements and limitations)

3.2.13 Demolition (Mechanical and/or Explosive Blasting)

3.2.14 Electrical Power Service (address power supply and use during construction)

3.2.15 Fall Prevention and Protection (from elevations and at same level)

3.2.16 Hand and Power Tools

3.2.17 High Voltage ("Proximity Work")

3.2.18 Ladders and Stairs

3.2.19 Lock-out, Tag-out (Energy Isolation for sudden release of any kind of energy)

3.2.20 Respiratory Protection

3.2.21 Safety Inspection

3.3 PROJECT SAFETY MEETINGS AND TRAINING

3.3.1 Project Initial (Safety Kick-Off) Meeting

3.3.1.1 At any time within, but no later than, fifteen (15) calendar days after the issuance of the Notice to Proceed with Construction, Contractor shall arrange suitable accommodations and Owner will designate a representative to schedule and chair the meeting. Minimum attendance shall include Owner's project manager, Facilities Project Inspector(s), OSR, Contractor's project manager, Superintendent, PSC and PSA, and Contractor's Corporate Safety Representative. Additional representatives for Owner, the A/E, Contractor and local regulatory entities may also attend.

3.3.1.2 Contractor shall confirm the schedule availability for all non-Owner attendees at least fourteen (14) calendar days prior to the meeting date.

3.3.2 Initial Meeting with Subcontractors for acknowledgment of Safety Requirements

3.3.2.1 At any time after the date of intent to award each first-tier subcontract, but prior to commencement of any Work, Contractor shall arrange and chair a documented meeting with Subcontractor to explain safety requirements. Minimum attendance shall include Owner's Facilities Project Inspector(s), Contractor's PM, Superintendent, PSC, PSA, and SSR. Other interested parties for Owner and Contractor may also attend. Any lower-tier subcontractors that have been awarded part of the work shall also attend. A copy of Exhibit N to this specification is to be signed by representatives from each Subcontractor and submitted to Owner.

3.3.2.2 In addition to all of the pertinent safety regulations that apply to the portion of the work that the Subcontractor will perform, Contractor shall clearly state the expectation that safety

management of its workers and sub-tier workers shall be the Subcontractor's responsibility and that failure to adequately manage safety could result in a demand for the removal and replacement of supervisors.

3.3.3 Project Safety Orientation Training – All Dedicated Project Workers

3.3.3.1 The PSC or PSA shall conduct formal training to every dedicated project worker who is to be allowed into the Construction Area(s) without an escort. This duty shall not be delegated. Unless the PSC and/or PSA are bi-lingual, a translator shall be present when there are workers in attendance who do not speak English. Workers and their immediate supervisors shall be required to attend a repetition of the orientation whenever observed behavior indicates a lack of understanding or repeated non-compliance of project safety requirements.

3.3.3.2 The PSC shall review the Safety Orientation Checklist (EXHIBIT D) and incorporate each applicable topic within the presentation**.** The PSC shall develop and administer a process to ensure and demonstrate worker understanding.

3.3.3.3 The PSC shall furnish a project-specific, photo-identification badge to each dedicated project worker who satisfactorily completes the Project Safety Orientation. The badge will indicate the worker's name, employer, job title, project name, and Owner project number. The badge must be visible at all times that the worker is on the Project and be located above the waist using clip or arm band. Lanyards are prohibited. Failure to maintain the badge will be grounds for removal from the Site. Operator qualifications for specific equipment that can be operated will be identified on the back of the worker's photo identification badge. ID badges shall not be issued to visitors.

3.3.3.4 The PSC shall confirm employer insurance requirements have been met and that all required documentation is on Site and has been reviewed and found acceptable prior to start of orientation. PSC shall confirm documented credentials for operators and SSR prior to start of orientation. The PSC shall maintain a Site access log to document each successful orientation and any reorientations. The log shall include Project critical information (name, employer, badge number and position).

3.3.4 Daily Job Hazard / Safety Analysis (JH/SA) Training

3.3.4.1 Prior to start of the work for each shift, the SSR shall conduct a meeting with all members of the work crew to explain how the work steps for the shift are to be accomplished. Explanation shall include a discussion of all the work activities that will be performed in the vicinity as well as the work that the crew is expected to accomplish. Explanation shall address all of the recognized risks associated with the task and the hazard controls to be installed or actions to be taken to eliminate or minimize the exposures. Actions to be taken in the event of an emergency shall also be included and documented.

3.3.4.2 **A daily JH/SA shall be produced to document this meeting. (Exhibit M –Mandatory)** It shall contain names and initials of all attendees, name of supervisor (SSR if same), a project specific daily statement of task(s), and any special safety measures or actions that are required to assure elimination or minimization of risk. A copy of the JH/SA shall be reviewed in the field comparing planned and actual work and endorsed by the PSC or PSA prior to work

activities and copies of any completed permits shall be clipped to the document. The supervisor's and workers' signatures on the JH/SA shall be understood to also mean a thorough communication of all anticipated hazards and controls has been provided to all workers. A copy of the JH/SA will be posted in the immediate work area (considered to be within 75 feet) until the daily activities are complete. The JH/SA shall be modified as work activities change, warranting additional review and communications to the affected workers throughout the shift. Modified JH/SA must be re-reviewed and endorsed by the PSC or PSA prior to work re-start.

3.3.4.3 Project team members (Owner, Contractor and Subcontractor) are expected to attend these JH/SA meetings as frequently as possible to reinforce the Project safety culture.

3.3.5 Project Weekly Subcontractor Safety Representatives Meeting

3.3.5.1 The PSC shall chair a weekly meeting with all SSR(s) to ensure that all are aware of the existing hazards and exposures that should be addressed with each crew. A written agenda (EXHIBIT E), attendance roster, and meeting minutes shall be prepared and maintained at the Site by the PSC.

3.3.5.2 This meeting shall be exclusively reserved for safety and hazard control issues. Attendance shall be required of all SSR(s) when their employer is actively conducting work operations on the Site. Project team members (Owner, Contractor and Subcontractor) are expected to attend these weekly meetings as frequently as possible to reinforce the Project safety culture.

3.3.6 Project Weekly Site Safety ("Tool Box Talk") Meeting

3.3.6.1 All workers on the Site, including site Project team members (Owner, Contractor and Subcontractor), shall attend a weekly safety Tool Box Talk, which shall be presented in English and all other languages that are natively spoken at the Site. The PSC or PSA may deliver each talk to the entire Site population or each SSR may deliver individual meetings to their specific trade and/or group. The PSC or PSA shall periodically participate and review individual meetings to ensure effectiveness. The PSC or PSA shall collect and maintain copies of all sign-in sheets for every meeting.

3.3.6.2 Meetings shall address appropriate topics for the current and future work operations and current Site conditions. In addition, the PSC or PSA shall communicate information regarding statewide safety results discussed during Monthly PSC Conference Calls, inspection results, and other project safety-related topics.

3.3.7 Periodic PSMP Review and Lessons Learned

Contractor shall work with Owner to use Lessons Learned to capture significant safety experiences and best practices over the course of the Work. Contractor will work with Owner to facilitate Lessons Learned at Substantial Completion and will work with Subcontractors to actively participate in Lessons Learned. Contractor shall develop and distribute any reports that detail findings to Owner as requested. The PSC shall formally evaluate and update the project safety process and supporting documentation as construction activities dictate, or at least semi-annually

to ensure effectiveness and continuous improvement. Modifications after each review shall be submitted to Owner for review and acceptance.

3.4 SAFETY INSPECTIONS

3.4.1 Daily SafetyNet Inspections

3.4.1.1 Project safety inspections shall be entered into SafetyNet. The OSR(s), Owner, PSC and PSA, shall all be recognized users of Owner's SafetyNet Program. Other persons such as Contractor's project management team and the SSRs are expected to participate in daily project inspections. Information entry into SafetyNet conducted by these individuals shall be through the PSC or PSA.

3.4.1.2 User participation shall include recording of all observations and conditions at the Site (via the program's menu-driven checklist). Additionally, the PSC shall review on-line reports and respond appropriately, detailing sustainable action(s) taken to correct the identified safety process deficiencies.

3.4.1.3 Each deficient safety observation shall be corrected or controlled immediately. The PSC shall be responsible for reviewing and ensuring proper closure of all unresolved ("open issues") observations. Owner shall concur prior to closure.

3.4.1.4 An OSR will conduct initial training for the PSC understanding and use of the SafetyNet Program. All subsequent training of PSA(s) shall be accomplished by the PSC.

3.4.1.5 At a minimum, a daily SafetyNet inspection shall be conducted by each PSC and PSA on Site during the shift. The daily inspection may only record a group of observations within a single work operation, but the accumulated inspections conducted by the PSC and PSA throughout each work week shall reflect a comprehensive report of all operations at the Site. Each inspection shall be entered into SafetyNet within twenty-four (24) hours of the inspection. All inspections for the current month must be entered into SafetyNet no later than the last day of that month.

3.4.1.6 When an OSR conducts an inspection, the PSC and/or PSA shall be available to join in during the walk around. Other Owner users will also require the PSC and/or PSA to participate in the inspections.

3.4.1.7 When the PSC or PSA conducts an inspection, at least one SSR shall join in for the portion of the inspection that addresses the Subcontractor's scope of Work.

3.4.2 Quarterly (documented) Inspection of Tools, Rigging, and Portable Equipment

3.4.2.1 In addition to the required daily equipment inspection by the user, the PSC shall facilitate a documented safety inspection each quarter. Contractor and each subcontractor of any tier shall produce and submit a document (EXHIBIT F) that addresses all tools, rigging, and portable equipment within the company's inventory on the Site. Documentation evidencing inspections shall be maintained by the PSC.

3.4.2.2 This inspection shall include, but not be limited to, the following: Fall Arrest / Restraint Equipment, Rigging, Manufactured Ladders, Job Built Ladders, Power Tools, Electrical Cords, Welding Leads, Hoses, First Aid Kits, AEDs, Atmosphere Monitoring Meters, and

Ground Fault Circuit Interrupter devices. Personally-owned hand tools are exempt from this inspection procedure, but daily examinations of all portable items prior to start of work shift as prescribed by the equipment manufacturer and/or OSHA standards are not relaxed.

3.4.2.3 For every item that "passes" the quarterly inspection, the SSR must remove the previous quarter's color coding and affix the current quarter's color coding. The PSC shall establish a universal system for the placement of the color coding for each individual piece of equipment identified in Section 3.4.2.2 (i.e., male end of an extension cord, spreader bar on portable step ladder, etc.) Every item removed from service shall be repaired, replaced, destroyed or immediately removed from the Site. The inspection report shall reflect such actions. Inspection reports shall be completed by the SSR and submitted to the PSC prior to use of any new equipment on the Site and re-inspections before the first calendar day of the beginning of each quarter of the year. Quarterly re-inspections may begin and color coding may be changed anytime during the final one-week period of the previous quarter.

3.4.3 Initial and Annual Inspection of all Cranes and Motor Driven Equipment

3.4.3.1 The PSC shall ensure manufacturer required safety inspections and written certifications for all hoists, cranes, mobile equipment, motorized scissors and aerial lift platforms, motorized stage platforms, generators, and compressors are maintained on the Site.

3.4.3.2 The PSC shall ensure that all equipment inspections are consistent with the manufacturer's requirements. An initial inspection and certification of proper condition shall be transmitted to PSC before a piece of equipment is allowed to commence operations on the Site.

3.4.3.3 The PSC shall ensure all equipment is inspected annually and certified as required prior to initial use. Any equipment that leaves the Site and returns will require re-certification before it shall be allowed to resume operation at the Site.

3.4.4 Inspections by Regulatory Agencies

The PSC or PSA shall notify Owner immediately of the arrival at the Site by a representative of a Regulatory Agency (OSHA Compliance Officer, TCEQ Representative, Law Enforcement Officer, etc.), and provide the ODR with a copy of any published findings or citations issued to any employer, and shall ensure that statutory posting requirements are met. PSC shall provide Owner with a copy of any employer's response to the same findings or citations.

3.5 CONTRACTOR RECORDS, INVESTIGATIONS AND REPORTS

3.5.1 Mobile Equipment and Crane Operator Records

Consistent with the requirements of Section 2.10.2, each subcontractor of any tier shall submit to the PSC, for each operator, a record of training. The minimum amount of detail as applicable for the specific piece of equipment shall include the following:

3.5.1.1 Pre-start up inspection, travel path issues, and location/set up procedure;

3.5.1.2 Start up, operation, intended use, and shut down (normal and emergency);

3.5.1.3 Equipment Operations Manual, Limit Chart(s), Motor Plate information, equipment capacities and limitations, alarm features, safety stops, seat belts, roll over protection and preventive maintenance;

3.5.1.4 Any additional operational topics as indicated by the equipment manufacturer.

3.5.2 Contractor Monthly Safety Report

3.5.2.1 The PSC shall enter the following information directly into SafetyNet; total man hours by month, all OSHA recordable and days away from work incidents including descriptions and relevant fields, near misses, first aid rendered, and property and equipment damage. Data shall be entered into SafetyNet no later than the 10th of the month following the reporting period.

3.5.2.2 This information is vital to Owner's safety benchmarking efforts. Failure to submit the information in a timely manner may result in Owner withholding payment, or some portion thereof, and shall disqualify Contractor from consideration for safety recognition for the month of failure to submit as required.

3.5.3 Incident Notification, Investigation and Reporting Procedure

3.5.3.1 During the orientation, the PSC shall instruct all workers to immediately report every incident to their supervisor, even if there is no obvious injury or property damage. Supervisors shall immediately notify the PSC or PSA, who shall immediately notify the Owner of any incident. All Near Miss incidents, First Aid injuries, High Risk Safety Inspection Observations, and other such incidents as directed by Owner shall be entered into SafetyNet by the PSC. All incidents shall be investigated. The PSC shall lead the efforts and follow a structured incident investigation program. Contractor and involved subcontractors of each tier shall tailor the magnitude and depth of the investigation effort to correspond to the potential, rather than the actual outcome of the incident. Investigation team members shall include safety personnel, project management, line management, affected workers, and consultants as the circumstances dictate. Owner reserves the right to participate in any incident investigation. The PSC shall develop a Root Cause(s) Analysis report (Exhibit J) that summarizes the incident, identifies the underlying contributing factor(s), determines which process element(s) failed to control the incident, determines which process element(s) will be implemented or improved, and the time needed to take sustainable corrective action(s). PSC shall conduct and submit incident investigation report that supports the Root Cause(s) Analysis in the manner and time as directed by the ODR. Owner reserves the right to determine the acceptability of the findings. The PSC shall prepare and submit reports that will allow Owner and subcontractors of each tier to understand findings and any planned changes to the PSMP based on those findings.

3.5.3.2 Incident Responsibilities for Workers and Supervisors

3.5.3.2.1 The PSC or PSA shall cover the information in the Worker Responsibilities (EXHIBIT G) document during the orientation and keep copies to hand out to any worker who appears to have sustained an occupational injury.

3.5.3.2.2 The PSC or PSA shall cover the information in the Supervisor Responsibilities (EXHIBIT H) document during the orientation and keep copies to hand out to any supervisor who informs PSC or PSA that a worker injury has occurred.

3.5.4 Contractor Final Safety Report

3.5.4.1 The PSC shall work with all contributing subcontractors of each tier to prepare a Final Safety Report and shall forward to Owner no later than thirty (30) calendar days after Substantial Completion.

3.5.4.2 Report shall include at least the following items:

3.5.4.2.1 Summary of the PSMP with description of improvement initiatives undertaken during the course of the Project

3.5.4.2.2 Evaluation of the effectiveness of the PSMP, including summary results of assessments performed

3.5.4.2.3 Project safety performance results (leading and trailing indicator measures)

3.5.4.2.4 Project safety lessons learned and best practices

3.5.4.2.5 Summary of Project incidents

3.5.4.2.6 Evaluation of Contractor and all Subcontractors overall safety performance

3.5.5 Contractor shall provide additional reports as requested by Owner. This may include work force histograms, training documents, safety trending reports, etc.

3.5.6 The PSC shall notify Owner when a worker is removed from the project for a serious infraction, including any of the following reasons: refusal to take a post incident drug/alcohol screen or a positive result if taken, possession of a prohibited weapon on the Site or Owner's premises, criminal activity, use of equipment that jeopardizes the safety of any worker or visitor, or fighting on the Site or Owner's premises. Within forty-eight (48) hours of removal, the PSC shall provide Owner a brief report of finding(s) that resulted in the worker removal. Report must include the project name and location, the name of the removed worker, the legal name of the worker's employer, the date and time of the incident leading to the removal, and a brief summary of the facts justifying the removal.

3.6 CONSTRUCTION OPERATIONS

The following requirements are either in addition to or in the absence of federal and state regulations. Where conflicts exist, the most stringent directives shall apply.

3.6.1 Cranes

3.6.1.1 Tower cranes (including affiliated transformers and power supply equipment) shall be surrounded by at least a sixteen-foot (16') high, 5/8-inch plywood enclosure with a lock-controlled entrance.

3.6.1.2 Operators of cranes shall be trained in the specific make and model of crane and possess certification from a nationally accredited certifying organization.

3.6.1.3 Every crane and piece of hoisting equipment shall be equipped with an anti-two blocking sensor above each lifting block.

3.6.1.4 Unless the crane is equipped with sensors that inform the operator of the weight of the load on the hook and the current wind speed, these measurements shall be determined by other means before commencement of each lift.

3.6.1.5 When outriggers are used on cranes, they shall be fully extended. Float pads shall be landed onto leveled and properly designed and sized slabs or cribbing. Where steel plate is used for cribbing, welded or bolted cleats shall be attached to upper surface to prevent float pads from moving horizontally.

3.6.1.6 For cranes of up to and including 35-ton capacities, wooden cribbing shall be a minimum of four inches (4") in thickness. For cranes over 35-ton capacities and up to 150-ton capacities, cribbing shall be a minimum of eight inches (8") in thickness. For all cranes up to 150-ton capacity, the minimum size of the surface ("footprint") of the cribbing assembly shall be determined by the following formula: the capacity of the crane (in tons) divided by 5 equals the minimum square footage required. Properly sized circular crib pads are acceptable. Side dimensions for rectangular crib pads shall be equal to each other or differ by no more than one foot. For cranes larger than 150-ton capacities, a qualified person shall design the cribbing. "Sandwich" units of cribbing are allowed as long as the plywood on bottom and on top is at least one inch in thickness.

3.6.1.7 For "Pick and Move" operations, the pick shall be made directly in front of the crane with the boom as near vertical as possible. Move at walking speed with a "spotter" in front of the load and another behind the crane. Guy wire cables that secure the load to the body (to prevent lateral force loading of the boom) of the crane shall be required if the grade slope is more than three (3) degrees or the terrain is uneven. Only rubber-tired cranes shall be allowed to perform this operation without a "critical lift" plan and the load must be under fifty percent (50%) of the "on rubber" chart limit.

3.6.1.8 Critical Lifts shall include, but not be limited to: (1) Tandem Lifts, (2) Lifts greater than seventy-five (75%) percent of Load Chart, (3) Crane Suspended Personnel Hoists, (4) Non-Conventional Outrigger placements and (5) "Blind" picks and/or placements. All of these events shall require submittal of custom designed plans by qualified persons. The PSC is responsible for review and acceptance prior to planned lifts.

3.6.1.9 **Multiple lift operations ("Christmas Treeing") shall not be permitted.**

3.6.1.10 **All crane operators on rigs rated for more than five (5) tons of capacity shall submit to a physical examination prior to conducting any work on the Project and, if still on the**

Project, at least every twelve (12) months thereafter. The physician's written declaration of fitness shall be submitted to and maintained by the PSC in the Project files.

3.6.1.11 Only the designated rigger and/or signal persons shall issue lift instructions to the operator. The only exception shall be an emergency stop signal, which may be delivered by anyone on the Project who knows how to alert the operator.

3.6.1.12 All loads lifted more than six feet (6') above ground elevation shall have a tag line attached that is long enough to allow control of load spin without placing any part of the body directly below the load. When "shake out" hooks are used, the load must never be elevated above five feet (5') over the surrounding surface and workers must stay at least five feet (5') horizontally away from the suspended load.

3.6.1.13 For any load that may be elevated and the travel path may impact any worker, a means for worker notification must be in place. The crane operator may perform this notification by horn if the load can be seen at all times. If the crane operator may lose sight of the load at any time, notification must be made by a designated individual who can maintain sight of the load. Notification must be accomplished by some means that attracts the attention of all workers and ensures that the workers are not directly below the load being moved.

3.6.1.14 **Any erection or dismantle of a tower crane will only be done while activities are monitored by a crane consultant provided by Owner. Prior to any operation, the tower crane erection/dismantle contractor shall provide a detailed plan for the work. Details of the plan must include at a minimum, all elements in Exhibit L, and the plan must be provided to Owner as required. Owner reserves the right to determine acceptability of the information provided. Submission of this plan in no way relieves Contractor from ensuring all documentation is provided, reviewed for accuracy based on the planned task(s), ensuring that the work is pre-planned and communicated to all affected workers, all workers are properly trained to perform their tasks, and that all work is done according to the agreed to plan. The PSC is responsible for the review and acceptance for Contractor.**

3.6.2 Demolition

3.6.2.1 Maintain clearly marked and well-illuminated egress paths at all times.

3.6.2.2 Maintain barricades and signage that isolates impacted areas to prevent entry by other trades and members of the public.

3.6.2.3 Removal of materials and trash from elevated locations must be controlled. Materials, scraps or waste shall never be allowed to free-fall from a height greater than ten feet (10'). Items that may be caught by wind and carried horizontally shall never be allowed to drop freely from any distance. If items are allowed to be dropped freely (unless as indicated previously), a person shall be stationed at the landing elevation at a safe distance to warn others away from the operation, and the landing area shall be surrounded by fence type barricade placed at least six feet (6') outside of the expected landing area. Wall openings that may be located vertically between the material drop point and the expected landing area shall be securely covered and marked from inside. Anything that is to move downward at a distance greater

than ten feet (10') or is capable of sailing horizontally shall be contained within a chute or controlled by hoist.

3.6.2.4 Unless the Contract documents clearly call for it, the use of explosives for demolition is prohibited.

3.6.3 Electrical Power

3.6.3.1 Ground Fault Circuit Interruption (GFCI) shall be the primary protection from exposure to electrical current for all workers on the Site. Only exit lighting and medium-high (greater than 240) voltage service will not be GFCI protected.

3.6.3.2 All strings of temporary lights shall be fully lamped and guarded regardless of height, and shall be continuously maintained. PSC shall ensure that illumination levels are periodically monitored and adequate for the expected work activities in those areas.

3.6.3.3 All receptacles and switches shall have trim plates installed before they are energized.

3.6.3.4 All power distribution panels shall have full covers installed before primary power is brought into the panel. When energized panels are located in open areas, covers shall be locked except when an authorized electrician is working in the immediate area. When panels are located inside separate rooms or closets, automatic closers and automatically locking hardware shall be installed on doors as soon as equipment is energized, and only authorized persons shall be provided a key. Doors shall not be modified to stay open. Warning signs shall be placed in conspicuous locations. Energized electrical rooms shall not be used for material storage or continuous personal occupancy. Locked electrical room or panel doors will not be considered to meet the requirements of a Lock Out / Tag Out program. The Lock Out / Tag Out program in use must ensure that any affected worker has the ability to confirm equipment being worked on has been de-energized, made safe, and has individual control of the locking device and tag used to control inadvertent startup of the equipment.

3.6.3.5 Contractor shall implement and document an overall safety program that directs activities appropriate for the electrical hazards, voltage, energy level, and circuit conditions anticipated.

3.6.3.6 Extension cords used must be a minimum of 12 gauge.

3.6.4 Excavations

3.6.4.1 **Any and all trenching operations that are four (4) feet or more in depth or could result in any worker's upper body being positioned below grade level shall adhere to the requirements of the UTUGCs.** In addition to UTUGC requirements, every excavation shall require a preliminary meeting with representatives as designated by Owner to determine historical knowledge of existing utilities. Where applicable, a phone call for utility "locates" shall be completed seventy-two (72) hours in advance. "Potholing" and/or hand digging shall be required within three (3) horizontal feet of "located" centerlines, and in areas where knowledge is lacking.

3.6.4.2 The "toe" of spoil piles that are less than four feet (4') in height shall be at least two feet (2') from the edge of any excavation. Spoil piles greater than four feet (4') in height shall add one foot (1') of distance from the excavation for every additional foot in height. Spoils shall be managed to prevent airborne dust.

3.6.4.3 Trench and/or excavations are to be backfilled at the end of each shift as practicable.

3.6.4.3.1 When a trench or excavation cannot be backfilled in the same day that it is created, a highly visible fence type barricade shall be erected at a minimum distance of six feet (6') from all approachable edges. All portable means of access shall be removed at the end of each workday.

3.6.4.3.2 Earth ramps that are to be used for walking access shall not exceed twenty percent (20%) in grade slope. Steeper slopes shall be gate controlled for equipment only, and alternate access shall be added for pedestrian traffic.

3.6.5 Fall protection and prevention

3.6.5.1 **Any walking/working surface that is equal to or greater than six feet (6') above the surrounding area shall present an unacceptable fall exposure unless it has all edges (side and ends) protected by an attached guardrail system, fall arrest equipment, fall restraint equipment, fall capture netting, or is blocked off by an adjacent wall. An adjacent wall shall be continuous, structurally sound, and at least thirty-nine (39) vertical inches above the walking/working surface, and within eight (8) horizontal inches from the open edge.**

3.6.5.2 Contractor or a subcontractor at any tier that will create a fall exposure equal to or greater than six feet (6') shall submit a detailed plan and set of drawings in advance of the operation to indicate how the exposure shall be addressed. Contractor shall require the plan to contain either "engineered" or conventional fall protection measures for each and every exposure that involves vertical distances equal to or greater than six feet (6'). Any precautionary measure that would allow greater risk than that afforded by a guardrail system, fall restraint equipment, fall arrest equipment, or fall capture netting shall be prohibited. **The use of a "Monitor" is expressly prohibited.** The recognized exemptions/exceptions are as follows:

3.6.5.2.1 Allow work from portable step ladders as long as a "three point" contact is maintained, the ladder is properly positioned, secured from movement, the worker's center of gravity remains between the rails and in front of the feet, and the worker's waist does not extend above the top of the ladder. The height of the worker's feet is limited to twelve feet (12') above the supporting work surface for this exemption/exception.

3.6.5.2.2 Allow work from an extension or straight ladder if the ladder is properly positioned, secured from movement, "three point" contact is maintained, the worker's center of gravity remains between the rails and in front of the feet, and the worker's waist does not extend above the top of the ladder. The height of the worker's feet is limited to twelve feet (12') above the supporting work surface for this exemption/exception.

3.6.5.2.3 **The use of a warning line system is prohibited unless all other means of fall protection have been demonstrated to be infeasible. If infeasibility is demonstrated to the satisfaction of the PSC and Owner, work may be performed without fall arrest measures while standing on an elevated walking/working surface only if maintaining a distance of at least fifteen (15) horizontal feet from the edge. The unprotected edge shall be clearly identified by posted signage and a warning line erected continuously at a fifteen-foot (15') setback distance.**

3.6.5.2.4 When work is to be performed from a ladder placed near a guardrail system and the ladder can fall toward the leading edge, the safe distance from an unprotected edge shall increase one foot (1') horizontally for each vertical foot that a worker climbs above the surrounding surface. This requirement shall also apply to a ladder that is being placed beside a protected edge. Any leading edge ("controlled access") zone work shall require fall protection arrangements prior to entry.

3.6.5.3 Covers placed over pier holes, and roof or floor openings shall be physically secured and clearly marked with warning message "HOLE COVER - DO NOT REMOVE." Any cover that is too small for legible wording shall be bright orange or red.

3.6.5.4 Job built ramps and bridges shall be surfaced with an abrasive (non-skid) material. Ramps shall comply with ADA slope requirements.

3.6.5.5 Equipment and work operations of any description shall not be permitted to be performed directly above a worker unless adequate overhead protection is provided prior to commencement of the operation.

3.6.5.6 Each subcontractor of any tier that utilizes fall protection equipment in the course of its work shall provide for prompt rescue of a worker in the event of a fall or shall ensure that a worker is able to self–rescue. Specific plans for rescue of workers shall be developed prior to initiating work requiring the use of a personal fall arrest system. The fall protection plan, along with details for self-rescue as needed, shall be submitted to the PSC for review prior to work start.

3.6.6 Fire Protection

3.6.6.1 All floors that have combustible materials present shall be accessible from ground level by a usable stair system (temporary or permanent). For structures greater than three (3) stories in height, fire sprinkler standpipes shall be completed and charged to within two (2) stories, or thirty (30) vertical feet of all floors containing combustible materials. Siamese connection shall be installed at every level to provide access for fire hoses. All fire extinguishers that are not task-specific shall be adequate in number and description to comply with OSHA declared limits for egress points, floor area and travel distances. In multistory buildings, at least one fire extinguisher rated no less than 2A shall be located adjacent to each stairway on each floor. They shall be situated in highly visible locations mounted at a height to facilitate ease of inspection and retrieval for use. All fire extinguishers shall be inspected monthly.

Inspections tags shall be attached to each extinguisher and initialed by the inspector after each inspection.

3.6.6.2 All fire extinguishers that are task specific shall be inspected and furnished in advance by the employer that will be conducting the work requiring such firefighting provisions. All work that includes burning, welding, or spark producing of any type shall be defined as "hot work" and shall require the presence of a fire extinguisher, at least one fire watch, and a Hot Work Permit. Fire extinguisher(s) used for "Hot Work" shall be placed within sight of but no more than twenty-five feet (25') from the perimeter of the task operation and must be of proper size and type for the activity, fully charged, and inspected prior to use. Extinguisher location must be kept clear and accessible at all times during use. Fire extinguishers in use for general project protection shall not be used for this purpose. Refer to WELDING AND BURNING for additional details.

3.6.6.3 No more than twenty-five (25) gallons per floor, of flammable or combustible liquids shall be stored in a room outside of an approved storage cabinet.

3.6.6.4 Only UL approved metal fuel containers with flame arrestor and self-closing spout shall be allowed on Site.

3.6.6.5 Any liquid storage container larger than twenty - five (25) gallons shall be provided with its own secondary containment. Containment must be properly sized and maintained for effectiveness.

3.6.7 Housekeeping

The PSC or PSA shall ensure that Contractor and all Subcontractors "effectively" clean the Site continuously throughout each workday. "Effective clean-up" shall daily address all of the following housekeeping issues:

3.6.7.1 All construction waste, trash, and debris shall be placed in designated receptacles. Glass bottles shall not be permitted on the Site.

3.6.7.2 Stack (or restack) all whole and scrap materials in locations that shall not obstruct a clear pathway nor create a risk for toppling onto a person passing through the area.

3.6.7.3 Place all hoses, cords, cables and wires in locations that prevent them from being damaged by equipment, sharp edges or pinch points and from creating tripping hazards.

3.6.7.4 Secure and effectively cover all materials on roofs or elevated levels that may be displaced by wind or damaged by driving rain or standing water.

3.6.7.5 Restore all signs, barricades, fire extinguishers, guardrails, gates, etc. to proper locations and sound condition.

3.6.7.6 Properly store and secure all flammable and combustible liquids and gases.

3.6.7.7 Collect and place all cut-off or waste pieces of rolling stock, as they are created, into waste or scrap containers.

3.6.7.8 Live rounds that have been ejected from powder-actuated tools shall be immediately placed in designated containers and properly disposed of as recommended by the manufacturer.

3.6.7.9 All puncture and impalement exposures shall be covered or eliminated as soon as they are created. As per ANSI specification, effective covers shall be designed to prevent impalement of a 250-pound body being dropped from a fall of four feet (4').

3.6.7.10 All aisles, exits, and other parts of the means of egress shall be properly maintained and free of stored material and/or waste at all times.

3.6.8 Ladders

3.6.8.1 **Until such time that two (2) usable stairways are in place, every elevated platform (slab, deck or work surface) shall have at least two (2) remote (considered to be on opposite ends of the work level) ladders for access/egress when the platform is populated by more than three (3) persons. As the population rises above twenty-five (25), additional means of independent access/egress shall be required. A double-cleated ladder may only serve as one (1) independent means of access/egress.**

3.6.8.2 **At the end of each workday, ground access to elevated levels shall be eliminated. This shall be accomplished by removal and storage of all portable and job-built ladders, or installation of a lockable shield that prevents use of the lower rungs.**

3.6.8.3 Portable aluminum ladders shall be prohibited.

3.6.8.4 Extension ladders, straight ladders and job-built ladders shall be secured from movement at the top and the bottom.

3.6.8.5 Physical barricade offset that forces at least one change in walking path direction shall be constructed within a six-foot (6') radius around the upper access points for any ladder's step off landing area. If space does not allow this required offset barricade, another type of physical barricade must be provided at the ladder's step off landing area.

3.6.8.6 All elevated landings shall include a rope hoist (manual or motorized) near the ladder's upper-most access point.

3.6.8.7 Minimum acceptable manufactured step or extension ladder that can be used is an ANSI heavy-duty rating Type IA. All ladders must be inspected daily for condition and set up. All manufacturer installed labels must be maintained in legible condition on all ladders. All ladders must be marked in such a way as to identify the owner.

3.6.9 Medical Assistance and Screening

3.6.9.1 The PSC shall maintain a First Aid Log for all treatment administered on the Project (including any that might later escalate). Each SSR shall report and record details daily.

3.6.9.2 The PSC or PSA and SSR shall transport or accompany any injured worker for initial off-site medical treatment.

3.6.9.3 Drug and Alcohol Screening shall be mandatory for every supervisor and/or worker who sustains or contributes to any incident that involves property damage, worker injury or as directed by Owner. If impairment or poor judgment appears to be involved in a first aid event, PSC shall direct injured employee to be screened for probable cause.

3.6.9.4 **Minimum requirements for drug screening shall at least match the threshold limits for the NIDA 5-panel protocol and alcohol screening shall at least match the Texas DOT vehicle operator's limit for blood alcohol content. Only negative results are acceptable for employment on the Project. Evidence that testing was performed as required shall be by a letter provided by the employer that includes: name of employer and representative, date of testing, name of testing organization, testing criteria that meets or exceeds the above noted levels, name of each worker tested, and results (positive or negative as appropriate).**

3.6.9.5 Screening shall be initiated as soon as possible, but not later than two (2) hours after the incident occurrence. No matter where the worker receives medical treatment, a post incident drug and alcohol test MUST occur at the Project assigned clinic. Any worker's refusal to submit to screening shall be treated in the same manner as a "positive" finding. Any worker who withholds notification of an incident for longer than one (1) hour after the alleged event shall be evaluated by the PSC or PSA, and if declared to be negligent shall be permanently removed from the Project.

3.6.10 Motorized Equipment Operation

3.6.10.1 Where possible, equipment operator cabs shall be locked during non-working hours. Only equipment operators and direct supervisors shall have access to keys.

3.6.10.2 No combustion engine equipment shall be operated in enclosed spaces unless the exhaust is piped to outside air, and "fresh" air is brought into the space to replace the amount being consumed. The PSC shall be responsible for monitoring air quality on the Project when combustible engine equipment is used. This includes generators, welding machines, and compressors as well as mobile equipment.

3.6.10.3 For hose and termination fittings on air compressors, "whip checks" shall be used at all connection points. Emergency automatic shut off valves shall be installed on every discharge fitting of all air compressors that are capable of producing air pressure greater than thirty (30) pounds per square inch.

3.6.10.4 Any equipment that operates by rotating such that a worker can possibly be exposed to a caught between hazard must have the swing radius barricaded to prevent worker entry.

3.6.10.5 Only company vehicles with evidenced company provided insurance are allowed in the Construction Area while on the project. Parking is only allowed in Contractor's designated parking area(s).

3.6.10.6 Accessories for all mobile equipment (blades, buckets, forks, etc.) shall be placed in the down position, ignition off, parking brake engaged, and keys removed when the equipment is parked and the operator is no longer on the equipment.

3.6.10.7 If a forklift, crane, or other such mobile lift and carry equipment is being used in an area where the public may be present or in a congested project area where the operator's view may be obstructed, flaggers/spotters will be required as determined by the PSC or PSA.

3.6.11 Public Protection

3.6.11.1 The project boundary perimeter shall be secured from public intrusion by fencing and locked gates.

3.6.11.2 "Attractive nuisance" items such as tower cranes, tall ladders, fire escapes, large excavations, etc. shall require additional and separate security measures.

3.6.11.3 No visitor or member of the public shall enter a Construction Area without an authorized escort.

3.6.11.4 All visitors to the Site must abide by all applicable project safety requirements. Visitors must read and sign the Visitor's General Waiver and Release (Exhibit C) prior to entry to the Construction Area(s).

3.6.11.5 Contractor shall be authorized to contact campus police to remove anyone who refuses to abide by Contractor directive to leave the Construction Area. Owner shall be notified immediately should this occur.

3.6.12 Sanitary Facilities

3.6.12.1 Contractor shall provide at least one (1) toilet facility per twelve (12) workers (separate count per gender) at the Site; and shall pump, clean and re-supply at least once per week to maintain sanitary conditions. When average temperatures during daylight hours exceed 85 degrees, pump outs shall occur at least twice per week. When female workers are present at the Site, toilets designed and designated for their exclusive use shall be clearly marked. Toilets located in project management office trailers and used by office support staff shall not be considered to meet this requirement unless by written consent of Owner.

3.6.12.2 On all projects that are four (4) stories in height or greater, sanitary facilities shall be furnished on ground level and every third level (maximum 45 vertical feet).

3.6.12.3 Contractor shall provide and maintain hand washing and sanitizing facilities sufficient in numbers and locations as to support the toilet facilities indicated in Section 3.6.12.1 and 3.6.12.2.

3.6.12.4 The use of any Owner toilet facility is strictly prohibited unless by written consent of Owner.

3.6.13 Scaffolding

3.6.13.1 Each ground-supported scaffold shall bear a shift inspection tag (initialed and dated by the competent person for each subcontractor of any tier that requires use of the scaffold) to indicate the status of the scaffold (green tag means completely safe and red tag means specific precautions required, or not safe/do not use). For suspended scaffold, inspection tags shall also be placed on the outriggers as well as the work platform. The PSC shall purchase and control a universal system to be used by all subcontractors at the Site. Training with supporting documentation shall be required for all workers on the Project who will climb onto any kind of scaffolding. The PSC shall furnish tags, and ensure that all applicable workers understand the procedure. This requirement shall apply to all scaffolds.

3.6.13.2 Mudsills and surrounding areas at the base of ground-supported scaffolds shall be maintained in a well-dressed and level condition. Scaffold foot plates (or casters) shall be installed on the legs of all ground level frame sections and shall be visible for inspection at all times. Diagonal braces shall be included in every scaffold section as is practically possible. Every walking/working level shall be fully planked and kick-off protection shall be included along open sides and ends. Overhead protection shall be constructed where walk-though passages are allowed. Mudsills shall be at least 2”x12” in one-foot lengths with foot place centered and nailed in two corners.

3.6.13.3 Brakes on rolling scaffolds shall be secure at all times, except when the scaffold is being moved. Workers shall not be allowed on the platform when a scaffold is being moved. Rolling scaffolds should be used on solid, unobstructed, and flat floor surfaces only.

3.6.13.4 **Workers in any type of aerial lift including man lift or scissor lift shall be provided with a means to be secured (restraint or maximum 6 ft. SRL) to the lift so that movement is limited to the floor of an elevated lift. No worker shall be allowed to stand on the toe board or rail of the lift. No lift shall be modified to allow the operator to stand above the floor. No worker shall be allowed to exit an elevated lift.**

3.6.13.5 Stilts shall be inspected daily by the equipment user and maintained properly. Surfaces on which stilts will be used must be dry, flat, and free of pits, holes and obstructions such as debris, as well as other slip, trip and fall hazards. When a worker is using stilts in an area where a guardrail system is used for fall protection, the guardrail system must be increased in height by an amount equal to or greater than the height of the stilts being used. **A rigid platform at a height equal to or greater than the height of the stilts shall be used for mounting/dismounting stilts. The platform must be wide and deep enough to sit comfortably, be stable, and be secured from movement while in use. The platform must be kept clear, accessible, and within the immediate work area (considered to be within 75 ft.) while stilts are in use. Stepladders or makeshift platforms cannot be used for this requirement.**

3.6.14 Stairs

3.6.14.1 Properly designed and built stair and landing units shall be placed at access doors for every Project office and storage trailer prior to use. Per ANSI requirements, the landing outside each door of any office trailer shall be no greater than one quarter inch (1/4”) below the threshold and the unobstructed (standing) area outside the swing radius shall be no less than twenty-two inches (22”). Fire and Life Safety Code (NFPA) and ADA requirements shall

also be satisfied as they apply. Ramps or connecting decks may be installed to satisfy this requirement.

3.6.14.2 For incomplete permanent stair sections, at least the bottom four (4) risers and upper entry points for each floor shall be physically blocked with a hard barricade and marked "INCOMPLETE – DO NOT USE." Until a complete section is made acceptable for general use, the barricades and signs for that section shall be maintained. Once permanent stairs are put into service for general use, no less than two (2) stairs must be maintained as open and accessible from the uppermost floor to ground level at all times. To be considered usable, all treads and landings must be filled to the top of the pan and handrails must be in place. If any previously available stair(s) will be blocked during the workday, all impacted workers must be notified and the alternate means of access/egress communicated prior to that day's work start.

3.6.15 Project Service Water

3.6.15.1 Potable Water: Potable water shall comply with city and community health requirements.

3.6.15.2 Non-potable Water: Water storage containers, hose bibs and faucets shall be posted in English and Spanish "DANGER – DO NOT DRINK or WASH."

3.6.16 Welding and Burning

3.6.16.1 Splices, taps, welds and/or burning operations that may produce sparks, slag or hot scraps shall require "Hot-Work" or "Burn" Permits (daily or per shift). "Burn Permit" shall be issued by the PSC. The SSR shall submit completed permit in advance of the work to the PSC for acceptance. One copy of the accepted permit shall be posted by the SSR in the immediate area of the operation. At the conclusion of the work and successful completion of the smolder/re-kindle watch, a copy of the expended permit shall be signed off and returned to and filed by the PSC. If Owner wishes to be involved in the process (provision of permit and/or pre-inspection of the permit space), Contractor shall accommodate these wishes. The PSC will also issue work-specific permits daily or per shift. The PSC shall ensure that all Hot Work will be provided with at least a fire watcher(s), fire extinguisher(s), and proper spark, slag, or hot scrap containment measures. If the work produces intense light, permit shall also contain requirement for screens to protect others from flash burns.

3.6.16.2 Oxygen and fuel gas cylinders shall not be stored together, including on bottle carts, but shall be separated by at least twenty (20) feet and properly secured from movement. At the end of any cutting operation and/or any shift, bottles must be removed from carts. Hoses and gauges shall be removed and caps restored onto cylinders.

3.6.16.3 Anti-flashback arrestors shall be installed at the pressure regulator gauges of all Oxy-Acetylene cutting rigs, even if the torch is equipped with a built-in arrestor.

3.6.16.4 Fire watcher(s) shall be posted at every operation that produces sparks, flames or sufficient heat to create an ignition or to fall onto another level. If multiple activities are no more than twenty (20) feet apart and all activities can be seen at all times, a single fire watch can be utilized. This allowance must be noted on the Hot Work permit. All fire watchers shall be

trained in the use of extinguishers, shall keep other people from entering exposure areas, and shall not be assigned other duties until the rekindling possibility ("smolder/re-kindle watch") is over. When sparks, slag, or fire cannot be controlled at the source and may fall to a different level, a separate fire watch shall monitor each level directly below the work (including exterior locations).

3.6.16.5 Heater boxes for welding electrodes shall have a manufacturer's label that certifies the purpose of the unit. Job-built heaters shall be prohibited.

3.6.16.6 The unused stubs of welding electrodes ("rod butts") shall be collected and placed in proper disposal containers (i.e. metal bucket with sand or water) as soon as each one is expended. Whenever operation is idle, electrode shall be removed from stinger.

3.6.16.7 Welding operations shall not be allowed to present an opportunity for flash burn exposures to the eyes of any workers in the vicinity. All welding operations shall provide appropriate screening measures, erected in advance to contain the high energy light.

3.7 REQUEST FOR SAFETY VARIANCE

If the Project conditions present a situation that will not allow compliance with any portion of this Section, Contractor shall submit a Request for Safety Variance (EXHIBIT I) to Owner. The Request for Safety Variance must provide sufficient detail(s) regarding the action(s) to be taken that will provide a measure of safety that is equal to or exceeds the stated requirement. Until the variance is approved and signed by the ODR, compliance with this Section is required.

LIST OF EXHIBITS:

- EXHIBIT A Anticipated Construction Project Hazards – Checklist submittal
- EXHIBIT B Hot Work Burning/Welding Permit – Project file document
- EXHIBIT C Visitor's General Waiver and Release – Contractor submittal
- EXHIBIT D Project Safety Orientation Checklist – Project file document
- EXHIBIT E Subcontractor Safety Representatives Weekly Meeting Agenda - Template
- EXHIBIT F Quarterly Equipment Inspection Report – Project file document
- EXHIBIT G Worker Guide for Reporting Injury - Handout
- EXHIBIT H Supervisor Guide for Management of Worker Injury - Handout
- EXHIBIT I Request for Safety Variance – Contractor submittal
- EXHIBIT J Root Cause Analysis
- EXHIBIT K Incident Notification Flow Chart
- EXHIBIT L Tower Crane Assembly/Disassembly Documentation
- EXHIBIT M Job Hazard Analysis Form (Mandatory)
- EXHIBIT N Safety Specification 01 35 23 Contractor Acknowledgement Statement

END OF SECTION 01 35 23

[BALANCE OF PAGE INTENTIONALL LEFT BLANK. EXHIBITS BEGIN ON FOLLOWING PAGE.]

EXHIBIT A	CONTRACTOR SUBMITTAL TO OWNER – CHECKLIST

The University of Texas System – Construction Project Safety

ANTICIPATED CONSTRUCTION PROJECT HAZARDS

CIP (Owner's Project) #	Project Name	Date

No	Yes	Issue	Timing for appearances & ID for Subcontractor JH/SA's
		General Health Exposures	
		Noise, Illumination, Lasers and X-ray	
		Dusts, Mists, Vapors, Gases	
		Chemical exposures	
		Proximity to public and/or traffic	
		Existing geography/ extreme weather	
		Electrical Exposures	
		Overhead power lines in area	
		High Voltage (∃ 600 volts)	
		Hot taps and/or Double fed circuits	
		Excavations	
		Tunnels and/or Jack and Bore	
		Maximum estimated trench depth	
		Maximum estimated pier sizes	
		Existing underground services	
		Proximity to streets or buildings	
		Elevated Fall Exposures	
		Excavations and piers	
		Structural erection (steel/precast)	
		Building exterior	

		Stairwell/ Chase/Elevator Shaft	
		Roof (note steep or low slope)	

Cranes/ Hoists/ Derricks			
		Pier Drilling/ Pile Driving	
		Exterior Hoists (Elevators)	
		Mobile Cranes (track and rubber tire)	
		Tower Cranes	
		Critical lifts	
Tools and Equipment			
		Powder Actuated	
		Pneumatics or High Torque power tools	
		Generators and Compressors	
Motor-Driven Equipment			
		Earth moving equipment	
		Lift Platforms (articulating and/or scissor)	
		Industrial trucks (fork lifts)	
		Bulk fuel storage area	
Demolition			
		Structural, Explosive or Mechanical	
		Jackhammers and power cutting	
Scaffolding			
		Ground supported (static and/or motorized)	
		Suspended	
Welding and Burning			
		Types and Locations	
Confined Space			

		Permit required and/or not required	

EXHIBIT B **CONTRACTOR DECISION MATRIX – GUIDELINE**

The University of Texas System – Construction Project Safety

HOT WORK (BURNING/WELDING) PERMIT
(ONE COPY MUST BE POSTED IN THE VICINITY OF THE WORK)

CIP Number		Request Date:
UT Campus / Institution		
Project Name		
Requesting Company		
Responsible Supervisor		
Work Location		
General Description of Work Tasks		

ISSUES AND/OR PREVENTION MEASURES	**DESCRIPTION**
Dedicated Fire Extinguisher(s)	
Special Suppression Equipment	
Fire Blankets/Equipment Shielding	
Flash Burn (Eye Safety) Screening	
Fire Watch Position(s)	
Existing Sprinklers Disabled	
OTHER CONSIDERATIONS:	

NOTES:

1. All permits are good for one (1) shift only.
2. Unless a specific task requires a **LONGER** time period, fire watch positions must also conduct a smolder-rekindle watch for at least THIRTY (30) MINUTES after the burning/welding operation is completed.
3. If the work moves from one area to another during a single shift, the permit must accompany the move and all task areas must be identified on the permit.
4. After the work is completed, the permit must be initialed by the RESPONSIBLE SUPERVISOR (below) and a copy must then be forwarded to the Prime (Controlling) Contractor within one (1) work day.

If unexpected events during the work led to modified plan, place initials in appropriate box: ☐ **NO** ☐ **YES** If **YES**, describe the unexpected events and the subsequent actions.

EXHIBIT C	CONTRACTOR PROCEDURE – GUIDELINE

Visitor's General Waiver and Release
The University of Texas System (Owner)

Project Name: _____

Project Number: _____ Location: _____

General Contractor:_____

OFPC Resident Construction Manager: _____

Project Safety Coordinator_____

On behalf of The University of Texas (Owner) and the General Contractor, we welcome you to the project. Construction projects can be dangerous and hazardous to employees and visitors alike. Upon entering the Site, you must exercise extra care to adhere to safety protocols and instructions from knowledgeable construction professionals.

Initials _____ I acknowledge that I will observe and follow all safety procedures, including any warning signs or safety instructions posted on or about the premises. In addition, I acknowledge that proper safety vests, hard hats and safety glasses have been provided to me for my visit. I am wearing closed toed shoes that the Project Safety Coordinator has acknowledged will be appropriate for my visitation.

Initials _____ I hereby waive, release and hold harmless, as well as forever discharge, The University of Texas System, the General Contractor and all subcontractors, their agents and employees from all claims which I, or my heirs, executors or administrators shall or may have, because of bodily injury or death to me or damage to my property resulting from any act or omission of the Released Parties. I AM NOT AGREEING, HOWEVER, TO RELEASE THE RELEASED PARTIES FROM GROSS NEGLIGENCE.

Initials: _____ I hereby agree to indemnify, defend and hold harmless the Released Parties for any bodily injury, death or damage to other persons or property caused by my acts or omissions while visiting the project.

Initials: _____ I, the undersigned, acknowledge that I (1) have requested permission from Owner and General Contractor to visit the Site; 2) have executed this Waiver and Release as a condition of and in consideration for being permitted by Owner and General Contractor to visit the Site; and 3) agree to exercise extreme care while on the Site and to comply with all safety rules and requirements of Owner and General Contractor.

Date: _____ Visitor Signature:_____

Number in Visiting Party: _____ Group Affiliation: _____

Project Safety Coordinator Signature: _____

EXHIBIT D	CONTRACTOR CHECKLIST – TRAINING DOCUMENT

The University of Texas System – Construction Project Safety

PROJECT SAFETY ORIENTATION	
OFPC Project #:	Date of Safety Orientation Training:
OFPC Project Name:	
Trainer's Name:	
Contractor/Employer's Company Name:	

INSTRUCTIONS: *Place a* ☑ *mark in the box to the right of each topic as it is discussed.*

1-	Review General Purpose of Rules			7-	Daily Issues		
	a.	Do NOT work alone – stay in contact			a	Housekeeping	
2-	Personal Protective Equipment (PPE)			ITEM		Slippery surfaces and Trip hazards	
	Purpose, use, storage and care of:			ITEM		Visual obstructions to emergency equipment	
	a	Safety Helmets (Hard Hats)		ITEM		Blocked Exit paths	
	b	Basic Eye Protection		ITEM		Emergency Roadways	
	c	Additional Eye/Face Protection		ITEM		Trash = Vermin/Fire hazards	
	d	Feet/Hands/Clothing Protection		ITEM		Puncture/Impalement hazards	
	e	Respiratory Protection		ITEM		Unstable Stacks of materials	
	f	Hearing Protection			b	Manual Lifting	
	g	Fall Protection			c	Ladders and Stairs	
	h	Special Protection issues			d	Scaffolding (frame and suspended)	
3-	Hazard Communication (aka Right to Know)				e	Tools and Portable equipment	
	a	General Plan			f	GFCI/Electrical power	
	b	Major Chemical hazards on-site:			g	Surface and ground conditions	
NAME					h	Overhead exposures	
NAME				8-	Motorized Equipment Operations		
NAME					a	Mobile equipment (uses and alarms)	

NAME							
	c	Hazard Labels			b	Crane and Rigging Operations	
	d	Safety Data Sheet (SDS)			c	Lift platform equipment	
	e	Location of SDS			d	Hoists/ Exterior Elevators	
	f	Safe Task Training requirements			e	Company/ Personal Vehicles	
4-	Emergency Equipment (location and use)			9-	Special Operations (with and w/out permit)		
	a	First Aid Station and AED			a	Excavations	
	b	Fire Extinguisher			b	Concrete pour and place	
	c	Eye Wash/Shower Stations			c	Steel and Precast erection	
5-	Emergency Procedures				d	Decking and roofing	
	a	Medical/ Injury incident			e	Lock/Tag out of Energized Systems	
	b	Fire incident			f	Hot work and Burn Permits	
	c	Weather/ Evacuate			g	Scaffold erection/dismantle and use	
	d	Violence, Protest, Spill, Explosion			h	Critical shutdown	
6-	Incident Notification/Reporting			10-	Miscellaneous Issues		
	a	Tell Supervisor Immediately			a	Parking, Smoking, Harassment	
	b	Help –OR- stay out of the way			b	Signs, Barricades, Handrails	
	c	Give a statement of facts			c	Traffic, Pedestrians, Neighbors	
	d	Assist investigation			d	Drugs and Alcohol	
	e	Report Unsafe acts and conditions			e	Meetings, Badges, Incentives	
					f	Enforcement	

I understand that this training is designed to help me make safe decisions and act to reduce risks.

Employee Name (print) _____ Employee Signature _____

EXHIBIT E	CONTRACTOR TEMPLATE – FILE DOCUMENT

The University of Texas System – Construction Project Safety

SAFETY REPRESENTATIVES WEEKLY MEETING AGENDA

- Sign in and introduction of any new Subcontractor Safety Representatives
- Read minutes from last meeting and vote final adjustments before filing into record

Past (Old Business):

1. Discuss investigations (findings and conclusions) from recent past incidents.

2. If the Project has a safety committee, have someone from the committee report the safety conditions and behaviors noted in the past week.

3. Review safety issues/conditions identified during Project Safety Coordinator's weekly safety inspection or third-party inspection.

4. Discuss any pending claims (worker injury or general liability). Review claims handling procedures.

5. Discuss trends identified regarding claims or safety performance.

Present (Current and New Business):

6. Review the activities for the week ahead. Identify particular safety concerns and issues. Develop actions to control identified hazards.

7. Review any SDS for potential exposure warnings that pertain to upcoming operations.

8. Review specific PSMP elements and/or requirements.

9. Safety suggestions.

10. Open forum for general Q and A.

11. Announcements

- Subcontracts that are concluding – need final look at their areas
- Upcoming safety recognition events
- Upcoming training opportunities
- Upcoming professional safety seminars or workshops
- Names of workers who are not permitted to return to Project
- Time and date of next meeting
- Next week's mandatory topic for the Weekly Tool Box talk

EXHIBIT F **SUBCONTRACTOR SUBMITTAL – FILE DOCUMENT**

The University of Texas System – Construction Project Safety

QUARTERLY EQUIPMENT INSPECTION REPORT

Quarterly Color Codes:	**(1st) White**	**(2nd) Green**	**(3rd) Red**	**(4th) Orange**
Project Number		**Date of Report**		
Project Name				
Contractor				
Employer Name				
Inspector's Name				

INSTRUCTIONS:
1. Use one line to identify each type of portable equipment on Project.
2. Use a "check" mark to indicate pertinent categories for each line item.
3. Use an "N/A" mark to indicate non-applicable categories for each line item.
4. Use "Qty." column to indicate total number for each item inspected.
5. Use "Comments" area to describe items removed for repair and/or discarded.
6. Complete this process within final fourteen (14) calendar days of each quarter.
7. Items that enter or return to Project during quarter must first be re-inspected.

Portable Equipment Items	**Qty.**	**Inspection Categories**							
		Insulation intact and cords undamaged	Clean, no electrical shorts, good polarity	Labels in place and legible	All parts present and undamaged	No excessive wear or corrosion	No deformity or sign of excessive strain	Safety feature(s) intact and working	Warning alarms operating properly

Comments:									

I certify that all of the portable items on this Project at the beginning of this quarter have been inspected and certified or removed from service.

Signature of Inspector

Date of Report

Distribution: Employer's Project file ☐ Contractor's Project file ☐

EXHIBIT G **CONTRACTOR INFORMATION – WORKER HANDOUT**

The University of Texas System – Construction Project Safety

WORKER GUIDE FOR REPORTING INJURY

- **WORKERS MUST IMMEDIATELY REPORT** all injuries (no matter how minor) to a supervisor.
- The supervisor will report the incident to Contractor and take care of all paperwork.
- The worker's SSR will drive the injured employee to the clinic to guarantee safe transport and to secure swift and complete medical attention.
- The doctor may prescribe written "orders" for medical restrictions. The supervisor must then assign temporary duties that fit the restrictions ("Light Duty"). This guarantees the worker a full paycheck while the injury heals.

- The worker's SSR will drive the injured worker back to the Project and make arrangements with the employer to get the worker and personal vehicle home by a safe method.

- Injured employees must follow the doctor's "orders" and comply with work restrictions – **at home and at work**. Employers must allow reasonable times for visits to the doctor and to therapy sessions. Normally, sessions can be scheduled during non-work hours.

- The insurance company may contact the injured employee to discover how the doctor and the employer are planning to treat the injury and the recovery. Injured workers should share any personal details that might help the agent understand the situation. If anything needs to be changed in order to help the recovery process, the agent will contact the proper people to make it happen.

- The insurance company will pay the medical bills for injuries on this Project. Workers should never pay any medical bills for an injury that is related to work. If there are any questions, talk to a supervisor and/or the Project Safety Coordinator for Contractor.

SPECIAL WARNING TO USERS AND ABUSERS (of alcohol and other controlled substances):
No matter where a worker receives medical care, the treatment will include a drug and alcohol test. Workers who are injured as a result of impairment from alcohol or non-prescribed drugs will lose the guarantee that all medical treatment will be covered by insurance. Also, they will not be allowed to return to work on any UT System Project.

EXHIBIT H CONTRACTOR INFORMATION – SUPERVISOR HANDOUT

The University of Texas System – Construction Project Safety

SUPERVISOR GUIDE FOR MANAGEMENT OF WORKER INJURY

1. Workers must **IMMEDIATELY REPORT** all injuries (no matter how minor they appear at the time of the incident) to a supervisor (foreman, general foreman, superintendent, etc.).

2. The supervisor must **IMMEDIATELY REPORT** any injury to Contractor's Project Superintendent or Safety Coordinator. Improper and/or late reporting of injuries will result in Owner directed recovery charges as described in the Contract.

3. The supervisor must then escort the injured employee to Contractor's Project office (**except when the injury requires an ambulance or emergency response**).

4. Contractor's Project Safety Coordinator (PSC) shall retrieve 5 documents from the Project Safety Files as follows:
   a. The form (Authorization for Medical Treatment) that guarantees quickest medical response at the clinic b. A map that shows the best route to the clinic
   c. A copy of the Return to Work Policy from the employer of the injured worker
   d. A "First Report of Injury" form to furnish the insurance company with the necessary information to start a claim and pay medical bills

e. A "Bona Fide Offer of Employment" form to guarantee suitable employment for medically restricted workers

5. The worker's SSR will drive the injured employee to the clinic to guarantee safe transport and present the "Authorization to Treat" form to obtain swift response. This form will also notify the clinic that a test for drugs and alcohol is required. If the injured worker is transported elsewhere, Contractor shall also notify the insurer. The supervisor shall also be at the clinic to respond to questions from the physician.

6. After the doctor has completed the examination and all required medical care, the worker's SSR and the worker shall meet with the doctor to accomplish three objectives:
   a. Review the injury and discover the need for any additional medical assistance.
   b. Discuss suitable Return to Work positions to accommodate any medical restrictions.
   c. Present the worker with a "Bona Fide Offer of Employment" form to guarantee continuing employment and to guarantee work tasks that will not exceed prescribed medical restrictions.

7. The worker's SSR shall then drive the worker back to the Project and shall make suitable arrangements to get the worker and personal vehicle home at the end of the day. If the doctor has written a prescription that contains orders for medical restrictions, the worker must be assigned to ("Light Duty") tasks that meet the restrictions. This presents a "win-win" for all involved as follows:
   a. The injured worker will continue to draw his/her full paycheck.
   b. The employer will be able to keep its insurance rating as competitive as possible.
   c. The insurance provider will be able to keep the costs of medical claims as low as possible.

8. The SSR must promote three issues to quickly and completely restore health:
   a. Maintain awareness of medical restrictions, and assign work tasks that do not violate the restrictions.
   b. When contacted by the insurance agent, be candid and share any information that may expedite the physical recovery of the injured worker.
   c. Allow reasonable times for physical therapy (or other medical treatment) and maintain contact with worker.

9. **Zurich** is the insurance company that will pay the medical bills. Contractor's Project Safety Coordinator will have the contact information to file the required insurance claim.

SPECIAL NOTE: No matter where the worker receives medical treatment, a drug and alcohol test MUST occur at the Project assigned clinic. Employers must not allow workers with confirmed drug or alcohol impairment to return to employment on any UT System Project unless the drug is prescribed by a physician and the work assignment can be safely performed.

EXHIBIT I **CONTRACTOR SUBMITTAL TO OWNER - TEMPLATE**

The University of Texas System – Construction Project Safety

REQUEST FOR VARIANCE

Date of Request:

From: *(insert name of Contractor and name of person signing on behalf of company)*

To: Office of Facilities Planning and Construction – *(insert name of OFPC RCM)*

Project Name: _____

Project Number: _____

We respectfully request a variance from the Contract, Section # 01 35 23 (Project Safety Requirements). We understand that no alteration of safety procedures is to be allowed until formal acceptance is executed by OFPC.

We believe that the following regulation(s) is/are either not practicable or not the best practice for the Project at this time.

(Insert verbiage that describes the specified regulation.)
(Insert description of how and why the existing conditions make the existing regulation less than the safest method for accomplishing the work – convenience is not an acceptable reason.)
(Insert the proposed method in sufficient detail to allow a reader to visualize the better plan.)

Very truly yours,

_____ _____
Signature *Position*

On behalf of the Board of Regents of The University of Texas System, Contractor's request is:

ACCEPTED ☐ DENIED ☐

_____ _____
Printed name *Signature*
Request reviewed by OFPC Regional Program Manager

_____ _____
Printed Name *Signature*
Request reviewed by OFPC Resident Construction Manager

*Note: This variance as reviewed is understood to be for this scope of work and this project only. It is further understood that this variance is not portable as it relates to any other OFPC Project.
Cc: OFPC Safety Analyst - Austin

EXHIBIT J	ROOT CAUSE ANALYSIS FORM

Root Cause Analysis OFPC Project Name_____

Name of Incident_____

OFPC Project Number _____

Date of Incident _____

Employee Injury? ☐ No ☐Yes If yes, list employee name_____

Date of RCA _____ If revising, date of revision_____Revision No._____

Contractor _____ Subcontractor (if applicable)_____

This RCA is due to:

☐ Injury, ☐ Level "A" Safety Deficiency, ☐ Property Damage, ☐ Other Incidents as directed by Owner

Identify all underlying contributing factors to reduce potential for recurrence of same type incident. Remember:

- ✓ Worker's actions made sense to that person at the time (circumstances & perceptions)
- ✓ Understand the thought process behind the decisions that were made at the time
- ✓ Look beyond the individuals involved to uncover systemic contributing risk factors ☐ Break the blame cycle (culture must value honest reporting - learning organization) ☐ Find error precursors & flawed or missing defenses or processes that led to incident

The Root Cause Analysis investigation should thoroughly address these questions:

1. Was the incident controlled and limited so that all workers and the project were made safe post - incident? What was done?
2. Explain what happened (facts and circumstances) that resulted in the incident.
3. Are there other work areas or tasks where this type of incident could occur again?
4. If worker's actions contributed to the incident, why did the worker feel this was the best course of action at the time?
5. What processes were in place to prevent the incident? Identify processes that failed.
6. Is there any other information that should be known that is relevant to this incident?
7. What processes could have been implemented or improved that might have prevented this incident?
8. What processes will be improved or implemented to reduce risk of recurrence? When will these new processes be in place?

FOR OFPC USE ONLY	
Level	☐Fire Alarm ☐First Aid ☐Level A ☐Near miss ☐Property Damage ☐Recordable ☐SWPP ☐Other
Incident Type:	☐Caught between ☐Electrical ☐Equipment handling ☐Fall ☐Fall protection ☐Foreign body ☐Haz mat ☐Heat exhaustion ☐Ladder ☐Material Handling ☐Puncture ☐Security ☐Slip/trip ☐SWPP ☐Tool handling ☐Worn Equipment ☐Other
Injury Type:	☐N/A ☐Blunt trauma ☐Chemical burn ☐Contusion ☐Cramps ☐Crushing ☐Dust in eye ☐Fall ☐Flash burn ☐Heat exhaustion ☐Insulation in eye ☐Knee blood blister ☐Laceration ☐Laceration & shock ☐Other ☐Puncture ☐Shock ☐Sprain ☐Strain

EXHIBIT K **INCIDENT NOTIFICATION FLOW CHART**

NOTE: if calling to report a **serious** incident and someone in the calling chain is unavailable, leave a message, but then jump to the next in the chain to ensure notification is made timely. For example, if contractor cannot reach the PM, contact SPM; SPM would then make the calls for the PM.

NOTE 2: A **serious** incident report will include status of the injured person and follow up until stabilized or back on the job at work.

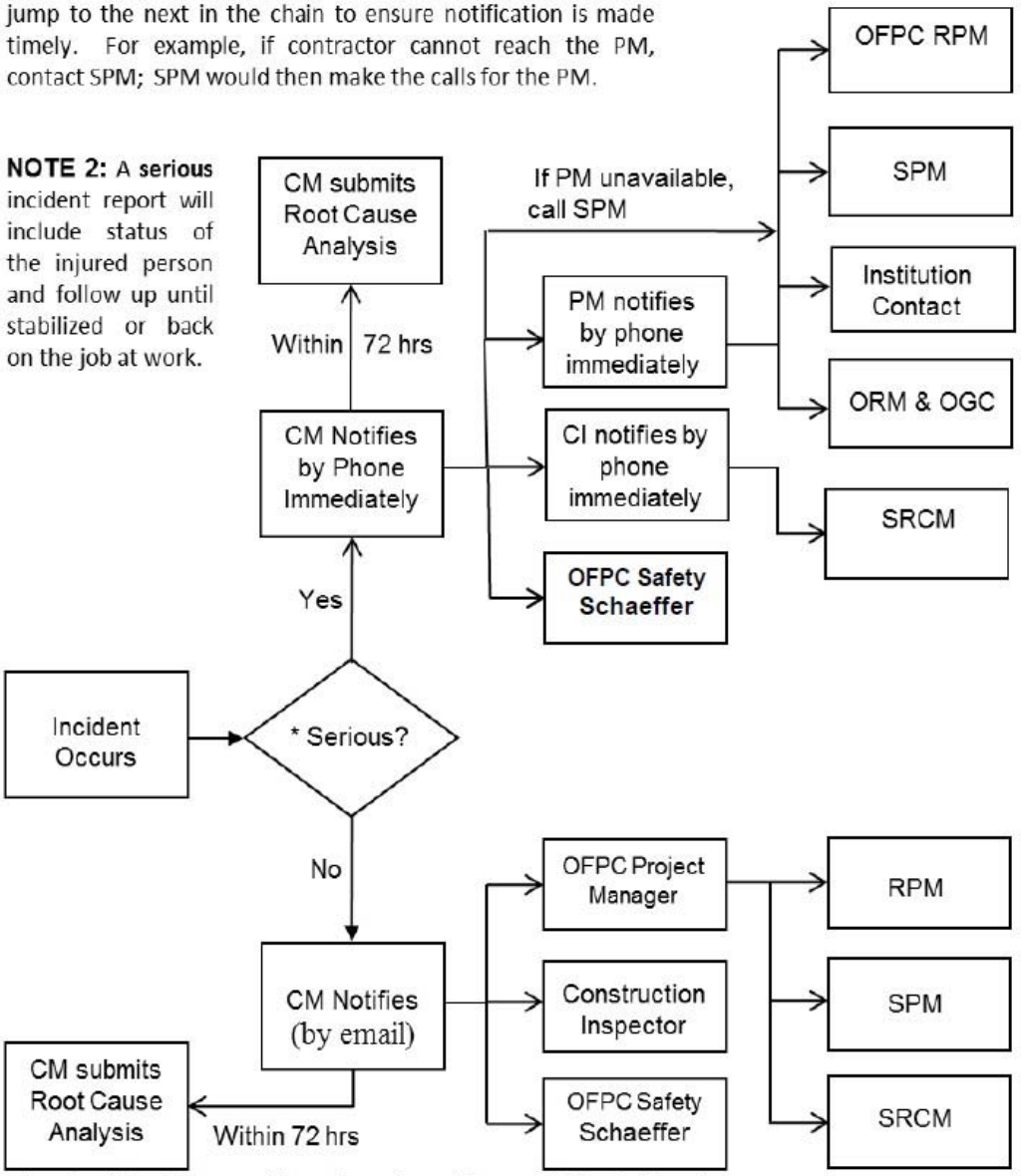

*** An incident is considered serious if any of the following occur:**

- EMS/Ambulance responds
- hospitalization is involved
- Life threatening or potentially life threatening
- Involves more than one employee injured

EXHIBIT L TOWER CRANE ERECTION / DISMANTLE DOCUMENTATION

The University of Texas System – Construction Project Safety

REQUIRED INFORMATION TO BE SUBMITTED AND REVIEWED PRIOR TO ANY TOWER CRANE ASSEMBLY OR DISASSEMBLY OPERATION

The plan will need to be submitted for review by Owner at least two weeks prior to the date of the planned erection or dismantle. OFPC will be providing a third-party consultant during the erection or dismantle process. No work will begin until all plan elements noted below have been submitted and reviewed for acceptance. The plan must include at a minimum:

1. Annual inspection of all assist cranes that will be utilized to erect or dismantle the tower crane.
2. Operator's nationally recognized certification(s) and supporting training documentation for all make and model of cranes that will be used. Operator's annual physical.
3. Qualifications (with supporting training documentation) for the Erection/Dismantle Director and all crew members, riggers and signal persons. Training documentation must include organization and person(s) that conducted the training, material covered in the training, time spent on each training element, and details to the evaluation process used to verify worker understanding of training. This may be through testing and/or demonstration of skills. Rigging can only be performed by persons who possess documentation of completion from a training program that carries recognized accreditation.
4. Verification of soil conditions for all anticipated mobile crane positions. Detailed plan with map for the location(s) of the assist crane(s) and associated hazards in close proximity to those locations. Plan to control identified hazards.
5. Training documents for all crew members for their assigned task(s). A letter indicating positions with no supporting documentation is not acceptable. Fall protection training must be included. See # 3 for the required training documentation.
6. Details for work stoppage due to high wind speed or other inclement weather conditions. The actual shutdown procedure, including who is responsible for shutdown determination and how it will be communicated to all affected workers.
7. Copy of the manufacturer's equipment manual for review for the make and model of tower crane that will be erected or dismantled.
8. Structural information regarding the tower crane base pad (prior to erection).
9. Details on sequencing for sectional assembly and bolting (including torque) (prior to assembly), details on sequencing for sectional disassembly with bolt removal procedure (prior to dismantle) and rigging procedure with verifications. Cannot indicate that plan will follow manufacturer's equipment manual.
10. Documentation showing that each worker has been drug/alcohol tested within two (2) weeks prior to work start on the project. Negative result per worker is needed for entry.

11. Prior to the assembly of a tower crane, the General Contractor will need to develop a High Angle Rescue Plan. The intent of this plan is to be able to effectively remove an individual from the horizontal portion of the crane in the event of an emergency prior to assembly and during use of tower crane.

REMINDER - this information submission in no way removes **the Contractor's safety professionals and project management team** from the obligation of ensuring all documentation is provided, reviewed for adequacy based on the planned task(s), ensuring that the work is pre-planned and communicated to all affected workers, all workers are properly trained to perform their individual tasks, and that all work is done according to the agreed upon plan and the manufacturer's requirements

EXHIBIT M **JOB HAZARD ANALYSIS FORM (MANDATORY)**

Daily Job Hazard Analysis

This JHA is valid only for the work and date specified. This JHA shall be posted at the immediate work area while the work is ongoing. If the noted conditions change, the JHA shall be re-evaluated to incorporate changes and reissued immediately. Any emergency or incident automatically invalidates this JHA. When this JHA expires, it must be returned to the PSC/PSA for record purposes.

Project Name and Number		Date and Time	
Company Name		Supervisor	

Description of work to be performed:

A. Are Permits Required? Are they displayed and properly signed by the PSC/PSA?

Hot Work	Y		N		Confined Space	Y		N	
Lockout/Tag-out	Y		N		Roadway Traffic	Y		N	
Excavation	Y		N		Other (specify)				

B. Atmospheric Monitoring

Oxygen Concentration	Y		N		Reading	
Combustible Gas/Flammable Vapors	Y		N		Reading	
Hazardous/Toxic Gas	Y		N		Reading	
Are concentration levels safe?	Y		N			

C. THINK about the work you and your crews will be doing today. Place a Y for Yes or N for No next to each element. All elements identified with a Y or Yes must be addressed in Section D.

C.1 Specialized Operations

	Confined Space		A-Frame Ladders		Other (provide details below)
	Aerial Man-lifts		Extension Ladders		
	Lockout/Tagout		Scissor Lifts		
	Excavations		Opening /Isolation of equipment		
	Trenches		Loading/Un-loading >50lbs		
	Motorized Equipment		Work on live equipment		
	Ground Supported Scaffold		Welding		
	Suspended Scaffold		Burning/Cutting operations		
	Mobile/Rubber Tire Crane		Work at Heights >6'		
	Tower Crane				

C.2 Hazards

	Airborne Particulates		Falls		Public Traffic (vehicle/Foot)
	Body Stress (hot/cold)		Slip/Trip Hazards		Repetitive Motion
	Lighting		Pinch Points		Lifting
	Noise		Electric Shock		Material Handling
	Radiation		Sharp Objects		Work of Others (specify)
	Chemical Exposure (skin/eyes/inhalation)		Thermal Burns		
	Flammable Materials		Housekeeping		
	Overhead Work		Obstructed View		Other Hazards (specify)
	Motorized Equipment		Awkward Positioning		
	Access/Egress Paths		Insects/Animals		
	Floor Cut-outs		Walking Surfaces		

C.3 Hazard Controls

	Hazard Assessment		Walking/working surfaces clear and unobstructed		Protective Suits
	Pre-task Planning		Proper storage of material and equipment		Hard Hats
	Worker Training		Equipment warning/safety devices operational		Safety Glasses
	Equipment Selection		Proper lifting,/placement/securing of material		Face Shield/Goggles
	Equipment Inspection		Fall protection in place/inspected/maintained		Traffic Safety Clothing
	Permits developed and reviewed		Housekeeping maintained daily and verified		Fall Protection
	Work area verification of conditions		Fire protection measures in place		Hearing Protection
	Review of As-builts		Equipment grounded/bonded		Gloves
	Utility owners contacted		Flash burns shielded		Respirator
	Utilities located and confirmed		Spark containment		Foot Protection
	Equipment operators qualified		Flow able material contained		Other (specify)
	Equipment training documented and on-hand		Emergency response in place and communicated		
	Atmospheric Testing		Barricades/covers/signs in place and secure		
	Live equipment isolated? (list equipment below)		Stand-by persons (specify name and task below)		

C.4 Proper PPE

	Competent Person (print name)		Spotter/Flagger/Traffic Control (print name and task)

D. This portion of this JHA is to be completed by the supervisor with input from crew members. Once complete this JHA must be reviewed with all affected crew members or when conditions change.

Work Activities based on C.1 _____

Possible Hazards base on C.2 _____

Controls to Address Hazards based on C.3 _____

C.5 Emergency Response			
Fire Extinguishers located at?		Report Emergencies to? (name & number)	
SDS located at?		(name & number)	
Eye Wash Station located at		Emergency alarm sounds like?	
Firs-aid/AED located at?		Muster Point is located at?	

E.	Crew Printed Name	Signature	Badge #		Crew Printed Name	Signature	Badge #
1.				11.			
2.				12.			
3.				13.			
4.				14.			
5.				15.			
6.				16.			
7.				17.			
8.				18.			
9.				19.			
10.				20.			

F. JHA developed and communicated by;		Daily JHA reviewed by (PSC/PSA):	
Printed Name	Signature	Printed Name	Signature
Date	Time	Date	Time

EXHIBIT N	CONTRACTOR ACKNOWLEDGEMENT STATEMENT

SAFETY SPECIFICATION 01 35 23
CONTRACTOR ACKNOWLEDGEMENT STATEMENT

Project: _____

Project No: _____

By executing this document as an authorized representative of the referenced Company identified below, I acknowledge and confirm that I have read and understand the contents of the UTS Safety Specification 01 35 23 in its entirety. I also recognize and acknowledge that the obligation to protect safety and health is not limited to the requirements of UTS Safety Specification 01 35 23 only, but also includes all applicable rules, regulations, and guidelines necessary to provide a safe and healthful working environment for all employers and employees on the project. The Company will comply with all applicable safety requirements.

The Company will further communicate the requirements of the UTS Safety Specifications 01 35 23 and other applicable safety rules, regulations and guidelines to all tiered Subcontractors that will perform work on the Project and obtain and submit to Owner a signed copy of this Contractor Acknowledgement Statement from each such Subcontractor.

_____
(Legal Name of Company)

_____
(Address)

_____
(Type Name of Officer)

_____
(Signature of Officer)

_____
(Title)

_____
(Date)

REVISION LOG

The following is provided for convenience to Owner, Architect/Engineer and Contractor to track changes between annual document issuances and is not to be considered by any party to be contractual or 100% complete.

Date	Paragraph Revised
02/01/08	Correct numbering in Section 3.8
06/01/08	Include SafetyNet Program in Section 2.4
04/01/09	Reissue date of substantially revised document. (not posted to eManual)
04/26/10	Reissue date of substantially revised document. Notable changes include: • increased experience level and qualifications of the Project Safety Coordinator (PSC) and Project Safety Assistant(s) (PSA) • modified the number of PSAs required on a Project and their start and conclusion of service days • increased credit for formal education, continuing education, and certification for PSCs and PSAs • modified OSHA 10/30 hour training requirements • modified hard had sticker process for equipment operators • modified safety vest requirement • modified height requirement for ladder use without fall protection • removed other exemptions for fall protection • added visitor waiver and release requirement and document • other cosmetic changes with no impact to content or intent of specifications.
3/24/11	Inclusion of criminal background check requirement and associated forms
5/17/11	Removal of criminal background check requirement and associated forms
9/1/12	Clarifications to align with SafetyNet data gathering and Exhibit title revisions
12/18/15	Inclusion of PSC in training and other minor clarifications
9/21/18	• Reformatted text describing requirements that exceed OSHA requirements; added statement at the beginning calling attention to the reformatted text; misc. edits • In general, clarified Owner's expectations and existing requirements throughout this document with revised terminology to align with industry • Updated reference to Safety Data Sheets in 2.11.2 and in Exhibits D and E • Added sections 2.12.18 through 2.12.21 • Clarified section 3.1.1 to ensure this specification is received and reviewed by subcontractors • Deleted section 3.1.7 in its entirety • Clarified section 3.2.2 regarding expectation of PSC/PSA admin duties • Clarified section 3.2.4 regarding Owner's position on Safety Recognition and Commendation • Added section 3.5.6 requiring the PSC to communicate the expulsion of a worker from the project site • Added section 3.6.6.4 related to metal fuel containers • Added section 3.6.6.5 related to liquid storage containers larger than 25 gallons • Added section 3.6.7.10 related to housekeeping of means of egress

	• Clarified requirement in section 3.6.8.5 related to physical barricades at ladder step-off landing areas • Added sections 3.6.10.5 through 3.6.10.7 related to motorized equipment operation • Updated wording to industry standard in Exhibit L • Added Exhibit N – UTS Safety Specification (01 35 23) Contractor Acknowledgment Statement

SECTION 01 35 25 – OWNER SAFETY REQUIREMENTS TABLE OF CONTENTS

1.01 .....RELATED DOCUMENTS 3

1.02 ..... SUMMARY 3

1.03 .....REFERENCE STANDARDS 3

1.04 ..... DEFINITIONS 4

1.05 .....EMERGENCY / IMPORTANT CONTACT INFORMATION 4

2.01 ..... GENERAL 4

3.01 ..... ASBESTOS CONTAINING MATERIAL 4

3.02 .....BLOODBORNE PATHOGENS 4

3.03 .....CELLULAR PHONE AND RADIO USE 5

3.04 ..... CONDUCT 6

3.05 ..... CONFINED SPACES 6

3.06 ..... CONSTRUCTION SAFETY SITE INSPECTIONS 7

3.07 ..... CONTRACTOR DAILY SIGN-IN AND WORK NOTIFICATION - HOUSTON 7

3.08 ..... CONTRACTOR DAILY SIGN-IN AND WORK NOTIFICATION – SMITHVILLE / BASTROP 7

3.09 ..... CONTRACTOR INJURIES AND INCIDENTS 8

3.10 ..... CONTRACTOR SAFETY ORIENTATION 8

3.11 .....ELECTRICAL SAFETY 8

3.12 .....EXCAVATIONS 9

3.13 .....FALL PROTECTION AND PREVENTION 10

3.14 ..... FIRE PREVENTION 10

3.15 .....FIRE REPORTING AND EVACUATION PLAN 12

3.16 ..... GENERAL SITE CONDITIONS – LIFE SAFETY 12

3.17 .....HAZARD COMMUNICATION (HAZCOM) 13

3.18 ..... HAZARDOUS WASTE AND WORK IN HAZARDOUS LOCATIONS 13

3.19 .....HOT WORK PERMITS 14

3.20 .....HURRICANE / SEVERE WEATHER PLANS FOR CONSTRUCTION SITES 15

3.21 ..... IDENTIFICATION (ID) BADGES 15

3.22 .....INTERIM LIFE SAFETY MEASURES (ILSM) GUIDELINE 16

3.23 .....LADDER SAFETY 16

3.24 .....LOCK OUT / TAG OUT 17

3.25..... .....MAINTAINING INDOOR AIR QUALITY (IAQ) DURING CONSTRUCTION AND RENOVATION ACTIVITIES 17

3.26 ..... PERSONAL PROTECTIVE EQUIPMENT (PPE) 18

3.27 ..... ROOF WORK 19

3.28 .....SANITATION AND HOUSEKEEPING 20

3.29 ..... SITE POSTINGS 21

3.30 .....SCAFFOLDING 21

SECTION 01 35 25 – OWNER SAFETY REQUIREMENTS

PART 1 - GENERAL

1.1 RELATED DOCUMENTS

A. Drawings and general provisions of the Contract, including General Conditions and Division 01 Specification Sections, apply to this Section.

B. Specifications throughout all Divisions of the Project Manual are directly applicable to this Section, and this Section is directly applicable to them.

C. For projects enrolled under the Owner Controlled Insurance Program (OCIP), this Section supplements Section 01 35 23 Project Safety Requirements, with additional Owner requirements for work within existing facilities or for work in areas controlled by the Owner.

1.2 SUMMARY

A. The control of Project Safety by the Contractor is an essential element of performing work at The University of Texas MD Anderson Cancer Center (MD Anderson). The Contractor shall, at all times, provide adequate resources, equipment, training, and documentation to assure a safe work environment at the Project site and to instill a culture for safety in the behavior of all supervisors and workers. Every worker shall understand that safety and health issues always take precedence over all other considerations, and that identifying, reporting, and correcting unsafe acts and conditions are the responsibility of everyone at the Project site.

B. MD Anderson is dedicated to providing a safe healing and work environment for all patients, visitors, staff, students, guests, and Contractors.

C. The details of this document should be considered as supplemental requirements. The Contractor shall develop, implement, maintain, and submit to the Owner a written Project Safety Program that meets or exceeds all Federal, State, and Local standards and regulations pertaining to construction activities. The Contractor and every Subcontractor shall comply with the rules and guidelines outlined in this guideline. In any circumstances where this section differs with or conflicts with any standard or statutory requirement, the more stringent requirement shall apply. Contractors may use a company-wide safety program in lieu of the Project specific safety program as long as it meets or exceeds the requirements listed in these guidelines.

D. The Owner reserves the right to have any manager, supervisor or worker employed by the Contractor or Subcontractor removed from the Project for disregard of Project Safety requirements.

E. The Owner reserves the right to deduct from the Contract any safety related expenses that the Owner incurs, as a result of the Contractor's, or any Subcontractor's, disregard for Project safety.

1.3 REFERENCE STANDARDS

A. The latest published edition of a reference shall be applicable to this Project unless identified by a specific edition date.

B. All reference amendments adopted prior to the effective date of this Contract shall be applicable to this Project.

1.4 DEFINITIONS

A. The term “Owner’s Designated Representative” or “MD Anderson Representative”, as used throughout the document, shall refer any of the Owner’s Project management team, insurance carrier representative(s), Owner’s designated agent, or campus representative(s).

B. The term “Contractor” as used throughout the contract documents shall refer to the party having a direct contractual agreement with the owner to provide services. This term is to apply whether contractor is known as a prime contractor, general contractor, construction manager, or design/build contractor.

C. The term “subcontractor” as used throughout the contract documents shall refer to any on- site subcontractor, regardless of tier.

1.5 EMERGENCY / IMPORTANT CONTACT INFORMATION

A. Consult with your MD Anderson representative regarding the correct emergency contact information for the facility in which you are working. Each facility may have a different emergency call procedure.

PART 2 - PRODUCTS

2.1 GENERAL

A. All materials shall meet or exceed all applicable referenced standards, federal, state and local requirements, and conform to codes and ordinances of authorities having jurisdiction.

PART 3 - EXECUTION

3.1 ASBESTOS CONTAINING MATERIAL

A. Environmental Health Safety & Corporate Services (EHSCS) must review all Job sites prior to the start of a Project to determine the presence of Asbestos Containing Material (ACM).

B. All suspect materials shall be considered asbestos-containing material until identified otherwise by an EPA approved method of analysis for identifying asbestos-containing material.

C. Any contractor personnel needing to disturb any suspected asbestos containing building materials shall first contact their MD Anderson representative. It is then the responsibility of the MD Anderson representative to contact EHSCS to determine if there is any asbestos containing materials present.

D. Contract personnel coming into contact with known or suspected asbestos containing materials (ACM) will:

1. Avoid any physical contact or other actions that may damage or otherwise disturb the material.

2. Submit all requests for sampling suspected asbestos containing materials through your MD Anderson representative. If the material has not been previously identified as containing asbestos, EHSCS personnel will sample the materials, obtain analysis, and report results to the requestor.

3.2 BLOODBORNE PATHOGENS

A. Contractors shall instruct their employees in the concept of standard precautions and document training in accordance with OHSA 29 CFR Section 1910.1030.

B. The contractor must take every effort to prevent exposure to blood and/or body fluids while in the hospital.

C. Patient care and research areas are considered to have the potential for exposure and special instructions may be given by the nursing or research staff on how to avoid potential contamination. Contact your MD Anderson Representative to determine if an exposure potential exists for all areas in which you will be working.

D. Contractors shall not handle bags or containers identified as containing potentially infectious materials. Contractors may contact EHSCS at 713-792-2888 for additional questions.

E. For Smithville / Bastrop, contractors may contact EHSCS with additional questions at:

1. Smithville Office Phone: 512-237-9522; 9536

2. Bastrop Office Phone: 512-332-5232

3.3 CELLULAR PHONE AND RADIO USE

A. The use of the following devices in PMA locations should be used with caution (beyond six feet of physiological monitoring systems):

1. Cellular Phones

2. Computers with wireless capabilities

3. Two-way pagers

4. Wireless handheld devices

B. Definitions:

1. Cellular Phone – Telephone that uses a frequency range of 800 - 1910 MHz to transmit voice and data to a remote cell and up to 625mW of power.

2. Close Proximity - within twenty (20) feet for two-way radios and within three (3) feet for cell phones and others of a physiological monitoring system.

3. Non PMA Area - an area of M.D. Anderson facility outside of the defined PMA areas.

4. Physiological monitoring area (PMA)- An area of M.D. Anderson facility where patients are likely to require the use of a physiological monitoring (e.g., Electrocardiograph, electroencephalographs, pulse oximetry, cardiac output, invasive pressure, etc.) for care or treatment.

5. PMA Locations: Bone Marrow Unit (G11), Cardiac Unit (P12), Cardio-Pulmonary Clinic (R8), Diagnostic Imaging (G3, R3, B3, ACB4-ACB7), Emergency Center (R1, P1, P2), Endoscopy Clinic (R5), Intensive Care Unit (G7), Operating Rooms (G5, ACB4), Pediatric Unit (G9, R7), Post Anesthesia Care Unit (G3, G5, ACB4, P3 Pod B), Rehab and Patient Therapy (P8), and the Telemetry Unit (P7).

6. Wireless Communication Devices - Cellular telephones and two way radios are the only devices currently defined as having caused interference to medical devices.

7. Two Way Radios – “Walkie-talkies" which use a frequency range of 29 - 1000 MHz to transmit voice between two locations up to 5 watts of power.

8. Wireless Handheld Devices – Commonly known as PDA (Personal Digital Assistant). Devices that provide a range of personal information management, voice communication, data communication, and computing capabilities, that relies on wireless technology to transfer or retrieve data. May include Palm Pilot, Pocket PC, Blackberry, Smartphone, or similar devices with operating frequency of 800 to 1900 MHz.

C. If allowed to be turned on, the volume of radios and cellular telephones must be turned down to minimize disruption to patients and operations.

3.4 CONDUCT

A. The use or consumption of alcoholic beverages or controlled substances is strictly forbidden on any Institution owned or controlled property.

B. Contractor shall not permit any person to operate a motor vehicle or heavy equipment while taking prescription or non-prescription medication that may impair their ability to operate safely.

C. MD Anderson is a NO SMOKING Institution. No smoking or use of tobacco products is allowed on any Institutional property. There are no designated smoking areas. Anyone found smoking will be immediately removed from the jobsite.

D. Contractor personnel shall be courteous to all tenants, business invitees, patients, visitors, and employees.

E. Unacceptable behavior on the part of the workers anywhere on campus, including parking lots, the project site, the accessible route(s) through the site or through the campus may lead to the identifiable contractors being removed from the project.

F. Personal grooming, personal hygiene and language by contractors must be constructed in a professional manner at all times. Use of foul and off-color language will not be tolerated and can result in contractor removal from jobsite.

G. Shirts must have sleeves of at least 3 inches, measured from the armpit seam. All buttoned shirts must be buttoned to at least the third button from the top. T-shirt styles may be approved if they are part of a company uniform or contain no political or offensive language or images. For additional guidance, see Section 3.26 Personal Protective Equipment.

H. Pants that are excessively loose, torn, ragged or with dragging cuffs will not be permitted. Shorts are not allowed.

I. No clothing, accessories, or hardhat stickers that display offensive, derogatory or inflammatory wording or graphics shall be worn on any institution owned or controlled property.

J. All clothing must be in good repair and free of any large holes or major damage. All clothing must be clean and sanitary at the start of each work shift and periodically cleaned to prevent tracking dust and debris out of the construction area.

K. Workers clothing must be clean of visible dusts and dirt when outside of the project site.

L. No radios or music shall be allowed on the project including headphone systems. Personnel must be able to hear alarms and warnings in the immediate area. (This does not pertain to the use of two-way hand held communication equipment or phones).

M. No tools or equipment will be loaned by owner to contractors to assist them in completing projects.

N. Contractor personnel shall not tape back lock/latch mechanisms nor prop open any exterior door, security door, stairwell door, or fire / smoke door. Personnel may not disconnect any electronic security device or defeat lock systems.

3.5 CONFINED SPACES

A. MD Anderson does not provide any confined space entry support such as sampling, entry permits, rescue personnel, rescue equipment, etc., for contractor personnel.

B. Contractors are responsible for ensuring all of their employees are trained on the recognition and significance of confined space entry procedures in accordance with 29 CFR 1910.146.

C. It will be the responsibility of the contractor performing the work inside the confined space to provide the necessary equipment to assess the hazards within the space and prepare the space for entry and to meet the precautions of the entry permit.

D. Contractor shall provide all emergency rescue equipment and personnel as required by 29 CFR 1910.146, as applicable.

E. The contractor conducting the work inside a permit-required confined space shall follow, at a minimum, all applicable OSHA requirements.

3.6 CONSTRUCTION SAFETY SITE INSPECTIONS

A. All construction sites will be subject to periodic inspections by EHSCS representatives. The inspector(s) will be looking for life safety, environmental, construction safety, and indoor air quality deficiencies. Once noted, the inspector will notify the MD Anderson representative responsible for the site. The inspector may also notify the contractor representative on site.

B. All noted deficiencies shall be immediately corrected. Contractor shall provide a response to the EHSCS safety inspector within 3 business days of the original safety report.

C. The inspector will be enforcing IAQ measures found in the “Maintaining Indoor Air Quality During Construction and Renovation” policy / procedures and other requirements set forth in the MD Anderson construction specifications for that project. (See Attachment A).

D. A job or activity will be suspended if an imminent danger to patients, animals, visitors, employees, Contractor personnel or facilities is observed.

3.7 CONTRACTOR DAILY SIGN-IN AND WORK NOTIFICATION - HOUSTON

A. Contractors must follow any specific check-in procedures for the facilities in which they will be working. Your MD Anderson representative will inform you of these procedures.

B. All Contractors/vendors must wear an MD Anderson-issued ID badge at all times while on property owned or under the control of the Institution. Badge must be worn and be visible at all times. Contact your MD Anderson Representative for assistance in obtaining an ID badge.

3.8 CONTRACTOR DAILY SIGN-IN AND WORK NOTIFICATION – SMITHVILLE / BASTROP

A. Contractors/Vendors hired by the Facilities Management Division must register their activities with Facilities Management before commencing work.

B. Contractors coordinate with Project Managers for access to the campus. Contractors must submit a construction schedule to Physical Plant Management.

C. Physical Plant informs Facilities Management of contractors schedule as well as the badge numbers issued to that contractor. Facilities Management will issue badges to contractor for their use while on the property. Contractors are responsible for distributing the badges as needed.

D. Contractor/vendor registration is performed in the Physical Plant Building.

E. All Contractors/vendors must wear an MD Anderson-issued ID badge at all times while on property owned or under the control of the Institution.

F. Contractors/vendors who fail to register with Physical Plant Management are subject to removal from the property by the UT Police.

3.9 CONTRACTOR INJURIES AND INCIDENTS

A. Contractors shall make prior provisions for the treatment of minor injuries.

B. Contractor is responsible for cleaning up all blood and body fluids and debris from accidents.

C. Contractor employees requiring immediate medical treatment should be taken to the emergency room of a local hospital. MD Anderson does not provide medical treatment to Contractors engaged in projects.

D. If an injured worker cannot be moved and assistance is needed, contact the Houston or local Fire Department (911) for an ambulance.

E. An injury requiring treatment beyond minor Job Site First Aid, shall be reported immediately to your MD Anderson Representative or Designee and Monitoring Services 713-792-2888 (All Houston Locations) and UTPD Smithville/Bastrop at 512-332-5371 or 512-237-9411

F. A copy of the incident / accident report must be provided in a timely manner to your MD Anderson Representative. A preliminary report must be made within 24 hours of the end of the next working day.

G. All incidents that result in property damage must be reported to your MD Anderson Representative.

3.10 CONTRACTOR SAFETY ORIENTATION

A. All Contractor personnel are required to complete the MD Anderson Construction Safety and Infection Control Orientation Training given by the EHSCS Office before beginning work at the Institution. Videos can be requested through the EHSCS department or your MD Anderson Representative and are available in both English and Spanish.

B. Completion of orientation is required to obtain an MD Anderson hardhat sticker. .

C. The Contractor may be required to attend orientation again for refresher, and review any changes if deemed necessary by the Owner.

D. The Contractor's MD Anderson Representative must contact the EHSCS office to make arrangements for the orientation session.

E. It is the responsibility of the Contractor to ensure that the information given in the orientation session is understood by all workers (i.e., Spanish or other language translation).

3.11 ELECTRICAL SAFETY

A. Refer to Section 3.24 on Lock Out / Tag Out requirements.

B. All electrical power tools, equipment and extension cords shall be inspected daily before use. Defective items shall be immediately removed from service for repair or replacement.

C. NOTICE: RED OUTLETS are for power requirements provided by the Emergency Generator System and shall NOT be used by Contractor personnel.

D. Ground Fault Circuit Interrupters (GFCI's) shall be in use between any permanent receptacle and any Contractor equipment.

E. Temporary power panels shall have GFCI protected circuits built into the panel.

F. The GFCI shall be tested for function before plugging in any Contractor equipment.

G. Electrical power tools shall be grounded, or double insulated, or battery powered. The cord on the tool must be free of defects.

H. Battery powered portable hand tool battery charging stations are not to be plugged into hallway or exit stairs outlets or other areas so as not to create a trip hazard.

I. Extension cord sets shall be the “heavy duty” three-wire grounded type (14 gauge or larger), and must be rated for the particular application in which it is to be used.

J. Three-wire flat type extension cords are NOT permitted.

K. Defective cord ends must be replaced with a UL rated repair end; Contractor must follow the manufacturer instructions for repair installation.

L. Damage to the cord jacket shall not be taped over and must be repaired per manufacturer’s recommendations.

M. Extension cords shall be routed overhead whenever possible or otherwise protected against damage or tripping hazard by being securely taped to the floor or secured by other acceptable means and approved by the MD Anderson representative.

N. Running/hanging extension cords through ceiling spaces is not permitted. Special permission from EHSCS is required for any variation from this requirement.

O. Extension cords must be used as designed by the manufacturer. Avoid using extension cords in a manner to cause damage to the electrical system or cause personal injury.

P. All electrical shutdowns and electrical “taps” must be coordinated through the Project Manager or MD Anderson representative for that project.

Q. Contractors are absolutely not allowed to turn on/off any electrical source breakers or switches without permission from the respective MD Anderson Facilities Management representative for that building/space. This should be accomplished through a Utility Shutdown Request submitted by the Project Manager or MD Anderson representative.

R. Existing and new electrical equipment must be protected at all times from humidity, liquid material splashes, activities inducing to vapor formation and condensation.

S. No liquid materials shall be handled in electrical rooms, electrical equipment areas or areas adjacent to electrical equipment locations.

T. In the event that the contractor must handle liquid materials in the vicinity of electrical equipment locations, the contractor must inform the owner and seek written approval, prior to bringing those liquid materials to the above-mentioned locations.

3.12 EXCAVATIONS

A. All excavation shall have the following prerequisites:

1. Discussion with the appropriate MD Anderson representative or site owner/property manager of as-built locations of all underground utilities in the vicinity;

2. Where applicable, a phone call for utility “locates” shall be completed seventy-two (72) hours in advance. “Potholing” and hand excavation shall be required within three horizontal feet of “located” centerlines.

3. All excavations must follow the applicable OSHA guidelines and requirements as related to design and protection of excavations.

4. All trench excavations should be backfilled or plated at the end of each shift.

5. When an excavation cannot be backfilled or plated in the same day it is created, a highly visible hard and sturdy barricade such as a wooden fence or wooden railings shall be erected. Excavation protections in areas of traffic must comply with local, state, or federal safety standards.

6. Means of access into excavations shall be removed or physically barricaded at the end of each workday.

7. Excavations in areas of public access shall be secured with a temporary “hard” barricade such as solid fencing or wooden railings to prevent entry. These excavations and protection plans must be approved by the EHSCS office.

B. Where applicable, all required engineer stamped excavation plans must be readily available at all excavations for review by MD Anderson representative(s). Certificates of soil testing shall also be made available.

3.13 FALL PROTECTION AND PREVENTION

A. Work in areas not protected by a standard guardrail system or present a fall hazard greater than six (6) feet shall require compliance with all current applicable OSHA Fall Protection requirements and/or ANSI/WCA I-14.1 Window Cleaning Safety Standard.

B. The Contractor shall ensure that all workers exposed to fall hazards have been properly trained and equipped by their employer.

C. No worker or equipment shall be allowed to perform work directly above another worker unless adequate overhead protection is provided.

D. Covers or fencing of sufficient design shall be placed over holes, roof and floor openings or drop offs to prevent personnel or equipment from penetrating the opening. Floor openings shall be protected to maintain the required fire resistance rating.

E. Covers or fencing shall be physically secured and clearly marked with warning message, such as “Danger”, “Hole”, or “Cover! Do Not Remove”.

F. If a cover is too small for a warning message, it shall be painted bright orange or red.

G. All puncture and impalement exposures shall be covered or eliminated as soon as they are created. Exposed ends of rebar are to be covered with material that is designed to prevent impalement of a 250-pound body from a fall of four (4) feet.

3.14 FIRE PREVENTION

A. All combustible materials shall only be stored in approved areas as designated by the MD Anderson representative.

B. MD Anderson is a NO SMOKING facility. No smoking or use of tobacco products is allowed on any Institutional property. There are no designated smoking areas. Anyone found smoking will be immediately removed from the jobsite.

C. Contractor shall coordinate the covering and uncovering of smoke detectors with Owner’s EHSCS Department (713-792-2888) prior to starting work or upon discovery of such devices as work progresses. Covering smoke detectors with tape, rubber gloves, or any other method that can agitate or damage a detector is prohibited.

D.

E. For large or high dust generating projects, the contractor shall coordinate with their Project Manager or MD Anderson representative to arrange for the replacement of smoke detectors with heat detectors. EHSCS must approve all changes to any fire alarm or suppression systems.

F. Combustible scrap, trash, and debris shall be removed from the project site on a daily basis, or, more frequently as required.

G. Contractor shall not tape back door lock/latch mechanisms nor prop open any door, security door, stairwell door, or fire / smoke door. Lock cores shall not be removed. Coordinate changing lock cores to the designated construction core lock with your MD Anderson representative.

H. Flammable products shall be limited to one days supply inside the building. Flammable products shall be stored outside the building or in approved UL Rated flammable storage cabinets. Flammable liquids shall be in approved safety cans or cans designed for their use.

I. No internal combustion engines or portable propane heating devices are allowed in any Institutional buildings unless approved by the Owner. Coordination of how gasoline will be transported through buildings and stairwells must be coordinated with your MD Anderson representative.

J. Absolutely no gasoline will be allowed inside MD Anderson owned buildings. For temporary use outdoors, only approved metal safety cans will be permitted.

K. Compressed flammable gas cylinders (i.e. acetylene) shall not remain inside the building overnight and must be removed from the premises at the conclusion of each workday. Oxygen cylinders must also be removed from the premises at the end of each workday. Gas bottles are not allowed to be stored in areas that are used as contractor offices.

L. The contractor shall also have the Safety Data Sheets (SDS) for each gas used available within 15 minutes when requested.

M. Compressed flammable gas cylinders, while on the project site, shall be secured by chain or other suitable method to prevent tipping or falling over. All safety caps shall be securely installed when tanks are not in use.

N. When working in the ceiling space or on rated fire/smoke rated walls and structures, all holes and penetrations for wires, conduits, piping, etc. shall be sleeved and sealed with a UL approved fire caulking / sealing compound at the end of each workday (except when UL listed assembly does not require a sleeve). Any holes that must remain overnight must be sealed with an equivalent temporary fire proofing material as approved by the MD Anderson representative.

O. Work on fire sprinkler and detection systems shall continue until the system operation is fully restored. No impairments will be allowed to extend beyond approved periods of time or during times when the site is unattended.

P. Shutdown of any fire suppression or detection systems/devices shall be coordinated through the Owner's designated representative. Unauthorized shutdown or disabling of life safety systems shall be grounds for immediate removal from the jobsite.

Q. All Contractors are required to supply and maintain a minimum of one currently tagged ABC fire extinguisher, 10 pound (Class 2-A) or greater. The use of a MD Anderson owned fire extinguisher will not be permitted. Requirements are as follows:

   1. Indoors - Within 100 feet of any Class-A hazard, within 25 feet of any hot work and one for every 3000 square feet of floor space.

   2. Outdoors – between 25 - 50 feet of any hot work.

R. All Contractor employees shall be trained on the proper use and handing of fire extinguishers.

S. If a project involves multiple locations on a single floor or on multiple floors, additional multi-purpose fire extinguishers are required. Hot work permit requires fire watch personnel on floors above and below.

T. The Owner may require additional extinguishers as dictated by the risk of each project or project area.

3.15 FIRE REPORTING AND EVACUATION PLAN

A. Contractor shall establish a designated emergency evacuation assembly area for all projects prior to starting work. Contractor shall train all employees on assembly area locations and how to get to each area.

B. For areas that do not allow a clear view of egress route, the contractor must post easy to understand maps, that are clearly visible to all workers and visitors, of the proper exit paths as required by OSHA and NFPA.

C. In the event of a fire alarm, all work is to stop, all sources of ignition or hazardous work shall be immediately halted and all personnel are to proceed to the door of the construction site and wait for further instructions.

D. In the event of a smoke, fire, or emergency incident the following procedures should be followed:

1. RACE – Rescue, Alarm, Confine, Evacuate/Extinguish

a. Rescue: rescue Patients, Visitors, Employees

b. Alarm: a fire alarm pull station should be activated as quickly as possible or call 911.

c. Confine: confine the fire or smoke by closing all doors to the area.

d. Evacuate/Extinguish: extinguish the fire after you have performed the above operations but only if you can do it safely.

E. When reporting a fire by phone:

1. The caller should provide their name, the location of the fire, and a brief description of the incident. The caller should not hang up until emergency services personnel instruct them to do so.

2. The caller should be prepared to guide the Fire Alarm Response Team and Emergency Responders to the fire location.

F. All contractor personnel shall report to their designated assembly area immediately. Contractor must coordinate the designated assembly area with their MD Anderson representative prior to the beginning of the project.

3.16 GENERAL SITE CONDITIONS – LIFE SAFETY

A. Contractors will comply with all OSHA and NFPA life safety requirements as related to emergency exiting and lighting for construction areas.

B. For areas that do not allow a clear view of egress route, the Contractor must post easy to understand maps, that are clearly visible to all workers and visitors, of the proper exit paths as required by OSHA and NFPA. Contractor should coordinate the creation of these maps with their MD Anderson representative.

C. Contractors are required to maintain any required temporary signs directing to exit routes. These signs shall be externally or internally illuminated by lighting that is either on emergency power or of the luminescent “glow-in-the dark” type.

D. All temporary lighting and bulb protective devices shall be maintained and in good working condition. Wiring for temporary lighting shall be removed at the conclusion of the project scope.

E. All emergency exit doors must be maintained and in good working order. Paths to exits must remain clear at all times.

F. Depending on the size of the project site and number of contractors working in the site, a contractor may be required to maintain at least two clearly marked exits per NFPA 101 and NFPA 241 requirements.

G. All exits must be clearly marked with the words “EXIT” or “EMERGENCY EXIT”. Doors that the contractor does not want to use for daily access may be marked with the words “EMERGENCY EXIT ONLY”.

H. All entry doors/gates to the project site shall be locked utilizing a green construction core in the lockset. Due to life safety requirements, chains and/or pad locks will not be permitted on any door. Contact your M.D. Anderson representative for the proper lock cores and keys.

I. If a combination key pad is installed on a jobsite, the door must also be equipped with a green construction core to ensure emergency personnel maintain access to the site. Key pads without a construction core will not be permitted. Contractor must also ensure that the combination to the key pad is not posted on the wall or door of the site. If this occurs, the combination must be changed immediately.

3.17 HAZARD COMMUNICATION (HAZCOM)

A. The Contractor shall provide training and maintain documentation that their personnel and Subcontractors have received proper training in Hazard Communications under the provisions of OSHA’s requirements in 29 CFR 1910.1200 and/or 1926.59.

B. A printed, legible copy of the Safety Data Sheet (SDS) shall be made available within 15 minutes of a request for each chemical used on the job site.

3.18 HAZARDOUS WASTE AND WORK IN HAZARDOUS LOCATIONS

A. Owner chemical, biological or radioactive materials (hazardous substances and equipment) must be moved or secured prior to beginning work in any area. Contractor shall coordinate the removal of these items with their MD Anderson representative.

B. The Contractor’s MD Anderson representative will coordinate any pre-site assessments with EHSCS, the laboratory principle investigator, clinic representative or laboratory manager to prevent disturbing experiments/animals or creating accidents.

C. All contractors must have permission from their MD Anderson representative and the laboratory manager or clinic representative before entering laboratory or hospital clinical work areas.

D. Disposal of all hazardous wastes generated by contractor activities is the responsibility of the contractor. All wastes must be removed from the premises.

E. Absolutely no chemicals, trash, paint, paint brush rinse, shop vacuum contents, excess materials, sand, dirt, etc. may be disposed of in storm sewers/drains or sanitary drains.

F. Contractor must prevent dirt from entering exterior storm drains by adding appropriate silt protection screen material to all exterior drains that may be impacted by the project.

G. Contractor must follow all requirements set forth in the Storm Water Pollution Prevention Plan (SWPPP) as indicated in the appropriate Project Specification (Section 01 57 23). Consult the EHSCS Office (713-792-2888) for questions regarding environmental permitting and plans.

H. All hazardous waste, fuel, oils, and chemicals stored outdoors must have adequate secondary containment to prevent discharge onto the ground or in storm or sanitary sewer drains. All containers must be stored to prevent theft or unauthorized access. All containers outdoors must also be protected from weather elements and secured from public access.

I. Contractor shall ensure that adequate spill protection equipment and supplies are readily available during all equipment refueling activities.

3.19 HOT WORK PERMITS

A. A valid and signed Hot Work Permit must be obtained anytime work being implemented involves the use of any incendiary or heating devices such as:

1. Electric Arc Welding

2. Oxygen Acetylene Welding

3. Tig/Mig Welding

4. Cutting/Soldering

5. Propane Torch

6. High Heat Producing Sources

7. Spark Producing Activities

8. Gasoline, diesel, or propane powered equipment used indoors, on roof surfaces, or within distances that could pose a threat of fire to facilities.

B. Determination of Contractor Hot Work Permit Process or UTMDACC Hot Work Process to be used made prior to beginning of project work.

C. All Smithville/Bastrop hot work applicants must go to Research and Administrative Facilities (RAF) office and fill out a blank Hot Work Permit. Instructions on how to properly fill out the permit are available.

D. Permits to work on ANY medical gas systems must be obtained from the Facilities Department responsible for that area prior to work.

E. Hot Work Permits shall be approved on and for the day of work and posted in the vicinity of any burning or welding operations that are to be completed inside or near a building or enclosure. Permits are issued for day of work only.

F. Hot work applicants must call 713-563-5000 to obtain the appropriate facility representative to issue a hot work permit for the facility in which they are working.

G. Responsibilities:

1. It is the responsibility of the contractor, vendor, and/or MD Anderson workforce members to read, understand, and acknowledge sections I, II, and III of the Hot Work Permit.

2. It is the responsibility of the facilities representative to complete Section IV and sign on the day of work.

3. Contractors are responsible for ensuring all of their authorized and affected employees are trained on the significance of welding, cutting, and brazing procedures in accordance with OSHA regulations 29 CFR 1910.252 - 1910.255.

4. At the end of any cutting operation or at the end of the day, all fuel gas cylinders must be removed from the facility. Fuel gas cylinders WILL NOT be allowed to remain in the facility overnight.

5. Anti-flashback arrestors shall be installed at the base of all Oxy-Acetylene cutting torches or at the pressure regulator gauges where the hoses are attached, unless the torch is equipped with a built-in arrestor. Only friction strikers shall be used to light and re-light Oxy-Acetylene torches.

6. Fire watch personnel shall be posted at every operation that produces sparks, flames or sufficient heat to create an ignition. Upon request for a hot work permit, fire watch personnel shall provide verification of successful Fire Watch training by the Houston Area Safety Council (HASC) or similar entity. Failure to provide current documentation will result in a denial of the hot work permit. Additional fire watch personnel shall be posted in all areas in which hot work sparks, slag, heat, etc. go beyond the sight of the primary fire watch.

7. Except in a fabrication shop or in front of a properly guarded grinding wheel, the person performing the work may not act as a fire watch personnel. When sparks, slag, or fire may fall to a different level, separate fire watch personnel shall monitor each level directly below the work (including exterior locations).

8. Heaters for welding electrodes shall have a manufacturer's label that certifies the purpose of the unit. Job-built heaters shall be prohibited.

9. The remains of welding electrodes shall be picked up and disposed of as soon as each electrode is expended. No welding electrode shall be permitted to fall and remain in the work area.

10. All temporary fabrication areas shall be approved by the facilities representative prior to starting work.

3.20 HURRICANE / SEVERE WEATHER PLANS FOR CONSTRUCTION SITES

A. Construction sites may be required to have a Hurricane/Severe Weather Plan special to that site. Consult with your MD Anderson representative for applicability, as some departments may require this plan for small projects.

B. A copy of the Hurricane/Severe Weather Plan must be submitted to your respective MD Anderson representative prior to starting work.

C. The Texas Medical Center (TMC) Emergency Preparedness Office or Campus Director (Smithville/Bastrop) will issue warning levels in the event of possible flooding or hurricanes. Contractors are urged to learn more about the TMC warning system by contacting their MD Anderson representatives.

3.21 IDENTIFICATION (ID) BADGES

A. It is the policy of The University of Texas MD Anderson Cancer Center to issue an identification (ID) badge to each employee and to all temporary agency and contractor personnel.

B. All badge requests must be processed by the MD Anderson department (i.e., PCPF, RAF, FPDC, , etc.) that is issuing the contract for work.

C. ID badges must be worn at all times in a highly visible manner while on property owned or under the control of the Institution.

D. Contractors are responsible for returning any badges for personnel that will no longer be providing services to the institution within one week after termination or conclusion of project.

E. The badge must be clearly visible to someone facing the wearer.

F. A fee may be required to replace a lost contractor badge. Lost identification badges that have programmed electronic access must be reported to the contracting department representative (i.e. Project Manager) immediately.

G. Personnel not wearing proper identification may be subject to immediate removal from the jobsite.

3.22 INTERIM LIFE SAFETY MEASURES (ILSM) GUIDELINE

A. Interim Life Safety Measures (ILSM) – Is a series of administrative actions required to temporarily compensate for significant hazards posed by existing National Fire Protection Association 101, as cited in UT MD Anderson Design Guide Element Z2005 Life Safety Code (LSC) deficiencies or construction activities.

B. All Contractors are required to abide by any ILSM requirements that may be implemented by the owner due to a temporary deficiency/hazardous condition and must be continuously enforced through project completion or until the deficiency is corrected. Each contractor shall be responsible for ensuring all personnel on site are aware of the Interim Life Safety Measures implemented.

C. Contractors may be required to keep daily logs of the condition of their jobsites.

3.23 LADDER SAFETY

A. Ladders must be inspected prior to each use. Defective ladders shall be immediately removed from service and removed from the job site.

B. Ladders shall be used only in accordance with the manufacturer's labeled instructions.

C. Stepladders shall be used only in the fully open position with spreaders locked in place. Using a folded stepladder leaned against a support is prohibited.

D. Employees shall not stand on the top platform, the step below the top platform or the back stretchers.

E. Do not sit on, or straddle the top platform.

F. Stepladders shall not be used for access to platforms or other elevated areas – an extension ladder is required.

G. Extension ladders must be properly positioned and locked in place.

H. Extension ladders used for access to elevated areas shall extend at least three feet beyond the supporting structure.

I. Extension ladders must be secured to the supporting structure or be held at the base by another employee.

J. Job built ladders shall conform to applicable ANSI Standards AND shall be limited to use in excavations or concrete form work only. These types of ladders must be inspected daily.

K. At the end of each workday, remove and store, or secure from use all portable and job-built ladders that provide ground access to any elevated platform or structure so as to prevent unauthorized access.

L. Chaining ladders to equipment or mechanical, electrical, or plumbing fixtures or piping is prohibited. Ladders must be stored in a manner to prevent blocked fire exits or escape routes. Ladders must not block access to equipment or facilities.

M. Portable stepladders and extension ladders shall be rated class I-A.

N. Ladders that have multiple sections that can be manipulated to form multiple surfaces and angles are not allowed.

O. Aluminum ladders are prohibited.

P. All exceptions to these requirements must be approved by MD Anderson EHSCS department..

3.24 LOCK OUT / TAG OUT

A. It is the policy of The University of Texas MD Anderson Cancer Center that its employees and contractors are protected from all energy sources during maintenance and repair activities.

B. Each facility has a Lock Out/Tag Out program. Contractors whose work will involve the Lock Out/Tag Out process shall comply with the provisions of the respective facilities management program and procedures. If there is a difference between the contractor's program and the institution's program, the more stringent procedure shall prevail.

C. Lock Out/Tag Out procedures may be specific to each type of equipment or device. Consult with the facility maintenance department for specific procedures.

D. Contractors are responsible for ensuring all of their authorized and affected employees are trained on the significance of Lock Out/Tag Out procedures in accordance with 29 CFR 1910.147 and must follow these requirements.

E. Only the authorized employee or contractor who applied a device is allowed to remove his/ her lock out or tag out device from each energy-isolating device so energy can be restored to the equipment. MD Anderson personnel may add locks or tags to tagged-out devices – contractors are not allowed to remove these locks or tags.

F. Never remove another person's tag/lock. Unauthorized removal of tags/locks will be grounds for immediate and permanent removal from the jobsite.

G. If tags/locks remain on equipment, contact the appropriate personnel or department for resolution to the removal process.

3.25 MAINTAINING INDOOR AIR QUALITY (IAQ) DURING CONSTRUCTION AND RENOVATION ACTIVITIES

A. It is critical to our patient's health that proper controls are in place to ensure indoor air quality is maintained during construction and renovation activities. These activities disturb existing dust and/or create new dust, which causes the release of Aspergillus and other mold spores into the air. These spores can result in serious complications, and potentially death, for immuno-compromised individuals.

B. The guideline covers all contractors involved in building maintenance, construction, renovation and/or repair and applies to all areas of the Institution.

C. An Indoor Air Quality (IAQ) Permit may be required for every project, no matter the duration. The permit explains the requirements needed to maintain the best possible air quality outside the work site.

D. This permit shall be posted at the site and shall remain posted until the completion of the project.

E. EHSCS will perform periodic inspections, verifying that the proper controls are in place and will periodically monitor sites with instruments used to measure applicable indoor air quality (IAQ) parameters.

F. Contractor must follow the requirements of the Indoor Air Quality Permit and the Maintaining Indoor Air Quality During Construction and Renovation Policy.

G. See Attachment A for the "Maintaining Indoor Air Quality During Construction and Renovation Policy" for the requirements that must be followed for each project. This policy is a guide to the minimum protective measures that are to be in place prior to start of all projects.

3.26 PERSONAL PROTECTIVE EQUIPMENT (PPE)

A. The minimum OSHA requirements for Personal Protective Equipment (PPE) shall be required of ALL persons on the project site. Each contractor/subcontractor shall provide their workers with all required PPE. The contractor is responsible to ensure that PPE is inspected and maintained in proper condition.

B. Safety Hard Hats: When required, every person in the project shall wear a hard hat that meets the minimum OSHA requirements.

C. When required, hardhats are to be worn and maintained in accordance with the manufacturer's recommendations. "Cowboy" style hard hats shall not be allowed, including ANSI approved hats. Hard hats that display noticeable wear or damage shall be replaced or repaired per manufacturer's specifications.

D. Eye Protection: When required, every person on the project shall wear eye protection. Additional face protection may be required when work operations create airborne particles, chips, or sparks. Eye protection and face protection shall meet the minimum OSHA requirements.

E. Shoes: when required, every worker on the project shall wear shoes that have soles with a resistance to punctures, leather or leather equivalent uppers that cover the entire foot and ankle and offer resistance to scrapes and cuts. Sandals, open-toed shoes, dress loafers, high-heels, fabric shoes and all athletic style shoes (including those with ANSI markings) are prohibited.

F. When required, exterior toe and metatarsal cover shall be used when activities involve impact exposures to the feet (ie; jackhammering, water blasting, concrete demolition etc), unless the shoe has this protection built into the footwear.

G. Clothing: when required, sleeve length shall cover the ball of the shoulder. Shirts shall not have noticeable holes, be long enough to be tucked into pants and be free of profanity, objectionable, or obscene messages. Pants shall be full length and without excessive holes.

H. Hearing Protection: when required, employees shall be provided with hearing protection against the effects of noise exposures from machines, equipment or surrounding operations generating sound levels that exceed OSHA hearing protection requirements. Employees required to use hearing protection shall be tested and trained in the use and limitations of such protection.

I. Hand Protection: when required, employees handling materials or equipment with potential hand injury hazards shall be provided with appropriate hand protection.

J. Harnesses, Lifelines, and Lanyards: when required, employees working in areas where there is an exposure to falls of heights greater than six (6) feet, regardless of work activities (i.e. steel erection, leading edge work, scaffold use, and brick masonry) shall be protected by measures that comply with the ANSI/ASSE Z359 Fall Protection Standard.

K. Respiratory Protection: when required, employees shall be provided with respirators when it is necessary to protect them from inhalation of toxic or harmful gases, vapors, mists, fumes, and dust.

L. When required, employees required to use respiratory protective equipment shall be medically qualified and thoroughly trained in the use and limitations of such equipment. Employer must demonstrate compliance with OSHA 29 CFR 1910.134.

M. Other PPE: when required, employees working in areas where there is a possible danger to other parts of the body not listed above shall be protected by the appropriate PPE for that body part.

3.27 ROOF WORK

A. All roof work must be approved by the Research and Administrative Facilities (RAF) - Chief Engineer at the campus you are working at prior to project start.

B. All roof access to T. Boone Pickens Tower must be approved prior to access. This area contains multiple radio transmitters and receivers that emit harmful radio and microwaves. All personnel accessing this area must have attended the required training. Contact the building owner for training requirements.

C. Contractor is responsible for ensuring that they are able to immediately contact emergency forces during an emergency event by providing cell phones, radios, or access to working phones within MD Anderson facilities. Contractor shall ensure personnel working on the jobsite know the address of the building.

D. Any roof repairs that are performed around fresh air intakes shall be scheduled with the respective facilities operations group prior to any planned work. Contractor is required to provide fume control devices when performing roof repair, replacement, or installation to prevent odors from being transmitted inside the facility.

E. Some areas of roofs may be restricted due to potentially hazardous exhaust from laboratories or processes. Contractor must obtain approval from their MD Anderson representative before proceeding with entering any roof areas.

F. Contractors are required to comply with all applicable OSHA and ANSI Fall Protection requirements.

G. Contact Research and Administrative (RAF) Chief Engineer and EHSCS OHS group regarding proper davit use and tie-off areas.

H. All roof work involving heated materials or open flames must have a valid hot work permit.

I. The Contractor shall have a 20 pound ABC Fire Extinguisher on the roof and immediately available for use. Institutional fire extinguishers will not be loaned. Additional extinguishers must be provided as needed.

J. All fire extinguishers must have current annual certification tags and in working order.

K. All open flames must be continuously supervised.

L. A 2-hour fire watch must be provided after any heated materials or open flames have been used during roof work. Fire watch personnel must perform a “touch test” to determine any residual hot spots. A laser thermometer is recommended.

M. All propane bottles must be removed from the premises daily. Do not store propane cylinders in mechanical or roof spaces.

N. All roofing materials shall be secured at the end of each workday to prevent disruption by wind and rain.

3.28 SANITATION AND HOUSEKEEPING

A. Contractors and subcontractors are responsible for ensuring that project sites are effectively cleaned.

B. “Effectively Cleaned” shall address all of the following issues:

1. Place all construction waste, trash, and debris in a designated receptacle. Glass bottles shall not be permitted in the project site. Trash must be removed on a daily basis as to prevent accumulation and attraction for pests. Contractor must have an approved method for removing trash from the jobsite (i.e., dumpsters, trucks, etc.) before starting work.

2. Eating is not allowed on the jobsite. Limited amounts of bottled soft drinks and water will be allowed but must be removed on a daily basis as to prevent attraction of insects or rodents.

3. Contractor may only use PUBLIC restroom facilities assigned by their MD Anderson representative. Contractors may not use staff restrooms.

4. Any waste, trash, and/or debris created by the contractor shall be cleaned (ie; sweeping, vacuuming, dust mopping, large debris removal etc.) at the end of the day to prevent accumulation of dirt and combustibles on the jobsite.

5. Contractors are NOT allowed to use sinks or drains to clean materials or paint brushes.

6. All holes and penetrations to the outside of the building must be sealed with an appropriate material as to prevent water, insects and rodents from entering the building.

7. All windows must remain closed unless permission is granted by EHSCS. All windows or penetrations used for ventilation purposes shall be protected from water, insect/rodent, and dust intrusion by use of protective covers and screen wire materials.

8. Stack (or restack) all whole and scrap materials in locations that do not obstruct a clear pathway nor create a risk for toppling onto a person passing by the area.

9. Place all hoses, cords, cables, and wires in locations that prevent them from damage and do not create tripping hazards.

10. Restore all signs, barricades, fire extinguishers, guardrails, gates, etc. to proper locations and condition.

11. Properly store and secure all flammable and combustible liquids and gases in proper containment or flammable storage cabinets.

12. Collect and place all cut-off or waste pieces of rolling stock, as they are created, into waste or scrap containers. No rolling stock shall be permitted to fall and remain in the work area.

13. Used shot strips from powder-actuated tools shall be properly maintained and disposed of in accordance with manufacturer's recommendations.

14. All puncture and impalement exposures shall be covered or eliminated as soon as they are created. Exposed ends of rebar are to be covered with material that is designed to prevent impalement of a 250-pound body from a fall of four (4) feet.

15. All work surfaces shall be maintained in level and smooth condition as to prevent rolling carts from catching and possibly falling over while in transit. Appropriate temporary fill materials shall be installed as warranted.

16. All wheeled equipment shall have non-marking wheels or tape shall be used over wheels when moving through non-project areas to prevent marking and damage to floor surfaces. Tape should be removed if adequate traction is required to perform a task. Tape can be removed once in job-site area.

17. Contractors shall only use their trash dumpsters or dumpsters designated by their MD Anderson representative.

3.29 SITE POSTINGS

A. Contractor shall securely post the required warning signs (as required by the Owner and OSHA) for the project area(s).

B. All signs must be approved by your MD Anderson representative. Consult your MD Anderson representative regarding facility specific informational signs.

1. Signs that warn of impending danger (i.e., CONSTRUCTION AREA – DO NOT ENTER)

2. Signs that communicate the level of personal protective equipment that is required (i.e., HARD HATS AND SAFETY GLASSES REQUIRED)

3. All necessary permits (i.e., Hot Work Permits, Indoor Air Quality Permit, ILSM and/or other State/Local Regulatory Agency Permits as required by law).

C. These postings must consist of the required color, size, and character size lettering and/or symbols as required by OSHA and/or Sate/Local regulations.

D. Signs must be made from a sturdy material that resists tearing and fading. Laminated signs are acceptable for indoor postings.

E. All exterior projects must contain the above noted required postings in all locations that warrant these warning signs and postings.

F. A single location such as a plywood project board is acceptable for posting required permits and project information signage. Any required permits should be protected from the elements by covering them in a laminate or waterproof material.

G. Contractor shall install and maintain any additional signs, barricades, warning devices, and traffic warnings.

3.30 SCAFFOLDING

A. All scaffold systems (any temporary elevated platform, supported or suspended) and its supporting structure (including its point of anchorage), used for supporting employees or materials or both) - shall follow the manufacturer instructions and adhere to all applicable OSHA requirements per each type of scaffolding device.

B. Contractor shall be required to receive permission from MD Anderson Facility – Research and Administrative Facilities before erecting any suspension or stationary scaffolding system on roofs or attaching lines to roof davits. Consult with the MD Anderson representative for approval before beginning any work.

C. All ground-supported scaffolds shall bear a safety tag that indicates the safety status of the scaffold. The contractor shall designate a universal project system for tagging scaffolding that is to be used by any or all personnel.

D. Training and documentation shall be required for all workers on the project who will erect, maintain, dismantle, or use the scaffolding. A designated competent person must ensure scaffold use requirements are maintained and inspected at the beginning of each work shift as per OSHA requirements. Contractor shall maintain documentation to support this requirement.

E. Contractor will ensure proper fall protection for employees is required and followed per OSHA requirements when using scaffolding and aerial lift.

F. Mudsills and surrounding areas at the base of ground-supported scaffolds shall be maintained in a well-dressed and level condition. Scaffold feet shall be installed on all legs and the maximum number of diagonal braces shall be included in every scaffold section.

G. Every work level shall be fully planked and toe board shall be included along open sides. Overhead protection shall be constructed where walk-through passages are allowed.

H. Brakes shall be secure at all times on rolling scaffolds, except when being moved. Workers shall not be allowed on the platform when the scaffold is being moved.

I. Rolling scaffolds shall not be used on uneven or unstable surfaces. Wheels shall be non-marking or temporarily covered with tape to prevent damage to floor surfaces when being moved through non-project areas.

ATTACHMENTS

1. ADM0175 Maintaining Indoor Air Quality During Construction and Renovation Activities Policy 20170418
2. Construction Risk Assessment Form ATT0321 20170616

END OF SECTION 01 35 25

FOR MDACC USE ONLY. DELETE THIS PAGE BEFORE ISSUING DOCUMENTS.

DOCUMENT REVISION HISTORY					
Issue	**Date**	**Revision Description**	**Author or SME**	**Approved By**	**Edited By**
Rev. 1	**202200206**	**Original Issuance**			**FPDC**
Rev. 2					
Rev. 3					
Rev. 4					
Rev. 5					
Rev. 6					

SECTION 01 45 00 - PROJECT QUALITY CONTROL

PART 1- GENERAL

1.1. RELATED DOCUMENTS

1.1.1. The Contractor's attention is specifically directed, but not limited, to the Uniform General Conditions for University of Texas System Building Construction Contracts (UGC) for other requirements.

1.2. SUMMARY

1.2.1. This Section provides administrative and procedural requirements for Contractor quality control on the Project.

1.2.2. Specific quality-control requirements for individual construction activities are specified in the Sections that govern those activities. Requirements in those Sections may also cover production of manufactured products.

1.2.3. Specified tests, inspections, and related actions do not limit Contractor's quality-control procedures to fully comply with the Contract Document requirements in all regards.

1.2.4. Provisions of this Section do not limit the requirements for the Contractor to provide quality-control services required by the Contract Documents or the Authority Having Jurisdiction.

1.2.5. The following quality issues are addressed in detail in this Section:

1.2.5.1. (1.3) Quality Control

1.2.5.2. (1.4) Quality Assurance

1.2.5.3. (1.5) Contractor Employed Testing Agency

1.2.5.4. (1.6) Testing

1.2.5.5. (1.7) Inspections

1.2.5.6. (1.8) Preinstallation Meetings

1.2.5.7. (1.9) Mock-ups

1.3. QUALITY CONTROL

1.3.1. Quality Control shall be the sole responsibility of the Contractor, unless specifically noted otherwise. The Contractor shall be responsible for all testing, coordination, start-up, operational checkout, and commissioning of all items of Work included in the Project, unless specifically noted otherwise. All costs for these services shall be included in the Contractor’s cost of work.

1.3.2. The Contractor shall assign one employee to be responsible for Quality Control. This individual may have other responsibilities, but may not be the Contractor’s Project superintendent or the Contractor’s Project manager.

1.4. QUALITY ASSURANCE

1.4.1. The Owner or Owner’s designated representative(s) will perform quality assurance. Owner’s quality assurance procedures may include observations, inspections, testing, verification,

monitoring and any other procedures deemed necessary by the Owner to verify compliance with the Contract Documents.

1.4.1.1. The Owner's quality assurance testing and inspection program is separate from Owner's commissioning program, as defined in Section 01 91 00 –General Commissioning Requirements.

1.4.2. The Contractor shall cooperate with and provide assistance to the Owner related to Owner's quality assurance procedures. Contractor shall provide to Owner ladders, lifts, scaffolds, lighting, protection, safety equipment and any other devices and/or equipment (including operators if required) deemed necessary by the Owner to access the Work for observation/inspection.

1.4.3. Owner may employ independent testing agencies to perform certain specified testing, as Owner deems necessary. The Contractor shall integrate Owner's independent testing services within the Baseline Schedule and with other Project activities.

1.4.4. Owner's employment of an independent testing agency does not relieve the Contractor of the Contractor's obligation to perform the Work in strict accordance with requirements of the Contract Documents.

1.5. TESTING AGENCY

1.5.1. The Contractor shall employ and pay for services of an independent testing agency to perform all specified testing requiring an independent agency, unless specifically noted otherwise.

1.5.2. Contractor's employment of an independent testing agency does not relieve the Contractor of the Contractor's obligation to perform the Work in strict accordance with requirements of the Contract Documents.

1.5.3. The Contractor Employed Testing Agency:

1.5.3.1. The testing agency must have the experience and capability to conduct testing and inspecting indicated by ASTM standards and that specializes in the types of tests and inspections to be performed.

1.5.3.2. The testing agency shall comply with requirements of ASTM E 329, ASTM E 543, ASTM E 548, ASTM C 1021, ASTM C 1077, ASTM C 1093, and other relevant ASTM standards.

1.5.3.3. The testing agency's laboratory must maintain a fulltime engineer on staff to oversee and review the services. The engineer must be licensed in the State of Texas.

1.5.3.4. The testing agency must calibrate all testing equipment at reasonable intervals (minimum yearly) with accuracy traceable to either National Bureau of Standards or accepted values of natural physical constants.

1.5.4. The Contractor shall not employ the same testing entity engaged by the Owner for the Project, without the Owner's written approval.

1.6. TESTING

1.6.1. Where specific testing is specified in a technical section of the Specifications or indicated in the Contract Documents, the Contractor shall bear all costs of such tests unless the Owner has expressly agreed in writing to pay for the tests.

1.6.2. Testing specifically identified to be conducted by Owner, will be performed by an independent entity and will be arranged and paid for by the Owner unless otherwise indicated in the Contract Documents. Should the test return unacceptable results, the Contractor shall bear all costs of retesting and reinspection as well as the cost of all material consumed by testing, and replacement of unsatisfactory material and/or workmanship.

1.6.3. The Contractor in cooperation with the Owner's Construction Inspector shall schedule the Owner's testing services.

1.6.4. The Owner may engage additional consultants for testing, air balancing, commissioning, or other special services. The activities of any such Owner consultants are in addition to Contractor testing of materials or systems necessary to prove that performance is in compliance with Contract requirements. The Contractor must cooperate with persons and firms engaged in these activities.

1.6.4.1. The Contractor shall self-perform various tests to verify performance and/or operation of various systems. Test reports that document the tests shall be consecutively numbered and defined by scope and extent of the test. Copies of the test report forms can be obtained from the Owner. The following Owner test report forms are examples of forms that shall be used for this purpose and shall not be altered in any manner:

1.6.4.1.1. Pipe Test Report.

1.6.4.1.2. Duct Test Report.

1.6.4.1.3. Equipment or System Start-up/Request for Inspection.

1.6.4.1.4. Contractor's Request for Utility Shutdown.

1.6.4.1.5. Domestic Water Sterilization and Flushing Report.

1.7. INSPECTIONS

1.7.1. All of the Work is subject to inspection and verification of correct operation prior to 100% payment of the line item(s) pertaining to that aspect of the Work.

1.7.2. The Contractor shall incorporate adequate time for performance of all inspections and correction of noted deficiencies into the Work Progress Schedule for the Project.

1.7.3. During the course of construction, the Owner, Architect/Engineer, and/or other Owner representatives may visit the Site for observation of the Work in place. The Contractor shall provide all necessary personnel and/or equipment for safe access to the Work to be inspected or observed, regardless of frequency. This requirement shall extend to all Owner personnel and their representatives. Some of these inspections will be informal and some will require formal notification by the Contractor.

1.7.4. For any requested inspection, the Contractor shall complete prior inspections to ensure that items are ready for inspection and acceptance by the Owner and/or Architect/Engineer. The Contractor shall be responsible for any and all costs incurred by Owner and/or Owner representatives, including consultants, resulting from a review or inspection that was scheduled prematurely.

1.7.5. The Contractor shall submit written notification to the Owner and Architect/Engineer a minimum of three (3) days and a maximum of eleven (11) days in advance of all requested inspections. Confirm advance notification time period with Owner for scheduling inspections.

1.7.6. The Contractor shall provide a system of tracking all field reports, describing items noted, and resolution of each item. The Owner will review reports on a monthly basis, or as necessary. Owner may require Contractor to track all inspection field reports within Owner's internet-based project management system.

1.7.7. The following are typical Project inspections:

1.7.7.1. Informal Daily Reviews of Project conditions by the Owner's Construction Inspector and/or members of the Project Team. When considered appropriate, results of these reviews will be documented via Observation Reports or Memorandum.

1.7.7.2. Concealed Space Inspections for subject areas that include partitions, structural walls, chases, crawl spaces, ceiling spaces, and any other Work, which will be difficult or impossible to examine once concealed in the final construction.

1.7.7.2.1. Contractor shall not enclose partitions, structural walls, chases, crawl spaces, ceiling spaces, and any other Work which will be difficult or impossible to examine once concealed in the final construction until Contractor has received written approval from Owner's Construction Inspector.

1.7.7.3. Progress Inspections for piping, ductwork, and other systems shall be scheduled by the Contractor through the Owner's Construction Inspector as appropriate portions, or sections, of the Work are completed. This is in addition to "system-wide" performance verification and tests. The Contractor shall schedule and document the tests using the standard Owner Pipe Test and Duct Test report forms. The Contractor shall conduct the tests and the Owner's Construction Inspector will witness and approve the results.

1.7.7.3.1. The Contractor shall coordinate their intended "apportioning" of systems tests with the Owner's Construction Inspector immediately following formal submission of their Work Progress Schedule so that all parties are aware of the intended Work and inspection sequence.

1.7.7.4. Overhead and Above Ceiling Inspections are similar in nature and requirements to the Concealed Space Inspections. Ceilings that are fixed in place, such as gypsum board or plaster, constitute a Concealed Space Inspection. Ceilings that are of "lay-in" type or where no finish ceiling is scheduled are considered an "overhead" inspection. Contractor shall include Overhead and Above Ceiling Inspections on the Work Progress Schedule.

1.7.7.4.1. No finish ceiling material shall be installed until all overhead Punchlist items have been resolved to the satisfaction of the Owner.

1.7.7.4.2. Completed Work in place necessary for an Overhead Inspection shall include all required infrastructure and appurtenances, inclusive of, but not limited to the following.

1.7.7.4.2.1. Installation of ceiling grid or framework.

1.7.7.4.2.2. Installation and operation of all above ceiling electrical Work, including light fixtures.

1.7.7.4.2.3. Installation of all HVAC and plumbing Work above ceiling with installation and connection of terminal units and air devices.

1.7.7.4.2.4. Installation of fire sprinkler heads.

1.7.7.4.2.5. Completion and Owner approval of all required tests for above ceiling Work.

1.7.7.5. Inspections of Building Systems and Equipment are intended to confirm acceptable operation. Contractor shall formally schedule inspections through the Owner's Construction Inspector and Architect/Engineer utilizing Owner's Inspection Request Form. Refer to Section 01 91 00 – General Commissioning Requirements and to Technical Specifications for additional requirements pertaining to system start-up, commissioning, operation, demonstration, and acceptance.

1.7.7.5.1. The Contractor shall perform a thorough checkout of operations with the manufacturer's representatives prior to requesting the formal inspection by the Owner. Contractor must notify the Owner's Construction Inspector, in advance, as to when the manufacturer's representative is scheduled to arrive at the Site.

1.7.7.5.2. For "building-wide" and/or life safety systems, such as emergency lighting, emergency power, uninterruptible power supply systems, fire alarm, fire sprinkler systems, smoke evacuation systems, toxic gas monitoring, captured exhaust systems, etc., the formal start-up inspection shall be completed prior to requesting Substantial Completion Inspection for any area of the Project.

1.7.7.5.3. The manufacturer's representatives and the installing contractor shall demonstrate both operation and compliance to the Owner's agents and consultants. If coordinated and scheduled appropriately by the Contractor, these equipment and/or systems inspections may also serve to provide the required Owner training, if approved in advance by the Owner.

1.7.7.6. A building systems final inspection with documented approval of individual equipment and/or system(s) must be accomplished prior to requesting Substantial Completion Inspection for any area affected by said equipment and/or system.

1.7.8. The Contractor is responsible for requesting that the Owner's Construction Inspector and Architect/Engineer arrange for the inspection of materials, equipment, and Work prior to assembly or enclosure that would make the materials, equipment, or Work inaccessible for inspection and at other times as may be required.

1.7.9. The Contractor shall coordinate the Work and schedule all inspections in advance so as not to delay the Work. All major inspections shall be indicated on the Work Progress Schedule for advance planning. Contractor shall allow a minimum of five (5) calendar days to confirm schedule of requested inspections with Owner's representatives.

1.8. PREINSTALLATION MEETINGS

1.8.1. The Contractor shall coordinate and conduct meetings to review the installation of major systems/equipment on the Project. As a minimum, Contractor shall schedule and conduct the Preinstallation Meeting(s) for the Work of each major building system. The Preinstallation Meeting(s) shall be convened following approval of system submittals and prior to commencement of system installation Work.

1.8.2. The purpose of the Preinstallation Meeting(s) is for the Contractor and all applicable subcontractors and/or suppliers and/or factory representatives to discuss all aspects of the installation of the particular system. Contractor shall direct special attention to the scheduled order of Work and any impact on or by any other building systems. Contractor shall develop a strategy acceptable to the Owner for start-up, inspection and acceptance, based on Contractor's Prefunctional Checklists, so that all parties are aware of what is expected and/or acceptable.

1.8.3. The Contractor shall ensure attendance of the installing subcontractor, manufacturer and/or supplier (if appropriate), supporting subcontractors involved in the installation, and any other parties involved in the phase of Work to be reviewed. Contractor shall notify the Owner and Architect/Engineer in writing at least five (5) days in advance of the Preinstallation Meeting(s).

1.8.4. Each party shall be prepared to discuss in detail the staging, installation procedure, quality control, testing/inspection, safety and any other pertinent items relating to the Work being reviewed. Submittal approval shall be a prerequisite of the Preinstallation Meeting(s). At this meeting(s), Contractor shall review and discuss the Commissioning Plan, test procedures, scheduling, and logistics. Contractor shall bring the following to the Preinstallation Meeting(s), as a minimum, for review and discussion:

1.8.4.1. Portion of the Initial Equipment Matrix applicable to the system under discussion.

1.8.4.2. Draft of the Prefunctional Checklists.

1.8.4.3. Current work schedule data pertaining to the beginning, start-up, inspection, and turnover phases anticipated for the particular system.

1.8.4.4. Copy of all approved submittals for the system.

1.8.5. The Contractor shall take minutes of the Preinstallation Meeting(s) and distribute to all attending parties.

1.8.6. Whether required in the Technical Specifications or not, a Preinstallation Meeting(s) shall be conducted for the following Work, if included in the Project:

1.8.6.1. Concrete.

1.8.6.2. Masonry.

1.8.6.3. Large Steel Fabrications.

1.8.6.4. Waterproofing.

1.8.6.5. Roofing.

1.8.6.6. Exterior Glazing (including storefront and curtain wall).

1.8.6.7. Door Hardware.

1.8.6.8. Audio / Visual Equipment.

1.8.6.9. Air Handling Units.

1.8.6.10. Medical Gas Systems.

1.8.6.11. All Other Mechanical and Electrical Systems.

1.9. MOCK-UPS

1.9.1. Before installing portions of the Work requiring mock-ups, Contractor shall build mock-ups for each form of construction and finish required, using materials indicated for the completed Work.

1.9.2. Build mock-ups in location and of size indicated or, if not indicated, as directed by Architect/Engineer. The mock-up may be work in place that is intended to remain, unless otherwise directed by the Owner.

1.9.3. Notify Architect/Engineer and Owner five (5) days in advance of dates, times, and locations of when and where mock-ups will be constructed.

1.9.4. Demonstrate the proposed range of aesthetic effects and workmanship. Demonstrate anticipated repairs in the mock-up, such as for stone veneer.

1.9.5. Obtain Architect/Engineer's and Owner's approval of mock-ups before starting work, fabrication, or construction.

1.9.6. Maintain mock-ups during construction in an undisturbed condition as a standard for judging the completed Work.

1.9.7. Demolish and remove mock-ups when directed by Owner, unless otherwise indicated.

1.9.8. As a minimum, Contractor shall prepare a mock-up for the following Work, if applicable to the Project. Owner may define additional mock-ups at the Pre-bid or Preconstruction Meeting.

1.9.8.1. Exterior wall system to include: substructure, masonry/stone veneer, plaster, architectural concrete and windows.

1.9.8.2. Roof system.

1.9.8.3. Interior laboratory room; utilities serving laboratory casework.

1.9.8.4. Interior patient care and prevention room.

1.9.8.5. Interior wall finishes.

1.9.8.6. Ceramic tile.

1.9.8.7. Finished flooring.

1.9.8.8. Plumbing battery for multiple-use toilet rooms.

1.9.8.9. Medical gas headwalls.

PART 2- PRODUCTS (NOT USED)

PART 3- EXECUTION (NOT USED)

END OF SECTION 01 45 00

SECTION 01 57 23 – TEMPORARY STORM WATER POLLUTION CONTROL

PART 1- GENERAL

1.1 DEFINITIONS

1.1.1 **BMP** – Best Management Practices.

1.1.2 **NOI & NOT** – Notice of Intent and Notice of Termination for TPDES permits.

1.1.3 **SWPPP** – Storm Water Pollution Prevention Plan

1.1.4 **TCEQ –** Texas Commission on Environmental Quality.

1.1.5 **TPDES –** Texas Pollutant Discharge Elimination System

1.1.6 **Large Construction Activities –** Construction activities including clearing, grading and excavating that result in land disturbance of equal to or greater than five (5) acres

1.1.7 **Small Construction Activities -** Construction activities including clearing, grading and excavating that result in land disturbance of equal to or greater than one (1) acre and less than five (5) acres of land.

1.1.8 **MS4 –** Municipal Separate Storm Sewer Systems: The City of Houston is the MS4 operator for MD Anderson's Houston Campus.

1.1.9 **SWQMP –** Storm Water Quality Management Plan

1.1.10 **EH&S** – MD Anderson Cancer Center's Environmental Health and Safety Department

1.2 RELATED DOCUMENTS AND APPLICABLE WORK

1.2.1 The TCEQ TPDES Construction General Permit No. TXR150000, March 5, 2008 and the project SWPPP. This specification requires compliance with all provisions of the TCEQ with regards to the TPDES permit. The TCEQ requirements currently pertain to large construction activities of five (5) acres or more and small construction activities which disturb one (1) to less than five (5) acres.

1.2.2 "The Storm Water Management Handbook for Construction Activities" developed by the City of Houston, Harris County and Harris County Flood Control District. The handbook provides information to engineers and contractors about TCEQ's TPDES General Permit requirements and about the City of Houston Ordinance Chapter 47 Article XII. The Ordinance has established rules to reduce construction-related pollutants in storm water runoff and effectively prohibit non-storm water discharges to the local storm sewer system.

1.2.3 Information to Respondents, Agreement, Uniform General Conditions for University of Texas System Building Construction Contracts (UGC) and Special Conditions shall be carefully read for provisions pertaining to this Work. In the event of conflict, the better quality or greater quantity shall prevail.

1.2.4 The Work described in this Section is applicable to any and all Sections of the Contract Documents. Any and all Work that would disturb the existing Site conditions or present the potential for site run-off shall adhere fully to this Specification Section.

1.2.5 Unless specifically notified to the contrary by the Owner, in writing, all aspects of this specification shall apply to this Project.

1.3 CONTRACTOR RESPONSIBILITIES

1.3.1 This project requires implementation of storm water "Best Management Practices" (BMP) for control devices and monitoring by the Contractor to comply with all provisions of the Storm Water Pollution Prevention Plan (SWPPP) developed for the Project by the licensed civil engineer. The Contractor must fulfill all Texas Pollutant Discharge Elimination System (TPDES) regulatory requirements, including the filing of a NOI and NOT and/or signing and posting of the Site Notices.

1.3.2 The Contractor shall provide signatures of a corporate Officer for the NOI, Site Notice, and NOT and any other forms or applications as required by the TPDES General Permit TXR150000. The Contractor shall also provide delegated authorization to sign reports per 30 TAC 305.128. Individuals conducting site inspections shall be qualified to the satisfaction of the Owner. Documented qualifications shall be included in the SWPPP booklet.

1.3.3 When the Contractor receives the approved SWPPP from the Owner, the Contractor signs the NOI and Site Notice (see Sample form in Part 4 of this Section) and forwards the NOI and Site Notice to the Owner. Two separate $325 application fees (one for the Owner and one for the Contractor) must accompany the NOI. The Owner signs his NOI and sends both NOI's and application fees to TCEQ. The Contractor shall insert a copy of the signed NOI or Site Notice into the SWPPP booklet to be kept at the Project Site. The $325 application fees are not required for Small Construction Sites.

1.3.4 The SWPPP booklet kept at the Project Site shall also contain the following:

1.3.4.1 A letter delegating signature authority to the field personnel for both the Contractor and the Owner.

1.3.4.2 A copy of TPDES permit when received.

1.3.4.3 A copy of the Site Notice (Large Construction Site Notice or Small Construction Site Notice for both the Primary and Secondary Operators).

1.3.5 The Contractor shall review the SWPPP and verify existing conditions at the Site before determining scope of implementation of site controls. Site survey and site plan drawings shall be used for additional reference. The Contractor shall notify the Owner, in advance, of this site review to allow for Owner participation.

1.3.6 The Contractor shall construct a Project SWPPP sign and place it at the main entrance to the Project Site. This sign shall include the NOI and TPDES permit along with the TCEQ TPDES Site Notice. The sign shall be constructed as detailed in the sample SWPPP sign drawing included in Part 4 of this Section.

1.3.7 Contractor shall contact the Owner's Designated Representative from the EH&S department for review of initial site controls in place prior to commencing site-disturbing activities, to ensure that any unusual circumstances or unforeseen site conditions with regard to erosion and sedimentation have been addressed. The Contractor shall complete the SWPPP Project Start-up form (see Sample in Part 4 of this Section)) and review it with the Owner before commencing soil disturbing activities. Both parties shall sign this form when the requirements listed in the SWPPP Project Start-up form have been met.

1.3.8 The Contractor shall provide all material, labor, equipment and services required to implement, maintain and monitor all erosion and sedimentation controls in compliance with the Storm Water Pollution Prevention Plan (SWPPP). All controls implemented by the Contractor shall comply with the Texas Pollutant Discharge Elimination System (TPDES) regulations as issued by the Texas Commission on Environmental Quality (TCEQ) on March 5, 2008. These controls shall remain in operation until project

completion and reestablishment of the Site or longer as directed by the Owner's Designated Representative. The work shall include, but not be limited to the following:

1.3.8.1 All earthwork as required to implement swales, dikes, basins and other excavations for temporary routing of utilities, to protect against erosion or sediment-laden ("polluted") storm water runoff.

1.3.8.2 All structural controls as shown or specified, including silt fences, sediment traps, stabilized construction entrance, subsurface drains, pipe slope drains, inlet/outlet protection, reinforced soil retention, gabions, rock berms, etc.

1.3.8.3 All non-structural controls as shown or specified, including temporary or permanent vegetation, mulching, geotextiles, sod stabilization, preservation of vegetative buffer strips, preservation/protection of existing trees and other mature vegetation.

1.3.8.4 All modifications and revisions to SWPPP necessary to meet changing site conditions and to address new sources of storm water discharges, as the work progresses.

1.3.8.5 All maintenance and repair of structural and non-structural controls in place shall continue until final stabilization is achieved or as directed by the Owner's Designated Representative.

1.3.8.6 Weekly site inspections, as required by the SWPPP, of pollutant sources, including hazardous sources, structural and non-structural controls, and all monitoring of SWPPP revisions and maintenance of inspection records.

1.3.8.7 Removal of all structural and non-structural controls as necessary upon completion, and only after final stabilization is achieved.

1.3.8.8 Filing of Notice of Termination (NOT) with the TECQ within 30 days of final stabilization being achieved, or of another Operator assuming control of the unstabilized portions of the Site.

1.3.8.9 Refer to the SWPPP for additional requirements to ensure compliance with TPDES regulations.

1.3.9 Certain construction activities such as the construction of underground stormwater conveyance and/or structural control systems at a construction site may require a Stormwater Quality Management (SWQ) permit from the City of Houston's Public Works & Engineering Department. The Contractor is responsible for applying for the SWQ permit, renewing the permit on an annual basis, operating and maintaining these systems according to the manufacturer's recommendations and industrial standards. Upon the completion of the construction activities, the Contractor shall transfer the ownership of the SWQ permit and associated documents such as engineering drawings and maintenance record to the owner.

.

1.4 QUALITY ASSURANCE

1.4.1 In order to minimize the discharge of pollutants to storm water, the Contractor shall implement all permanent and temporary Site controls according to Texas Pollutant Discharge Elimination System (TPDES) Guidelines, as set forth by the Texas Commission on Environmental Quality.

1.4.2 Implementation of site controls shall be performed by a qualified contractor experienced in the proper installation of such devices in accordance with manufacturers' specifications, and in keeping with recognized Best Management Practices (BMP's), and in keeping with TPDES regulations. Qualification of installing Contractor shall be reviewed with the Owner prior to entering into a contract with them for services.

1.4.3 The Contractor shall inspect all BMP's at regular intervals as specified in the Storm Water Pollution Prevention Plan for this project. Use standard Owner Inspection forms (see form in Part 4 of this Section) for each inspection. Record all deficiencies of site controls, and take immediate action to correct any deficiencies recorded. Keep records of inspections current and on file, available for review by EPA, TCEQ, MS4 operator and Owner.

1.5 SUBMITTALS

1.5.1 Submittals of products used in structural and non-structural controls shall be made through established procedures for review and approval by the Owner prior to installation on the Site. The Contractor shall make available physical samples and product literature on any material used in structural or non-structural controls during the course of the Project prior to its implementation in the field.

PART 2- PRODUCTS

2.1 MATERIALS

Specific site control devices are identified in the SWPPP. Where such devices are indicated, their material composition shall comply with this Section.

2.1.1 Materials to be used in structural and non-structural site controls shall include, but not be limited to the following:

2.1.1.1 **Silt Fences:** implemented to filter, and remove sediment from storm water shall be composed of the following materials:

a. Geotextile fabric – a non-woven, polypropylene, polyethylene, or polyamide fabric with non- raveling edges. It shall be non-biodegradable, inert to most soil chemicals, ultraviolet resistant, unaffected by moisture and other weather conditions, and permeable to water while retaining sediment. Fabric shall be 36 inches wide, with a minimum weight of 4.5 oz/yd.
b. Posts –steel fence posts shall be made of hot rolled steel, galvanized or painted, a minimum of 4 feet long, with a Y-bar or TEE cross-section of sufficient strength to withstand forces implied.
c. Wire Backing – a galvanized, 2”x4”, welded wire fencing, 12 gauge minimum. Width shall be sufficient to support geotextile fabric 24 inches above adjacent grades. Chain link fences located along the same lines as silt fences, may be use to support geotextile fabric. In this circumstance, the geotextile fabric shall be firmly attached to fence.

2.1.1.2 **Triangular Filter Dikes:** for use on surfaces or in locations where standard silt fence cannot be implemented, shall be composed of the following:

a. Geotextile fabric - a non-woven, polypropylene, polyethylene, or polyamide fabric with non-raveling edges. It shall be non-biodegradable, inert to most soil chemicals, ultraviolet resistant, unaffected by moisture and other weather conditions, and permeable to water while retaining sediment. Fabric shall be 36 inches wide, with a minimum weight of 4.5 oz/yd.
b. Dike Structure - 6 gauge, 6x6 welded wire mesh, 60 inches wide, folded into a triangular form. Each side shall be 18 inches with an overlap of 6 inches.
c. Ties – metal shoat rings or standard wire/cable ties for attachment of wire mesh to itself, and for attachment of geotextile fabric to wire mesh.

2.1.1.3 **Stabilized Construction Exit:** A steel grid that allows the safe passage of vehicles while agitating the tires to loosen and remove the soil build up. The grid or structures shall conform to the following:

a. It shall consist of pipes or tubes spaced such that there is a minimum clear distance between the pipes or tubes of 4 ½ inches. It shall be

elevated above the ground surface a minimum of 8 inches to allow water, debris and soil to drain.

b. Minimum diameter of pipe or tube shall be 3 inches.

c. It shall be designed to support any and all vehicles entering and leaving the construction site.

d. It shall be firmly placed in the ground at the exit.

e. It shall be of sufficient length so that the agitation will remove the soil from the tires or a minimum of 8'-0".

f. At the "street side" approach of the grid there shall be an impervious surface or it shall consist of 3 inch to 5 inch diameter angular crushed stone/rock approximately 5'-0" in length, minimum, and 8 inches deep, minimum. On the "job site" side of the grid, there shall be 3 inch to 5 inch diameter angular crushed stone/rock minimum 15"-0" in length, minimum 8 inches deep, The steel grid will be between the "street side" approach and the job site crushed stone/rock. All crushed stone/rock shall have filter fabric beneath the stone/rock. See diagram on Exhibit F.

g. Steel grid area shall be used as the tire wash area. When tire wash is in use (rainy or muddy days) the area shall be manned and the tires shall be washed using a high pressure hose/nozzle.

h. The area beneath the grid shall be sloped such that debris, soil and water shall be diverted back on to the construction site or to a sediment basin. No water, soil or debris shall leave the construction site. The resulting discharge shall be disposed of properly.

2.1.1.4 **Rock Berms**: shall be composed of the following materials:

a. Rock – clean open graded rock, with a maximum diameter of 3 inches.

b. Wire Mesh Support – a galvanized, woven wire sheathing having a maximum opening size of 1 (one) inch, and a minimum wire diameter of 20 gauge.

b. Ties – metal shoat rings or standard wire/cable ties.

2.1.1.5 Concrete Truck Washout (self installed): shall be used for containment of fluids from concrete truck washout wastes.

a. Gravel bags, concrete blocks or open graded rock

b. 10 mil plastic sheeting

2.1.1.6 Temporary Storage Tanks: shall be used for temporary storage of fuels on the construction Project Site

a. 2 inches of sand on the bottom of the containment area

b. 6 mil plastic sheeting

c. 2 inches of sand on top of the plastic sheeting

2.1.1.7 **Erosion Control Matting**: shall be used on steep slopes, in drainage swales, and in high traffic pedestrian areas of barren soil. It shall include one or more of the following:

a. Jute Mat – a plain fabric made of jute yarn, woven in a loose and simple manner, with a minimum unit weight of 2.7 pounds per square yard. Width shall be as required for the dimensions of the area to be covered.

b. Wood Fiber Mat – a mat composed of wood fibers, which are encased in nylon, cotton or other type of netting.

c. Synthetic Webbing Mat – a mat manufactured from polyvinyl chloride or polypropylene monofilaments, which are bonded together into a three-dimensional web to facilitate erosion control and/or re-vegetation.

2.1.1.8 **Organic Mulches**: shall be used for covering bare soil, retaining moisture under existing vegetation being preserved, and for absorbing the energy of compaction caused by foot or vehicular traffic. Mulch shall be one or more of the following:

a. Straw – from broken straw bales that are free of weed and grass seed where the grass from the seed is not desired vegetation for the area to be protected.
b. Wood Chips – from chipped limbs of cleared trees on site, or delivered in chipped form, in bulk quantities of pine, cedar or cypress. Wood chips of all species shall be partially decomposed to alleviate nitrogen depletion of the soil in areas where existing vegetation is to be preserved and protected.
c. Shredded Mulches – from pine, cypress or cedar, mechanically shredded, and capable of forming an interlocking mat following placement, and after sufficient wetting and drying has taken place naturally.

2.1.1.7 Any other materials indicated in SWPPP.

PART 3- EXECUTION

3.1 GENERAL

3.1.1 The Contractor shall provide a complete installation of all site control devices and measures (BMPs). Indicated in the SWPPP booklet, including the Site Erosion and Sedimentation Control Drawing and as specified herein. These BMPs must be confirmed as fully operational with the Owner before any Work that disturbs the Site can begin.

3.1.2 The Contractor shall provide all inspection and monitoring of controls in place and shall perform all revisions and updating of SWPPP booklet. An accurate, chronological record of all Contractor inspections revisions and additional controls shall be kept on file at the project Site, for review, with a copy of the SWPPP booklet.

3.1.3 The Contractor shall submit their Notice of Termination (NOT) to the TCEQ, with a copy to the Owner, after all disturbed areas are re-established (stabilized) with vegetative cover following completion of construction. Following acceptance of stabilized areas, all site controls that are no longer necessary shall be removed.

3.2 CONTROL DEVICES

Execution of specific site control devices is described in the following paragraphs. Refer to the SWPPP for applicable devices, extent and location.

3.2.1 SILT FENCE

3.2.1.1 Silt fences shall consist of non-woven geotextile fabric, attached to wire fabric backing to support the geotextile. The wire fabric should be galvanized 2” x 4” welded wire, 12-gauge minimum. Attach non-woven geotextile fabric to fence with shoat or standard cable/wire ties, leaving a “toe” of fabric at the bottom of the fence of not less than 6 (six) inches. Steel posts as specified shall be driven to a depth of 1 (one) foot minimum, and spaced not more than 6 (six) feet on center. Tilt posts slightly, in an “uphill” direction for additional strength. Attach fencing to posts with standard cable/wire ties. Dig a 6 (six) inch deep by 6 (six) inch wide trench on the disturbed side of the fence, bury geotextile fabric in trench, backfill and tamp. Abutting ends of geotextile fabric shall be overlapped a minimum of 12 (twelve) inches.

3.2.1.2 Maintain silt fence daily as necessary to repair breaches in geotextile fabric. Maintain steel posts as specified in tilted condition. When siltation has occurred, it shall be

removed when it has reached a depth of 6 (six) inches. Silt that has been removed shall be disposed of off-site.

3.2.1.3 Remove silt fence when the disturbed areas protected by silt fence have been completely stabilized as specified. Minimize site disturbance while removing silt fence and posts.

3.2.2 CURB INLET PROTECTION

3.2.2.1 Cover curb storm inlet with non-woven geotextile fabric covered wire fabric. Wire fabric to be 2"X4" – W1.4XW1.4. Extend fabric 2 (two) feet beyond inlet opening at each end and 12" (twelve) in front of opening in the gutter. Remove strip of filter fabric apx. 2 1/2" (two and one half) high for the length of the protection to act as overflow. Extend fabric over the top of opening to allow placement of gravel bags. Anchor fabric with 20 lb. gravel bags placed 3 (three) feet on center.

3.2.2.2 Maintain inlet protection daily as necessary to repair breaches in geotextile fabric. When siltation has occurred, it shall be removed when it has reached a depth of 2 (two) inches. Silt that has been removed shall be disposed of off-site.

3.2.3 STABILIZED CONSTRUCTION EXIT

3.2.3.1 A steel grid that allows the safe passage of vehicles while agitating the tires to loosen and remove the soil build-up. The grid or structures shall conform to the following:

a. It shall consist of pipes or tubes spaced such that there is a minimum clear distance between the pipes or tubes of 4-½ inches. It shall be elevated above the ground surface a minimum of 8 inches to allow water, debris and soil to drain.
b. Minimum diameter of pipe or tube shall be 3 inches.
c. It shall be designed to support any and all vehicles entering and leaving the construction site.
d. It shall be firmly placed in the ground at the exit.
e. It shall be of sufficient length so that the agitation will remove the soil from the tires or a minimum of 8'-0".
f. At the "street side" approach of the grid there shall be an impervious surface or it shall consist of 3 to 5 inch diameter angular crushed stone/rock approximately 5'-0" in length, minimum, and 8 inches deep, minimum. On the "job site" side of the grid, there shall be 3 to 5 inch diameter angular crushed stone/rock 15'-0" in length, minimum 8 inches deep. The steel grid will be between the "street side" approach and the job site crushed stone/rock. All crushed stone/rock shall have filter fabric beneath the stone/rock. See diagram on Exhibit F.
g. Steel grid area shall be used as the tire wash area. When tire wash is in use (rainy or muddy days) the area shall be manned and the tires shall be washed using a high pressure hose/nozzle.
h. The area beneath the grid shall be sloped such that debris, soil and water shall be diverted back on to the construction site or to a sediment basin. No water, soil or debris shall leave the construction site. The resulting discharge shall be disposed of properly.

3.2.4 ROCK BERM

3.2.4.1 Rock berm shall consist of rip-rap type rock, secured within wire sheathing as specified, and installed at the toe of slopes, or at the perimeter of developing or disturbed areas. Height of berm shall be a minimum of 18 (eighteen) inches from top of berm to uphill toe of berm. Top width shall be a minimum of 24 (twenty four) inches, with side slopes of 2:1 or flatter. Uphill toe of berm shall be buried a minimum of 4 (four) inches into existing grade. Rock berm shall have a minimum flow-through rate of 60 (sixty) gallons per minute, per square foot of berm face.

3.2.4.2 Maintain rock berm in a condition that allows the sediment to be removed, when the depth of sediment has reached 1/3 (one third) the height of the berm. Berm shall be reshaped as needed, and silt buildup removed, to maintain specified flow through berm.

3.2.4.3 Rock berm shall be removed when the disturbed areas served have been stabilized as specified.

3.2.5 CONCRETE TRUCK WASHOUT (SELF INSTALLED)

3.2.5.1 Concrete Truck Washout (self installed) shall be constructed so that it will be able to accommodate the maximum number of anticipated concrete trucks that will be cleaned on any given day at any given time using 7 gallons of water being used for washout per truck or 50 gallons of water being used to wash out pump trucks. The area utilized to contain the wash water and concrete solids cleaned from the trucks will be a minimum of 10 feet in width. The containment area will be covered with 10 mil plastic sheeting without any holes or tears and the seams shall be sealed according to manufacturer's recommendations. The gravel bags, concrete blocks or open graded rocks shall line the outside perimeter and shall be double wrapped with the 10 mil plastic sheeting to prevent any potential for runoff from the containment area.

3.2.5.2 The concrete truck washout containment area shall be maintained in a condition that will not allow concrete build up within the containment area to exceed 50 percent of the storage capacity.

3.2.5.3 Washout of concrete trucks during rainfall events shall be minimized.

3.2.5.4 If a SWPPP is required to be implemented, the SWPPP shall include concrete washout areas on the associated map.

3.2.5.5 The concrete truck washout area will be removed when it is no longer necessary to wash out concrete trucks on the site.

3.2.6 TEMPORARY STORAGE TANKS

3.2.6.1 Must be located in a bermed containment area. The berm must be a minimum 3 feet in all directions, and the height of the berm must contain the maximum contents of the largest tank plus 8 inches (approximately 110 percent of the tank capacity). The containment area is constructed by beginning with a 2 inch sand pad, and then covered with 6 mil plastic or rubber sheeting. The sheeting is then covered with another 2 inch layer of sand. The plastic sheeting is secured to the outer berm.

3.2.6.2 Storage tanks are to be placed no closer than 50 feet from a building or property line.

3.2.6.3 If using tanks with a gravity feed type set up, the containment must be of sufficient size to be able to contain the tank if it should fall over.

3.2.6.4 There must be a fusible link at the valve that will shut off the flow to the hose in the event of a fire.

3.2.6.5 There must be sufficient cover for the tank and the containment area to prevent potential stormwater runoff.

3.2.6.6 The area within the containment area is to be kept free and clear of spills, if a spill occurs then the sand is to be removed and replace with a fresh layer of sand.

3.2.6.7 The storage tank containment area is to be removed from the site once it has been determined that it will no longer be used on the construction site.

3.2.7 DIVERSION DIKE

3.2.7.1 Diversion dikes shall be formed and shaped using compacted fill, and shall not intercept runoff from more than 10 (ten) acres. Dike shall have a minimum top width of 24 (twenty

four) inches, and a minimum height of 18 (eighteen) inches. Soil shall have side slopes of 3:1 or flatter, and shall be placed in 8 (eight) inch lifts. Compact soil to 95 percent standard proctor density. Where protected slopes exceed 2 (two) percent, the uphill side of diversion dike shall be stabilized with crushed stone or erosion control matting – to a distance of not less than 7 (seven) feet from toe of dike. The channel, which is formed by the diversion dike, must have positive drainage for its entire length to a stabilized outlet, such as a rock berm, sandbag berm, or stone outlet structure. Storm water shall not be allowed to overflow the top of diversion dike at any point other than the stabilized outlet.

3.2.7.2 Maintain diversion dike in a condition that allows the storm water runoff to be diverted away from exposed slopes. Repair any failures at top of dike and remove sediment as necessary behind dike to allow positive drainage to a stabilized outlet.

3.2.7.3 Remove diversion dike when the expose slopes being protected are stabilized with vegetation or other permanent cover.

3.2.8 INTERCEPTOR SWALE

3.2.8.1 Interceptor swale shall be implemented to prevent on or off-site storm water from entering a disturbed area, or prevent sediment-laden runoff from leaving the Site or disturbed area. Interceptor swale shall be excavated as required by the SWPPP drawing/s, with side slopes of 3:1 or flatter. This shall include all labor and equipment associated with the installation and maintenance of the swale as shown on the construction documents. Constructed swale may be v-shaped or trapezoidal with a flat bottom, depending on the volume of water being channeled. Sediment laden runoff from swale shall be directed to a stabilized outlet or sediment-trapping device. Flow line of swale shall have a continuous fall for its entire length and shall not be allowed to overflow at any other point/s along its length.

3.2.8.2 Maintain interceptor swale in a condition that allows the storm water runoff to be channeled away from disturbed areas. Remove sediment in swale as necessary to maintain positive drainage to a stabilized outlet.

3.2.8.3 Fill in or remove swale after the disturbed area/s being protected are completely stabilized as specified.

3.2.9 EROSION CONTROL MATTING

3.2.9.1 Remove all rocks, debris, dirt clods, roots, and any other obstructions, which would prevent the matting from lying in direct contact with the soil. 6 inch by 6 inch anchor trenches shall be dug along the entire perimeter of the installation. Bury matting in trenches, backfill and compact. Fasten matting to the soil using 10 gauge wire staples, 6 inches in length and 1 inch wide. Use a minimum of one staple per 4 square feet of matting, and at 12 inches on center along all edges. Install parallel to flow of water and overlap joining strips a minimum of 12 inches.

3.2.9.2 Maintain erosion control matting by repairing any bare spots. Missing or loosened matting shall be promptly replaced or re-anchored.

3.2.9.3 Remove matting where protection is no longer required. In areas where permanent vegetation is established along with matting, matting can be left in place permanently.

3.2.10 MULCHES

3.2.10.1 Apply specified mulches in areas identified on the SWPPP, to a depth of 3 inches or as otherwise specified on the SWPPP drawing/s.

3.2.11 BPM DETAILS

3.2.11.1 Refer to Exhibits at the end of this Specification for the following BMP details:

3.2.6.1.1 Exhibit “A” Area Inlet Detail

3.2.6.1.2 Exhibit “B” Curb Inlet Detail

3.2.6.1.3 Exhibit “C” Rock Berm Detail
3.2.6.1.4 Exhibit “D” Silt Fence Detail
3.2.6.1.5 Exhibit “E” Triangular Dike Detail
3.2.6.1.6 Exhibit “F” Stabilized Construction Exit
3.2.6.1.7 Exhibit “G” Concrete Truck Washout

3.3 INSPECTIONS AND RECORD KEEPING

3.3.1 Contractor shall inspect all BMP’s on 7-day intervals and within 24-hours at the end of a major storm event totaling 0.5 inches of rainfall or greater, with the Owner’s Designated Representative, who is also required by TPDES to regularly inspect the site. Use standard Owner Inspection forms (see form in Part 4 of this Section) for each inspection. Record all deficiencies of site controls, and take appropriate action to correct any deficiencies recorded. Exception is rock berms located in a streambed. Any rock berm located in a streambed shall be inspected on a daily basis. Keep records of inspections current and on file, available for review by EPA, TCEQ, MS4 operator Representative and/or Owner’s Representative/s.

3.3.2 Contractor shall keep records of all Contractor inspections on file with SWPPP booklet at the Project Site, and make available for review by Owner’s Representative(s) or EPA, TCEQ or MS4 operator officials requesting review of SWPPP inspection records. One copy of each inspection report shall be delivered to the Owner’s Designated Representative.

3.3.3 Contractor shall keep records of all major grading and stabilization activities on file with the SWPPP booklet at the project site and make available for review by owner’s representative(s), EPA, TCEQ, or MS4 operator officials requesting review of the SWPPP.

3.3.4 Contractor shall submit copies of all inspection records and the Major Grading and Stabilization Log along with SWPPP booklet, to the Owner’s Designated Representative at project completion.

3.4 MAINTENANCE

3.4.1 All erosion and sediment control measures and other protective measures identified in the SWPPP must be maintained in effective operating condition. If through inspections the permittee determines that BMP’s are not operating effectively, maintenance must be performed before the next anticipated storm event or as necessary to maintain the continued effectiveness of storm water controls.

3.4.2 If maintenance prior to the next anticipated storm event is impracticable, maintenance must be scheduled and accomplished as soon as practicable. Erosion and sediment controls that have been intentionally disabled, run-over, removed or otherwise rendered ineffective must be replaced or corrected immediately upon discovery.

PART 4- SAMPLE FORMS

4.1 The Contractor shall use the following forms or sketches in the execution of the work in this Section, in compliance with TPDES requirements and the SWPPP. Contact the Owner’s representative for useable copies of the Owner-furnished forms:

- City of Houston forms (weblink -- http://cleanwaterways.org/downloads/)
- MD Anderson Cancer Center SWPPP Project Start-up Form
- MD Anderson Cancer Center SWPPP Inspection Form (Template)
- Major Grading and Stabilization Activities Log

- SWPPP Posting Sign for Main Construction Entrance for large construction site (5 acres or greater)
- SWPPP Posting Sign for Main Construction Entrance for small construction site (1 to less than 5 acres)

4.2 Retrieve the most current TCEQ forms directly from the TCEQ website:

http://www.tceq.state.tx.us/permitting/water_quality/stormwater/TXR15_5_plus_steps.html

- TCEQ TPDES Notice of Intent (NOI) (weblink - http://www.tceq.state.tx.us/assets/public/permitting/waterquality/forms/20022.pdf)

- TCEQ TPDES Large Construction Site Notice (weblink -- http://www.tceq.state.tx.us/assets/public/permitting/waterquality/attachments/stormwater/txr15largepri.pdf)

- TCEQ TPDES Small Construction Site Notice (weblink -- http://www.tceq.state.tx.us/assets/public/permitting/waterquality/attachments/stormwater/txr15smallsite.pdf)

- TCEQ TPDES Notice of Termination (NOT) (weblink -- http://www.tceq.state.tx.us/assets/public/permitting/waterquality/forms/20023.pdf)

END OF SECTION 01 57 23

MD Anderson Cancer Center
Facilities Planning Design and Construction
1515 Holcombe Boulevard Mail Box 703, Houston, Texas 77030
(713) 792--2207 FAX (713) 796-9935

SWPPP Project Start-up

Contractors must meet four (4) TPDES requirements before soil-disturbing activities can commence on Owner construction projects. This form provides the Contractor and Owner an acceptance of compliance with initial BMP's and required paperwork for commencement of work on the project site.

The Contractor is to initial items that are certified as complete and then review for concurrence with the Owner's Designated Representative.

1 **Best Management Practices (BMP's) applicable to this project have been inspected to ensure correct placement in accordance with the SWPPP and for proper installation according to specifications.**

_____ _____
Initial by Contractor *Initial by Owner*

2 **The approved Storm Water Pollution Prevention Plan (SWPPP) is approved and on site.**

_____ _____
Initial by Contractor *Initial by Owner*

3 **The TCEQ NOI and Site Notice forms (and permits if received) or the TCEQ CSN's are complete and posted for all permittees at the main entrance to the project site.**

_____ _____
Initial by Contractor *Initial by Owner*

4 **Inspector qualifications and letter of delegation of authority are inserted in the SWPPP.**

_____ _____
Initial by Contractor *Initial by Owner*

Having met the above requirements and in recognition of prior receipt of Notice to Proceed, the Contractor is authorized to commence work on site.

_____ CPM Project #_____
Contractor

_____ Date: _____
Owner's Designated Representative

MD Anderson Cancer Center
Facilities Planning Design and Construction
1515 Holcombe Boulevard Mail Box 703, Houston, Texas 77030
(713) 792--2207 FAX (713) 796-9935

SWPPP Inspection Report

Project Name: _____ **CPM Project #:** _____

Contractor: _____ **Date of Inspection:** _____

Inspection Conducted by: _____ _____

Printed Name ***Signature***

Qualifications of the Inspector: _____

Report prepared by: *(Circle One)* **Contractor** **Owner**

Inspection Issue	**Y**	**N**	**N/A**	**Comments**
Are TPDES NOI's, permits, or CSN's for all permittees posted at the construction entrance?				
Is contact information for all permittees posted at the construction entrance?				
Are copies of inspection reports for all permittees included with the SWPPP?				
Is a copy of the NOI, TPDES Permit and Posting Notice or CSN for all permittees included with SWPPP?				
If the BMP's have been modified, has the SWPPP been modified?				
Is the major grading and stabilization activities log current				
Are there any signs of discharge leaving the site?				
Are all BMP's functioning as intended?				
Any additional BMP's required?				
Are stabilized entrances/exits preventing street contamination?				
Are any BMP's in need of repair and/or maintenance?				
Are any hazardous materials being exposed to storm water runoff?				

Inspection Issue	Y	N	N/A	Comments
Have there been any reportable spills of hazardous materials?				
Have all areas of the site not covered by impervious materials achieved the required coverage?				
Are all soil-disturbing activities complete?				
Has a Notice of Termination (NOT) been filed?				

NOTE: All items of non-compliance shall be repaired/installed within seven (7) calendar days of inspection. Repairs/installation shall be completed immediately, if storm conditions are imminent.

Note incidents of non-compliance:_____

_____

_____

_____

_____

_____

"I certify under penalty of law that this document and all attachments were prepared under my direction or supervision in accordance with a system designed to ensure that qualified personnel properly gathered and evaluated the information submitted. Based on my inquiry of the person or persons who manage the system, or those persons directly responsible for gathering the information, the information submitted is, to the best of my knowledge and belief, true, accurate, and complete. I am aware that there are significant penalties for submitting false information, including the possibility of fine and imprisonment for knowing violations."

Signature: _____ Date: _____

Printed Name: _____

Title: _____

MD Anderson Cancer Center
Facilities Planning Design and Construction
1515 Holcombe Boulevard Mail Box 703, Houston, Texas 77030
(713) 792--2207 FAX (713) 796-9935

Storm Water Pollution Prevention Plan
Major Grading and Stabilization Activities Log

Start Date	End Date*	Type and Location of Activity

***End Date does not pertain to stabilization activities**

S W P P P

NOI

PERMIT

SITE NOTICE

MINIMUM SIGN SPECIFICATIONS: 5 Acre or Greater Sites

SIGN:	**Exterior grade ¾ inch plywood, cut 4' x 4', with red painted letters, background painted white – DISPLAY ON CONSTRUCTION FENCE AT MAIN ENTRANCE TO PROJECT SITE.**
S W P P:	**10 inch painted letters, 3 inches from top of sign, centered**
CONTRACTOR OWNER:	**3 inch painted letters, 4 inches below SWPPP letters, centered on each half of sign**
NOI, PERMIT, CONTACT:	**8-1/2 X 11 TCEQ forms, laminated beyond edges of documents, stapled to plywood.**

S W P P P

SITE NOTICE

MINIMUM SIGN SPECIFICATIONS:	**1 to Less Than 5 Acre Sites**
SIGN:	**Exterior grade ¾ inch plywood, cut 4' x 4', with red painted letters, background painted white – DISPLAY ON CONSTRUCTION FENCE AT MAIN ENTRANCE TO PROJECT SITE.**
S W P P P:	**10 inch painted letters, 3 inches from top of sign, centered**
CONTRACTOR OWNER:	**3 inch painted letters, 4 inches below SWPPP letters, centered on each half of sign**
CONSTRUCTION SITE NOTICE:	**8-1/2 X 11 TCEQ forms, laminated beyond edges of documents, stapled to plywood.**

EXHIBIT "A"
Area Inlet Detail

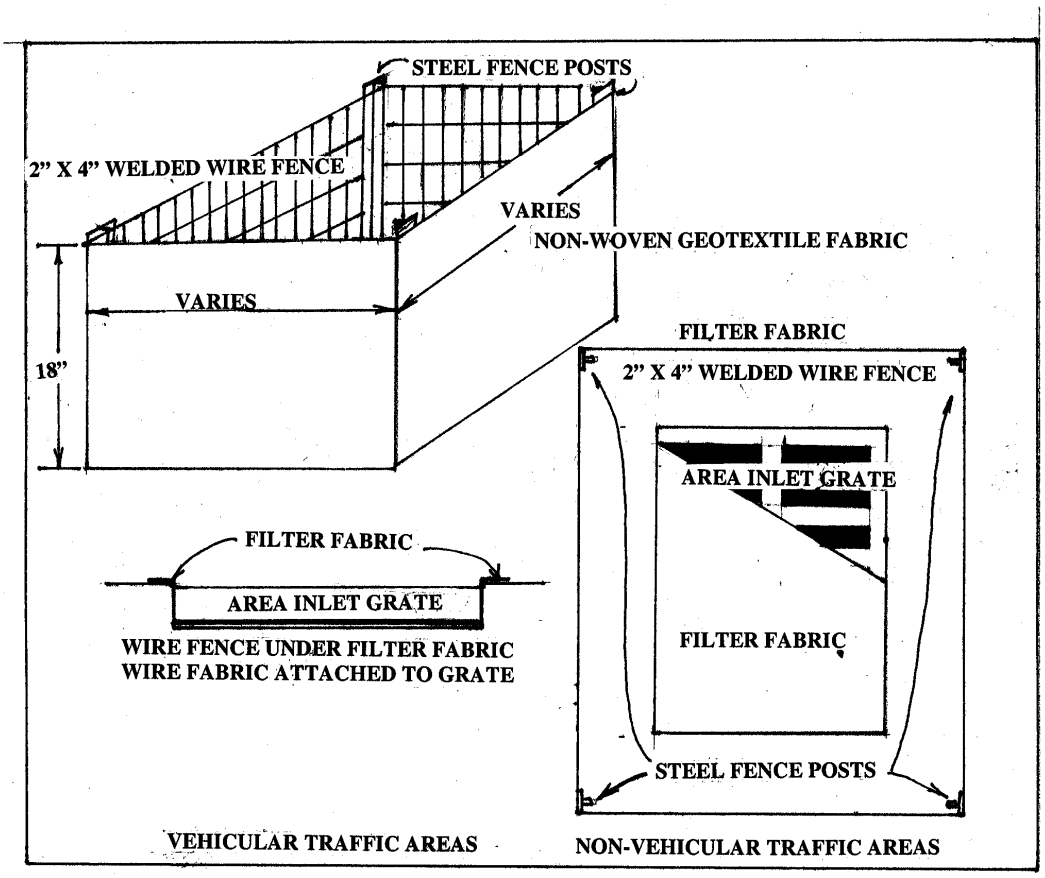

AREA INLET PROTECTION

1. STEEL POSTS THAT SUPPORT THE SILT FENCE SHALL BE INSTALLED AT EACH CORNER AND IN BETWEEN CORNERS IF THE DISTANCE IS GREATER THAN 6' BETWEEN CORNER POSTS.

2. USE SILT FENCE DETAIL FOR INSTALLATION OF THE SILT FENCE AROUND THE AREA INLET.

3. THE METAL AREA INLET GRATE SHALL BE LIFTED AND FILTER FABRIC WRAPPED AROUND THE GRATE AND THE GRATE SHALL BE REPLACED.

4. IN VEHICULAR TRAFFIC AREAS THE METAL GRATE SHALL BE LIFTED OUT AND WIRE FENCE MATERIAL SHALL BE PLACED UNDER IT WITH FILTER FABRIC PLACED BETWEEN THE GRATE AND THE WIRE FENCE. THE WIRE FENCE SHALL THEN BE ATTACHED TO THE GRATE .

5. ACCUMULATED SILT SHALL BE REMOVED WHEN THE FILTER FABRIC OVER THE GRATE COMPLETELY COVERS THE GRATE AREA, AND THE SILT AROUND THE SILT FENCE REACHES A HEIGHT OF 6"

6. AREA INLET PROTECTION SHALL BE REMOVED WHEN THE SITE IS COMPLETELY STABILIZED.

EXHIBIT "B"
Curb Inlet Detail

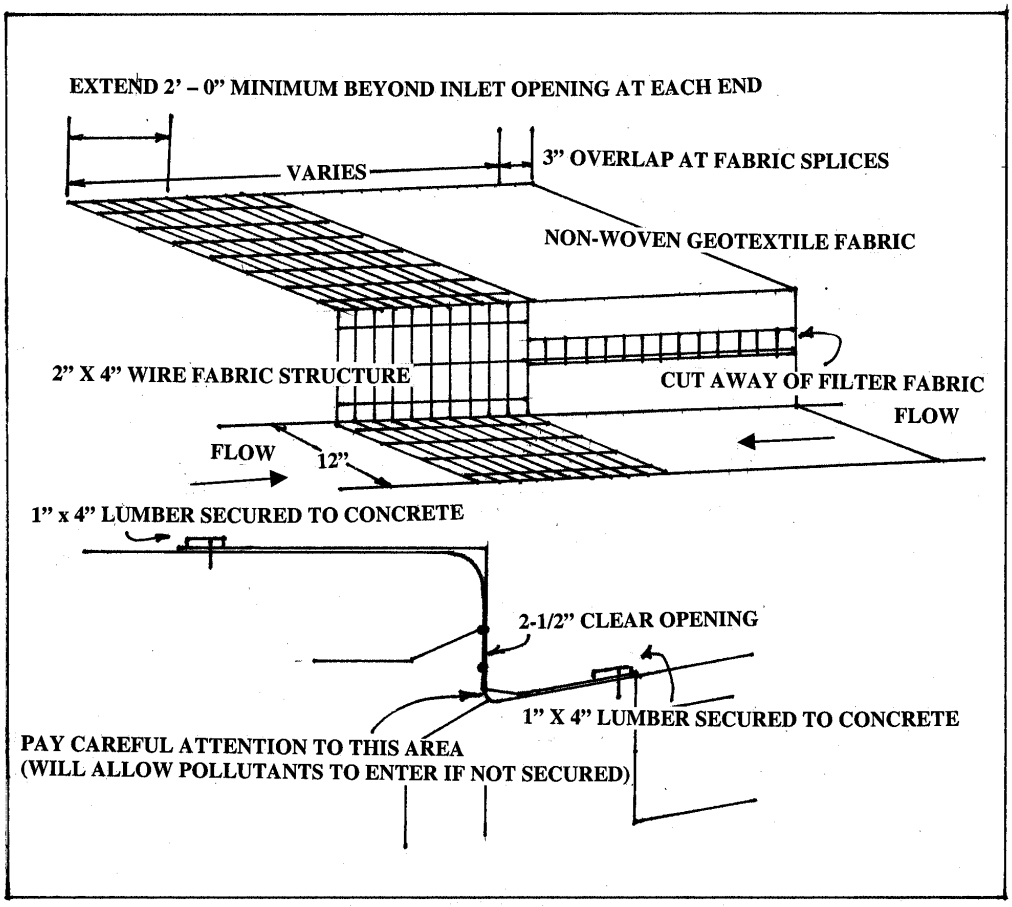

CURB INLET PROTECTION

1. WHERE MINIMUM CLEARANCES CAUSE TRAFFIC TO DRIVE IN THE GUTTER, USE 1" X 4" LUMBER SECURED WITH CONCRETE NAILS 3' O.C. NAILED INTO THE CONCRETE. IF PEDESTRIAN TRAFFIC ONLY THE USE OF 20# GRAVEL BAGS TO SECURE MATERIAL IS PERMITTED.
2. AS SECTION OF FILTER FABRIC SHALL BE REMOVED AS SHOWN IN THIS DETAIL. FABRIC MUST BE SECURED TO WIRE BACKING WITH CLIPS OR HOG RINGS AT THIS LOCATION.
3. DAILY INSPECTION SHALL BE MADE AND SILT ACCUMULATION MUST BE REMOVED WHEN DEPTH REACHES 2".
4. THE PERFORMANCE OF THE INLET PROTECTION SHALL BE MONITORED DURING EACH RAINFALL EVENT AND PROTECTION SHALL BE IMMEDIATELY REMOVED IF THE STORMWATER BEGINS TO OVERTOP THE CURB.
5. INLET PROTECTION SHALL BE REMOVED AS SOON AS THE SOURCE OF SEDIMENT IS STABILIZED.

EXHIBIT "C"
Rock Berm Detail

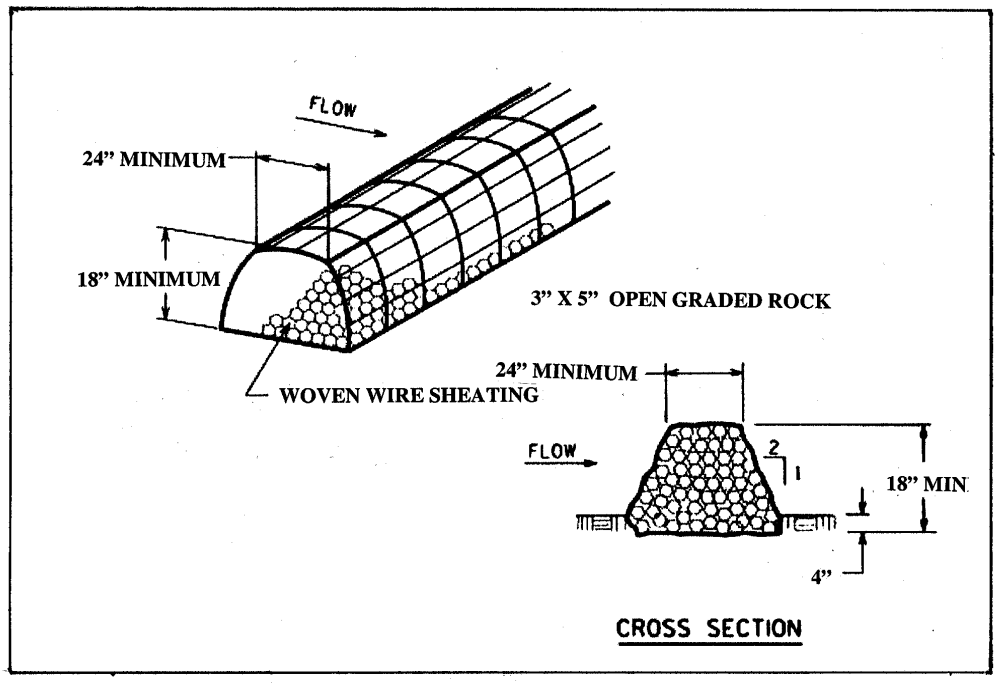

ROCK BERM

1. USE ONLY OPEN GRADED ROCK (4" X 8") FOR STREAM FLOW CONDITIONS. USE OPEN GRADED ROCK (3" X 5") FOR OTHER CONDITIONS

2. THE ROCK BERM SHALL BE SECURED WITH A WOVEN WIRE SHEATHING HAVING A MAXIMUM 1" OPENING AND A MINIMUM WIRE DIAMETER OF 20 GA. ROCK BERMS IN CHANNEL APPLICATIONS SHALL BE ANCHORED FIRMLY INTO THE SUBSTRATE A MINIMUM OF 6" WITH TEE POSTS OR WITH #5 OR #6 REBAR, WITH A MAXIMUM SPACING OF 48" ON CENTER.

3. THE ROCK BERM SHALL BE INSPECTED WEEKLY AND THE STONE AND/OR FABRIC CORE-WOVEN SHEATHING SHALL BE REPLACED WHEN THE STRUCTURE CEASES TO FUNCTION AS INTENDED; DUE TO SILT ACCUMULATION AMONG THE ROCKS, WASHOUT, CONSTRUCTION TRAFFIC, ETC.

4. WHEN SILT REACHES A DEPTH EQUAL TO ONE-THIRD THE HEIGHT OF THE BERM OR 6" WHICHEVER IS LESS, THE SILT SHALL BE REMOVED AND DISPOSED OF ON AN APPROVED SITE AND IN A MANNER THAT WILL NOT CREATE A SILTRATION PROBLEM.

5. DAILY INSPECTION SHALL BE MADE ON SEVERE-SERVICE ROCK BERMS; SILT SHALL BE REMOVED WHEN ACCUMLUATION REACHES 6"

6. WHEN THE SITE IS COMPLETELY STABILIZED, THE ROCK BERM AND ACCUMULATED SILT SHALL BE REMOVED AND DISPOSED OF IN AN APPROVED MANNER.

EXHIBIT "D"
Silt Fence Detail

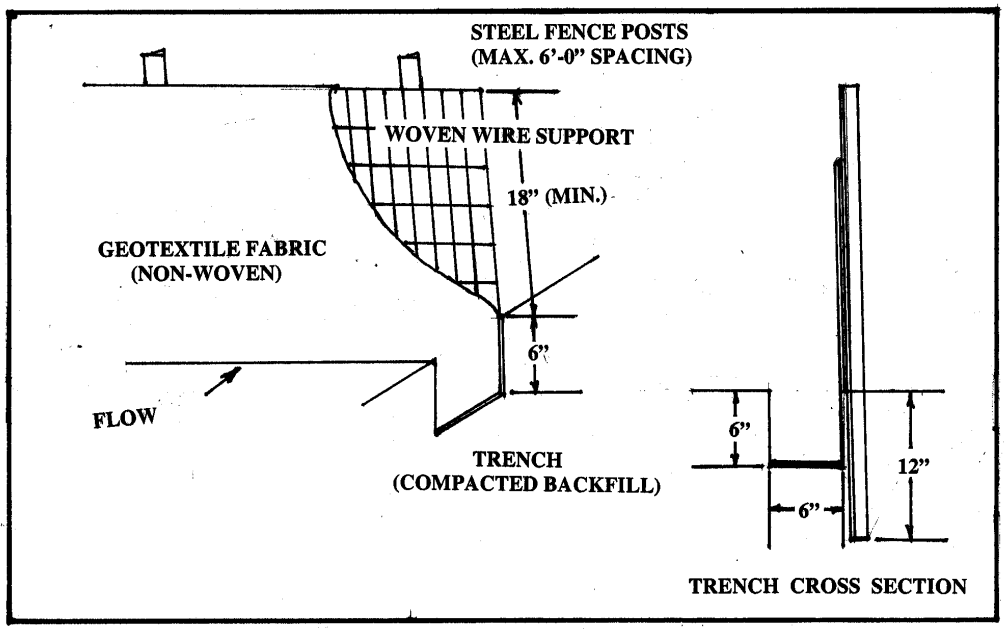

SILT FENCE DETAIL

1. STEEL POSTS WHICH SUPPORT THE SILT FENCE SHALL BE INSTALLED ON A SLIGHT ANGLE TOWARD THE ANTICIPATED RUNOFF SOURCE. POSTS MUST BE EMBEDDED A MINIMUM OF 12"

2. THE TOE OF THE SILT FENCE SHALL BE TRENCHED IN WITH A SPADE OR MECHANICAL TRENCHER, SO THAT THE DOWNSLOPE FACE OF THE TRENCH IS FLAT AND PERPENDICULAR TO THE LINE OF THE FLOW. WHERE FENCE CAN NOT BE TRENCHED INTO THE SURFACE (e. g. PAVEMENT) THE FABRIC SHALL BE WEIGHTED DOWN WITH ROCK OR 1" X 4" LUMBER SECURELY FASTENED TO THE SURFACE, ON THE UPSTREAM SIDE TO PREVENT FLOW UNDER THE FENCE.

3. THE TRENCH MUST BE A MINIMUM OF 6" DEEP AND 6" WIDE TO ALLOW FOR THE FILTER FABRIC TO BE LAID IN THE GROUND AND BACKFILLED WITH COMPACTED MATERIAL.

4. THE FILTER FABRIC SHALL BE SECURELY FASTENED TO THE WOVEN WIRE BACKING, WHICH IN TURN IS SECURELY FASTENED TO THE STEEL FENCE POST.

5. ACCUMLUTATED SILT SHALL BE REMOVED WHEN IT REACHES A DEPTH OF 6". THE SILT SHALL BE DISPOSED OF ON AN APPROVED SITE AND IN SUCH A MANNER THAT WILL NOT CONTRIBUTE TO ADDITIONAL SILTRATION.

6. INSPECTION SHALL BE MADE WEEKLY AND REPAIR OR REPLACEMENT SHALL BE MADE PROMPTLY, IF NEEDED.

7. SILT FENCE SHALL BE REMOVED WHEN THE SITE IS COMPLETELY STABILIZED.

EXHIBIT "E"
Triangular Dike Detail

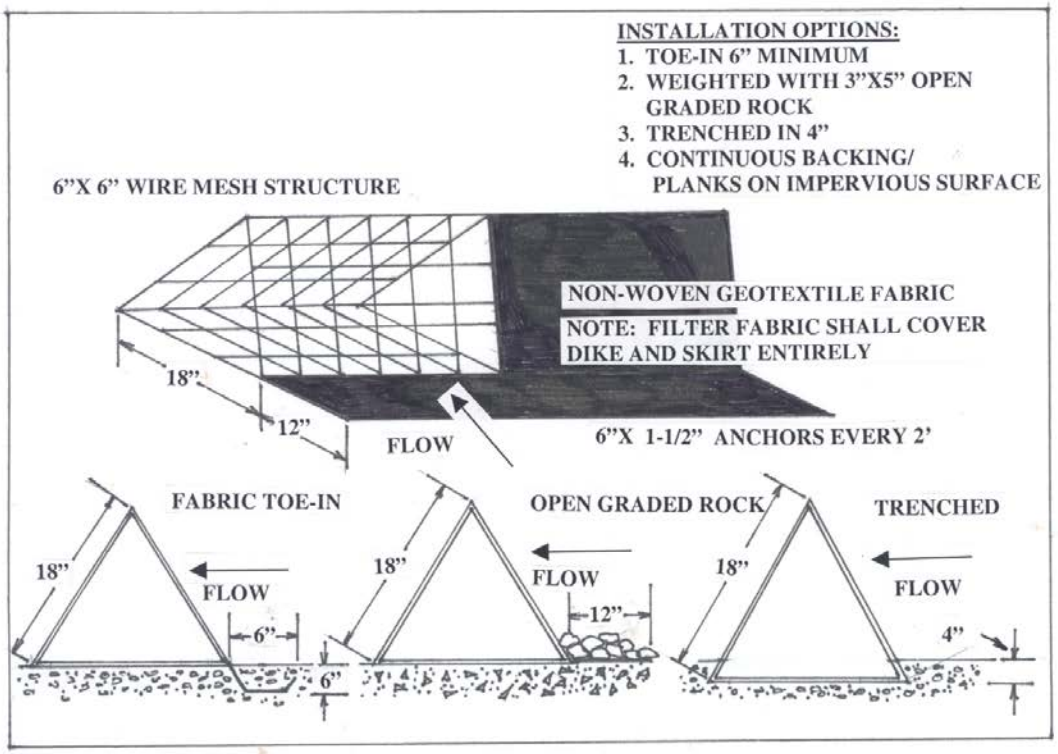

TRI DIKE FILTER DAM

1. DIKES SHALL BE PLACED IN A ROW WITH ENDS TIGHTLY ABUTTING THE ADJACENT DIKE.
2. THE FABRIC COVER AND SKIRT SHALL BE A CONTINUOUS WRAPPING OF NON-WOVEN GEOTEXTILE. THE SKIRT SHALL BE A CONTINUOUS EXTENSION OF THE FABRIC ON THE UPSTREAM FACE.
3. THE SKIRT SHALL BE WEIGHTED WITH A CONTINUOUS LAYER OF 3" X 5" OPEN GRADED ROCK, 1" X 4" LUMBER (SECURELY FASTENED), OR TOED IN 6" WITH MECHANICALLY COMPACTED MATERIAL. OTHERWISE, SHALL BE TRENCED IN 4" IN DEPTH.
4. DIKES AND SKIRT SHALL BE SECURELY ANCHORED IN PLACE USING 6" WIRE STAPLES ON 2' CENTERS ON BOTH EDGES OF SKIRT, OR STAKE USING 3/8" REBAR WITH TEE ENDS.
5. FILTER MATERIAL SHALL BE LAPPED OVER ENDS 6" TO COVER DIKE TO DIKE JOINTS. JOINTS SHALL BE FASTEN WITH GALVANIZED SHOAT RINGS.
6. THE DIKE STRUCTURE SHALL BE 6 GA. 6"X 6" WIRE MESH, 18" ON A SIDE.
7. ACCUMULATED SILT SHALL BE REMOVED WHEN IT REACHES A DEPTH OF 6" AND DISPOSED OF IN A MANNER WHICH WILL NOT CAUSE ADDITIONAL SILTRATION.
8. INSPECTION SHALL BE MADE WEEKLY AND REPAIR OR REPLACEMENT SHALL BE MADE PROMPTLY AS NEEDED.
9. AFTER THE SITE IS COMPLETELY STABILIZED, THE DIKES AND ANY REMAINING SILT SHALL BE REMOVED.

EXHIBIT "F"
Stabilized Construction Exit

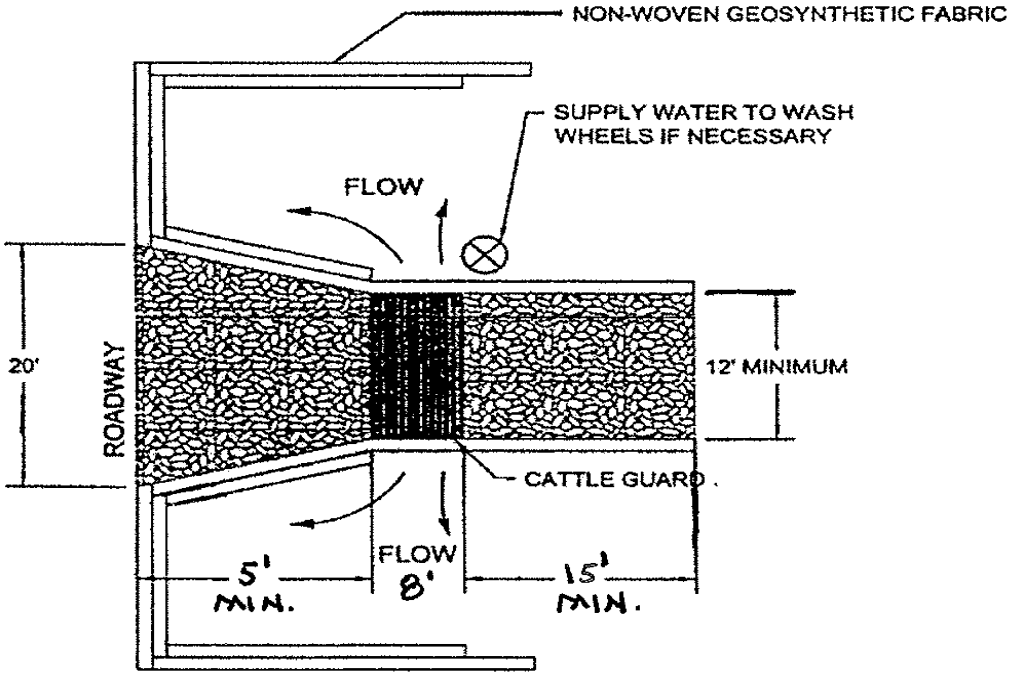

A steel grid that allows the safe passage of vehicles while agitating the tires to loosen and remove the soil build up. The grid or structures shall conform to the following:

1. IT SHALL CONSIST OF PIPES OR TUBES SPACED SUCH THAT THERE IS A MINIMUM CLEAR DISTANCE BETWEEN THE PIPES OR TUBES OF 4 ½". IT SHALL BE ELEVATED ABOVE THE GROUND SURFACE A MINIMUM OF 8" TO ALLOW WATER, DEBRIS AND SOIL TO DRAIN.
2. MINIMUM DIAMETER OF PIPE OR TUBE SHALL BE 3".
3. IT SHALL BE DESIGNED TO SUPPORT ANY AND ALL VEHICLES ENTERING AND LEAVING THE CONSTRUCTION SITE.
4. IT SHALL BE FIRMLY PLACED IN THE GROUND AT THE EXIT.
5. IT SHALL BE OF SUFFICIENT LENGTH SO THAT THE AGITATION WILL REMOVE THE SOIL FROM THE TIRES OR A MINIMUM OF 8'-0".
6. AT THE "STREET SIDE" APPROACH OF THE GRID THERE SHALL BE AN IMPERVIOUS SURFACE OR IT SHALL CONSIST OF 3" TO 5" DIAMETER ANGULAR CRUSHED STONE/ROCK APPROXIMATELY 5'-0" IN LENGTH, MINIMUM, AND 8" DEEP, MINIMUM. ON THE "JOB SITE" SIDE OF THE GRID, THERE SHALL BE 3" TO 5" DIAMETER ANGULAR CRUSHED STONE/ROCK 15"-0" IN LENGTH, MINIMUM, 8" DEEP, MINIMUM. THE STEEL GRID WILL BE BETWEEN THE "STREET SIDE" APPROACH AND THE JOB SITE CRUSHED STONE/ROCK. ALL CRUSHED STONE/ROCK SHALL HAVE FILTER FABRIC BENEATH THE STONE/ROCK.
7. STEEL GRID AREA SHALL BE USED AS THE TIRE WASH AREA. WHEN TIRE WASH IS IN USE (RAINY OR MUDDY DAYS) THE AREA SHALL BE MANNED AND THE TIRES SHALL BE WASHED USING A HIGH PRESSURE HOSE/NOZZLE.
8. THE AREA BENEATH THE GRID SHALL BE SLOPED SUCH THAT DEBRIS, SOIL AND WATER SHALL BE DIVERTED BACK ON TO THE CONSTRUCTION SITE OR TO A SEDIMENT BASIN. NO WATER, SOIL OR DEBRIS SHALL LEAVE THE CONSTRUCTION SITE. THE RESULTING DISCHARGE SHALL BE DISPOSED OF PROPERLY.

EXHIBIT "G"
Concrete truck washout

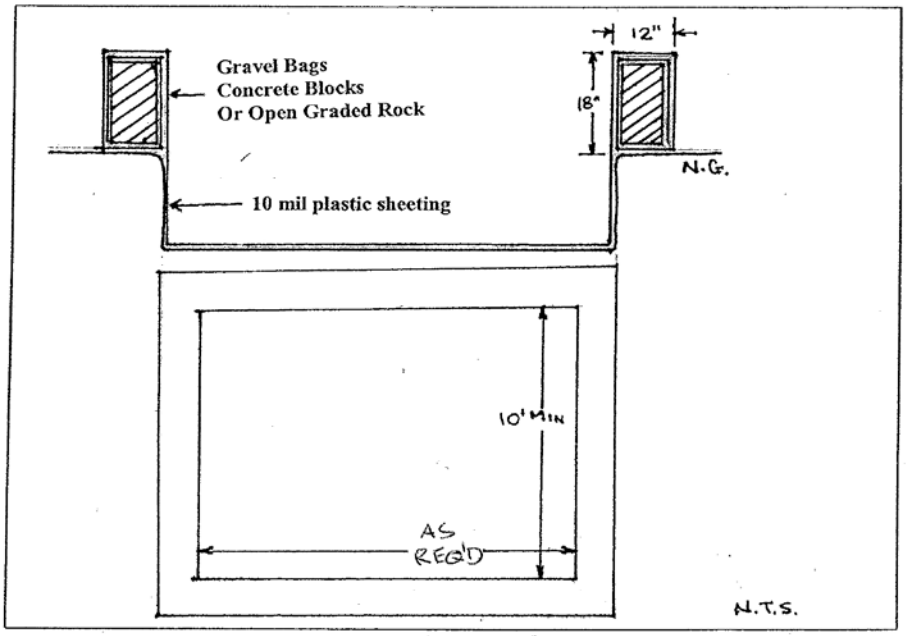

Alternative Self-installed Construction Site Concrete Truck Washout

1. **The excavation for the concrete truck washout shall be a minimum of 10' wide and of sufficient length and depth to accommodate 7 gallons of washout water and concrete per truck per day and/or 50 gallons of washout water and concrete per pump truck per day.**
2. **In the event that the self-installed concrete truck washout is constructed above ground, it shall be 10' wide and 10' long with the same requirements for containment as described in item 1.**
3. **The containment area shall be lined with 10 mil plastic sheeting, without holes or tears. Where there are seams, these shall be secured according to manufacturers directions.**
4. **The plastic sheeting shall be of sufficient size so that it will overlap the top of the containment area and be wrapped around the gravel bags, concrete blocks or open graded rock at least 2 times.**
5. **The gravel bags or concrete blocks shall be placed abutting each other to form a continuous berm around the outer perimeter of the containment area.**
6. **The berm consisting of gravel bags, concrete blocks or open graded rock shall be no less than 18" high and no less than 12" wide.**
7. **The containment area shall not exceed 50% of capacity at any one time.**
8. **Solids shall be removed from containment area and disposed of properly and any damage to the plastic sheeting shall be repaired or sheeting replaced before next use.**

SECTION 01 57 25 – DUST CONTROL PLAN

PART 1 - GENERAL

1.01 RELATED DOCUMENTS

A. Drawings and general provisions of the Contract, including General Conditions and Division 01 Specification Sections, apply to this Section.

B. Specifications throughout all Divisions of the Project Manual are directly applicable to this Section, and this Section is directly applicable to them.

1.02 SUMMARY

A. Perform all Work required to prevent and control dust in accordance with all applicable Federal, State, and local laws and regulations concerning the prevention and control of dust pollution.

B. Contractor furnish all the labor, equipment, materials, and means required, and carry out proper and efficient measures wherever and as often as necessary to reduce the dust nuisance to persons, and to prevent damage by dust originating from operations to vehicles, buildings, existing vegetation or any other properties. Contractor shall be liable for any damage resulting from dust originating from operations during this Project.

C. Contractor shall prepare a Dust Control Plan, as described within this Section, for Owner review and approval.

1.03 REFERENCE STANDARDS

A. The latest published edition of a reference shall be applicable to this Project unless identified by a specific edition date.

B. All reference amendments adopted prior to the effective date of this Contract shall be applicable to this Project.

C. The Contractor shall be responsible at all times for compliance with applicable laws and regulations pertaining to dust control and opacity monitoring at the Site, including but not limited to those contained in Title 30 of the Texas Administrative Code (TAC), Chapter 111 (30 TAC §111.111, 30 TAC §111.143, 30 TAC §111.145, 30 TAC §111.147, and 30 TAC §111.149), as hereafter amended.

1.04 QUALITY ASSURANCE

A. In addition to providing the Dust Control Plan, the Contractor shall provide for Owner review a copy of the daily check list on which Contractor Representatives will document the performance of the activities contained in the Dust Control Plan.

PART 2 - PRODUCTS

2.01 DUST CONTROL PLAN

A. Prior to beginning construction, the Contractor shall provide a written Dust Control Plan to the Owner for review.

B. Dust Control Plan shall include, but not be limited to, a description of the control processes that the Contractor will implement in order to address the following:

1. How grading operations will be handled/suspended when winds exceed 30 miles per hour.

2. How water will be applied to all surfaces prior to, and if necessary during, excavation.

3. How water or a covering will be applied to all particulate materials contained in open-bodied trucks, trailers or other vehicles transporting particulate matter prior to operation of the vehicle, in order to prevent dust from becoming airborne during transportation.

4. How water or a covering will be applied to all stockpiles of particulate material to prevent dust from becoming airborne during high windy conditions.

5. How transfer processes involving free fall of soil or other particulate matter will be performed in order to minimize free fall distance and thus reduce dust emissions.

6. How and when water will be applied to unpaved surfaces, including commercial roads, or any other surface that can create airborne dust in order adequately to control dust emissions.

7. How and when ground cover on the construction site will be reestablished prior to final occupancy.

8. The designated routes within the job site that will be used by vehicles transporting soil or other materials to and from the site.

9. How soil, sand, dirt and any other particulate matter will be removed from vehicle tires and undercarriages prior to leaving the site, in order to prevent trackout on the adjacent public roads.

10. The maximum speed limit on unpaved roads through the site, and how and where speed limit signs will be posted along the haul road routes so that they are visible to vehicles entering and leaving the site.

11. How and when soil, sand and other particulate material deposited or emitted onto any public thoroughfare near construction will be removed.

12. How dust control systems and/or devices, including; but not limited to water application systems, filter replacement, or daily removal of excess dust from containment areas, will be maintained.

PART 3 - EXECUTION

3.01 DOCUMENT AVAILABILITY

A. The Contractor shall make the Dust Control Plan and the Daily Dust Control Checklist available at the job site for periodic review, inspection and copying by Owner's representatives, regulatory agencies including but not limited to EPA and TCEQ, and other persons legally permitted to review them.

END OF SECTION 01 57 25

SECTION 01 77 00 - PROJECT CLOSE-OUT PROCEDURES

PART 1 - GENERAL

1.1. RELATED DOCUMENTS

1.1.1. The Contractor's attention is specifically directed, but not limited, to the Uniform General Conditions for University of Texas System Building Construction Contracts (UGC) for other requirements.

1.2. SUMMARY

1.2.1. The following Project Close-Out procedures are addressed in this Section:

1.2.1.1. Requirements for Substantial Completion

1.2.1.2. Provisions for Release of Retainage

1.2.1.3. Requirements for Final Acceptance

1.2.1.4. Requirements for Record Submittals and Samples

1.2.1.5. Requirements for Operating and Maintenance Manuals

1.2.1.6. Requirements for Commissioning and Close-out Manual

1.2.1.7. Requirements for Close-Out Document Submission

1.2.1.8. Project Cleaning

1.3. DEFINITIONS

1.3.1. The term “Project Close-Out” is hereby defined to include requirements near the end of the Contract Time, in preparation for Substantial Completion acceptance, occupancy by Owner, release of retainage, final acceptance, Final Payment, and similar actions evidencing completion of the Work. Specific additional requirements for individual units of work are specified in the Technical Specifications.

1.3.2. The term “Time” of Close-Out is directly related to completion and acceptance, and therefore may be either a single time period for the entire Project, or a series of time periods for individual portions or phases of the Project that have been certified as substantially complete at different dates.

1.3.3. Refer to the UGC for Definitions used throughout the Contract Documents.

1.4. REQUIREMENTS FOR SUBSTANTIAL COMPLETION

1.4.1. In addition to items identified in the UGC, prior to requesting a Substantial Completion inspection (for either the entire Work or portions thereof as agreed to by the Owner and Contractor), Contractor shall complete and/or submit the following to the Owner and list known exceptions in the request.

1.4.1.1. Contractor’s Application for Payment that is coincident with the period of time anticipated for Substantial Completion shall reflect a minimum of 95% completion for all applicable Work.

1.4.1.2. Owner's acceptance of all building system installations. If Owner's Construction Inspectors are assigned to the Project, acceptance may be in the form of building system final inspection reports.

1.4.1.3. Record Documents: Up-to-date, marked-up drawings and specifications that record all changes made during construction.

1.4.1.4. Record Submittals and Samples.

1.4.1.5. Operating and Maintenance Manual(s). Provide with warranty letters that coincident with the anticipated date for Substantial Completion.

1.4.1.6. Commissioning and Close-out Manual.

1.4.1.7. Completed Punchlists.

1.4.1.8. Certification statement that no asbestos containing materials have been used or incorporated into the Project perTexas Asbestos Health Protection Rules (TAHPR—Tex. Admin. Code Title 25, Part 1, Ch. 295C, Asbestos Health Protection.

1.4.1.9. Releases enabling Owner's full and unrestricted use of the Project and access to services and utilities, including (where applicable) operating certificates, and similar releases.

1.4.1.10. Deliver tools, spare parts, extra stock of materials, Samples, and similar physical items to Owner.

1.4.2. If Owner intends to occupy Project upon Substantial Completion acceptance, Contractor shall make provisions for final changeover of locks with the Owner's personnel. Upon written directive from Owner and for the convenience of the Contractor in completing Punchlist activity, Owner may waive the final changeover of locks until final acceptance.

1.4.3. Contractor shall complete instructing and training Owner's personnel for all systems and equipment serving the areas claimed as substantially complete, for which Owner training was not completed in association with system demonstrations and inspections. Refer also to Section 01 79 00 – Demonstration and Training.

1.4.4. Contractor shall complete the initial clean-up requirements as described in Part 3 of this Section for the entire portion of the Project claimed as substantially complete. Contractor shall touch-up and otherwise repair and restore marred exposed finishes.

1.4.5. SUBSTANTIAL COMPLETION INSPECTION PROCEDURE

1.4.5.1. Refer to the UGC and Section 01 45 00 – Project Quality Control.

1.4.5.2. The Contractor shall ensure the Work is ready for inspection and/or reinspection. If the Work is found not to be as stated in the Contractor's Punchlist or the items have not been substantially corrected and/or completed, the inspection will be terminated. All costs incurred by the Owner and Architect/Engineer for scheduling and attending the terminated inspection(s) shall be the responsibility of the Contractor and excluded from the Cost of Work.

1.5. PROVISIONS FOR RELEASE OF RETAINAGE

1.5.1. Refer to the UGC.

1.5.2. Release of any retainage, or reduction in amount of retainage withheld, is strictly at the discretion of the Owner, regardless of Contractor compliance with requirements. All of the requirements noted for Substantial Completion acceptance must be completed prior to application for final release of Contract retainage. In addition, Contractor shall meet the following requirements:

1.5.2.1. Submit affidavits of final release of claim and lien from each subcontractor and supplier who provided materials and/or labor to the Project.

1.5.2.2. Submit affidavit that all bills for the Project have been paid, or will be paid within thirty (30) days of Contractor's receipt of payment.

1.5.2.3. Submit Consent of Surety to Release of Retainage.

1.6. REQUIREMENTS FOR FINAL ACCEPTANCE

1.6.1. In addition to items identified in the UGC, prior to requesting a Final Completion inspection (for either the entire Work or portions thereof as agreed to by the Owner and Contractor), Contractor shall complete and/or submit the following to the Owner and list known exceptions in the request:

1.6.1.1. Draft Application for Final Payment showing 100% completion for each line item on the Schedule of Values. Contractor must submit with this draft, the final releases and supporting documentation not previously submitted and accepted. Contractor must include Certificates of Insurance when applicable. The Final Payment, including final release of retainage, will not be released until all Work (including Punchlist items) has been completed, all requirements met, a Project Close-Out audit performed (if deemed necessary) and a Final Change Order has been processed if required to resolve final cost or close-out audit issues, including deletion of any remaining Contract allowances.

1.6.1.2. Copy of Architect/Engineer's Substantial Completion Punchlist including evidence that each item has been completed or otherwise resolved.

1.6.1.3. Final meter readings for utilities, and similar data as of time of Substantial Completion or when Owner took possession of and responsibility for corresponding elements of the Work.

1.6.1.4. Final Record Documents see specification 01 78 39, Completed Commissioning and Close-Out Manual, acknowledging receipt of all attic stock, training/demonstration, test reports, and any other requirements of the Contract Documents.

1.6.1.5. Complete final cleaning requirements including touch-up of marred surfaces.

1.6.1.6. Evidence of final and continuing insurance coverage complying with applicable insurance requirements.

1.6.2. FINAL ACCEPTANCE INSPECTION PROCEDURE

1.6.2.1. When the Contractor has completed the Work required in the Final Completion inspection Punchlist and has complied with the Close-Out requirements in this Section and elsewhere in the Contract Documents, then the Contractor shall provide a minimum of ten (10) days written notice to the Architect/Engineer and Owner that the Project is ready for a final acceptance inspection for Final Completion. Refer to the UGC for additional requirements.

1.6.2.2. All Owner and Architect/Engineer costs for travel and time for additional inspections at either Substantial Completion or Final Acceptance which are required either by failure of the Contractor to complete the noted Punchlist items, or by erroneous notices that the Work is ready for such inspections, shall be the responsibility of the Contractor. Owner may issue a unilateral deductive Change Order for these costs.

1.6.3. FINAL PAYMENT REQUEST

1.6.3.1. Contractor shall submit the following documentation with the Application for Final Payment:

1.6.3.1.1. Final Release of Liens and Claims.

1.6.3.1.2. Affidavit of Payment of Debts and Claims.

1.6.3.1.3. Consent of Surety.

1.6.3.1.4. Completed SWPPP Documents and Notice of Termination.

1.6.3.1.5. Final Historically Underutilized Business Plan.

1.6.3.1.6. Completed and Signed Notice of Termination.

1.6.3.1.7. Signed Final Completion Certificate.

PART 2- PRODUCTS

2.1. REQUIREMENTS FOR RECORD SAMPLES

2.1.1. RECORD SAMPLES

2.1.1.1. Prior to date(s) of Substantial Completion, Contractor shall arrange for Architect/Engineer and Owner's representative to meet with Contractor at the Site to determine which (if any) of the submitted Samples or mock-ups maintained by Contractor during progress of the Work are to be transmitted to Owner for record purposes.

2.1.1.2. Contractor shall comply with Architect/Engineer's and/or Owner’s instructions for packaging, identification marking, and delivery to Owner's designated location at the Site or other location as directed by Owner.

2.1.1.2.1. Furnish two (2) binders of all record finishes Samples, bound in heavy-duty, 3-ring vinyl-covered binders including pocket folders for any folded sheet information. Binder content shall be divided with plastic-covered tabs for each section of each binder. Provide labels to identify binder content on both the front and spine of each binder.

2.1.1.2.2. Samples shall be mounted to paper or heavy stock depending on type of sample, organized by finish type, with the following information: Type, Manufacturer, Product Number, Finish/Color, Description, Installed Location.

2.1.1.2.3. Finishes Samples include, but are not limited to, the following as applicable to the Work: tile, VCT, terrazzo, stone, sheet vinyl, carpet, base, wall coverings, laminates, solid surface materials, decorative glass, paint, and wood.

2.1.1.3. Contractor shall dispose of other Samples in the manner specified for disposal of surplus and waste materials, unless otherwise indicated or directed by Architect/Engineer and/or Owner.

2.2. REQUIREMENTS FOR OPERATING AND MAINTENANCE MANUALS

2.2.1. Within thirty (30) days of the Notice to Proceed with Construction, Contractor shall submit to Owner the proposed format, content and organizational structure for Operating and Maintenance Manuals for Owner's review and approval. The organizational structure shall follow Owner's format for maintenance management; confirm structure with Owner.

2.2.2. Contractor shall make revisions and corrections to format and content as reasonably requested by Owner. After the Owner approves the proposed format, content, and organizational structure, Contractor shall create the file structure and update Operating and Maintenance Manual content as the Work progresses.

2.2.3. Product submittals, owner's manuals, manufacturer's printed instructions, parts lists, and other submittals required by other Sections of the Specifications shall be included in the Operating and Maintenance Manuals provided that they are approved and are formatted in a manner consistent with the requirements of this Section.

2.2.4. Test data and commissioning data included in the Operating and Maintenance Manuals need not be duplicated in the Commissioning and Close-Out Manual and vice versa. Test data not pertaining to a particular device or piece of equipment (such as domestic water pipe pressure test reports) must be inserted in the Commissioning and Close-Out Manual.

2.2.4.1. Equipment is defined as any mechanism, mechanical, electrical or electronic device, or any combination thereof, which is made up of two (2) or more working parts to perform a particular function.

2.2.4.2. When an item of equipment is a packaged unit furnished by one manufacturer and the package as furnished contains proprietary items of equipment obtained from other sources, Contractor shall include copies of equipment data for each item of such equipment as if each item of equipment had been separately furnished.

2.2.5. Manufacturers' standard printed data shall include only sheets pertinent to the product or component installed. Mark each sheet to identify each product or component incorporated into the Work. Prepare supplementary text if manufacturers' standard printed data are not available and where the information is necessary for proper operation and maintenance of equipment or systems.

2.2.6. Refer to individual Technical Specification Sections for additional operating and maintenance requirements.

2.2.7. Examples of equipment, material, and systems for which operating and maintenance data is required includes, but is not limited to, the following:

Architectural / Miscellaneous	**HVAC / Plumbing**	**Electrical / Life Safety**
Doors and Windows	Piping, Valves, and Fittings	Cable, Wire, and Connectors, 600 Volt
Overhead Coiling Doors and Grilles	Motors	Wiring Devices
Automatic Door Openers	Fire Protection Systems	Motor Control Centers
Door Hardware	Plumbing Equipment	Distribution Panelboards
Wall Coverings	Plumbing Specialties	Panelboards
Paint	Liquid Nitrogen System	Emergency Generator

Architectural / Miscellaneous	HVAC / Plumbing	Electrical / Life Safety
		Paralleling Switchgear
Floor Coverings and Base	Gas Systems	Packaged Engine Generator Systems
Stone and Terrazzo	Fuel Oil Systems	Automatic Transfer Switches
Tile	Reverse Osmosis System	Standby Power Generator Switchgear
Acoustical Ceiling Tile	Hydronic Specialties	Fuses
Decorative Glass	Steam and Steam Condensate Specialties	Switchgear
Access Flooring	HVAC Pumps	Power Factor Correction Equipment
Demountable Partitions	Chemical Treatment Systems	Transformers
Folding Operable Partitions	Chillers	Busway – 600 Volt and Below
Loading Dock Equipment	Boilers	Surge Protective Devices
Laboratory Casework	DX Air-Conditioning Systems	Motor Starters
Fume Hoods	Heat Exchangers	Power Status and Monitoring System
Biological Safety Cabinets	Humidifiers	Lighting Fixtures
Environmental Rooms	Terminal Heat Transfer Units	Lighting Control Systems
Sterilizers, Washers and Dryers	Modular Air Handling Units	UPS Equipment
Audio-Visual Equipment	Custom Air Handling Units	Fire Alarm System
Window Treatment	Fans	Communication Systems
Radiation Protection	Filters	Security System
Conveying Systems	Ductwork	
Irrigation Systems	Air Terminal Units	
Window Washing Systems	Air Outlets and Inlets	
Pneumatic Tube Systems	Variable Speed Drives	
	Building Automation System	

2.2.8. OPERATING AND MAINTENANCE DATA

2.2.8.1. Contractor shall furnish the following equipment data content to be Included in Operating and Maintenance Manuals:

2.2.8.1.1. Description of Equipment. Completed Equipment Matrix; refer to the Equipment Matrix requirements of Section 01 91 00 – General Commissioning Requirements.

2.2.8.1.2. Record Product Submittals. Clearly identify all options and accessories of actual installed product and variations in the actual Work in comparison with submitted information.

2.2.8.1.3. Parts List. Clearly identify every part in the item of equipment with the proper manufacturer's name, part nomenclature and number, local source, and list price.

2.2.8.1.4. Recommended Spare Parts List. For each equipment item that Owner will likely need within a 12-month period to support and operate that item of equipment. The quantities of spare parts recommended must be based upon the quantity of like equipment items installed under the Contract Documents.

2.2.8.1.5. Normal Operating Instructions. Detailed information to permit a journeyman mechanic to adjust, start-up, operate, and shut down the equipment. Special start-up precautions shall be noted as well as other action items required before the equipment is put into service.

2.2.8.1.6. Emergency Operating Procedures. Detailed description of the sequence of action to be taken in the event of a malfunction of the unit, either to permit a short period of continued operation or emergency shutdown to prevent further damage to the unit and to the system in which it is installed.

2.2.8.1.7. Preventive Maintenance. Detailed information to cover routine and special inspection requirements, including but not limited to, field adjustments, inspections for wear, adjustment changes, packing wear, lubrication points, frequency and specific lubrication type required, cleaning of the unit and type solvent to use, and such other measures as are applicable to preventive maintenance program.

2.2.8.1.8. Calibration. Detailed data on what to calibrate, how to calibrate, when to calibrate and procedures to enable checking the equipment for reliability or indications as well as data for test equipment, special tools and the location of test points.

2.2.8.1.9. Scale and Corrosion Control. Detailed information covering the prevention of and removal of scale and corrosion.

2.2.8.1.10. Trouble Shooting Procedures. Detailed information and procedures for detecting and isolating malfunctions and detailed information concerning probable causes and applicable remedies.

2.2.8.1.11. Removal and Installation Instructions. Detailed information concerning the logical sequence of steps required to remove and install the item including instructions for the use of special tools and equipment.

2.2.8.1.12. Disassembly and Assembly Instructions. Detailed illustrations and text to show the logical procedure and provide the instructions necessary to disassemble and assemble the unit properly. The text shall include all checks and special precautions as well as the use of special tools and equipment required to perform the assembly or disassembly.

2.2.8.1.13. Repair Instructions. Detailed repair procedures to bring the equipment up to the required operating standard including instruction for examining equipment and parts for needed repairs and adjustments, and tests or inspections required to determine whether old parts may be reused or must be replaced.

2.2.8.1.14. Special Tools and Test Equipment. Detailed list of the special tools and test equipment needed to perform repair and maintenance for each equipment item. The list shall contain the special tool and test equipment part number, size, quantity, price, manufacturer's name and address, and local supplier's name and address.

2.2.8.1.15. System Drawings. Contractor shall furnish detailed drawings, where applicable, that clearly show wiring diagrams, utility service diagrams, control diagrams, system schematics, pneumatic and fluid flow diagrams, etc., which pertain to the unit function. System drawings must show major pieces of equipment, such as chillers, boilers, heat exchangers, pumps, air handlers, tanks, switchgear, etc., as meaningful to the Project. Fluid flow and direction and valves with their valve tag identification numbers must be clearly noted on drawings. Drawings must show modifications to another manufacturer's standard unit when it is incorporated into the assembly or package unit.

2.2.9. WARRANTIES AND GUARANTEES

2.2.9.1. Contractor shall include, within the Operating and Maintenance Manual organizational structure for each system, equipment item, or material, an executed copy of the specified warranty/guarantee with warranty effective dates covering that particular system, equipment item, or material. Contractor shall include the manufacturer's warranty as specified and the installing subcontractor's and supplier's guarantee for workmanship and system operation.

2.3. REQUIREMENTS FOR COMMISSIONING AND CLOSE-OUT MANUAL

2.3.1. The Contractor shall incorporate all Commissioning and Close-Out documentation and/or verification documents not included in the Operating and Maintenance Manuals, into a separate Commissioning and Close-Out Manual for transmittal to the Owner at the conclusion of the Project. The Commissioning and Close-Out Manual is intended to be a consolidation of documentation/verification for the Project commissioning and close-out process. Update the Commissioning and Close-Out Manual throughout the Project, so that the documentation process can be expedited and monitored.

2.3.2. The Owner may provide a preliminary handbook with sample forms for use by the Contractor in development of the Commissioning and Close-Out Manual. Each Project may require the Contractor to revise and/or create forms for Project specific equipment. The Contractor shall review each form for approval with the Owner before using the Contractor's form.

2.3.3. The Commissioning and Close-Out Manual is not intended to impose duplication of Close-Out Documents. Those items and/or data that are incorporated into the Operating and Maintenance Manuals need not be included in the Commissioning and Close-Out Manual.

2.3.4. The Commissioning and Close-Out Manual shall include, but is not limited to, the following.

2.3.4.1. Commissioning documentation as described in Section 01 91 00 - General Commissioning Requirements.

2.3.4.2. Final air balance reports produced by the Test, Adjust, and Balance Firm.

2.3.4.3. Completed Valve Schedule and Fire, Fire/Smoke and Smoke Damper Schedule per Specification Section 20 05 53.

2.3.4.4. Owner Demonstration / Training Reports: Contractor shall furnish Training Plan and documentation of Owner's personnel training regarding operation of systems per Section 01 79 00 – Demonstration and Training and Technical Specification Sections. Contractor shall include identification of parties receiving training and date(s) of such training.

2.3.4.5. Paint/Finish Schedule: All paints, flooring, finishes, door hardware, used on the Project. Provide manufacturer, model number, color formula, location on Project,

purchase source, and any other information helpful to the Owner's maintenance personnel.

2.3.4.6. Extra Materials and Keys Checklists: Extra Materials shall be referenced to the Owner's Mainsaver Asset Number.

2.3.4.7. Elevator Checklist.

2.3.4.8. Electrical Test Reports (including factory tests and settings).

2.3.4.9. Miscellaneous Equipment Test Reports (including factory tests and settings).

2.3.4.10. HVAC Calibration Reports (including duct testing reports).

2.3.4.11. Fire Alarm Test Reports.

2.3.4.12. Piping Test Reports.

2.3.4.13. Sewer Video Log.

2.3.4.14. Code-required Certifications as described within Technical Specifications.

2.3.4.15. Material Safety Data Sheets (MSDS) for any and all products incorporated into the Project.

2.3.4.16. Miscellaneous Close-out Documents. Contractor shall provide categories of requirements resulting in miscellaneous work records including, but not be limited to, the following:

2.3.4.16.1. Required field records on excavations, foundations, underground construction, wells and similar work.

2.3.4.16.2. Accurate survey showing locations and elevations of underground lines, including invert elevations of drainage piping.

2.3.4.16.3. Surveys establishing lines and levels of building.

2.3.4.16.4. Planting material treatment records (wood, soil, etc).

2.3.4.16.5. Certifications received in lieu of labels on products and similar record documentation.

2.3.4.16.6. Concrete batch mixing and bulk delivery records.

2.3.4.16.7. Testing and qualification of tradesmen.

2.3.4.16.8. Documented qualification of installation firms.

2.3.4.16.9. Materials testing reports.

2.3.4.16.10. Final inspection Punchlist and deficiency corrections.

2.3.4.17. All original, signed Project warranties and guarantees.

PART 3- EXECUTION

3.1. REQUIREMENTS FOR CLOSE-OUT DOCUMENT SUBMISSION

3.1.1.1. Verify that all pages on every document have been scanned. All documents shall be scanned with optical character recognition (OCR) technology. Review each page to ensure that the scan captures original detail. If images appear too dark or too light, or smudged, rescan the page to ensure proper image quality and legibility. Color charts or other documents where color is required to convey full information shall be scanned in color.

3.2. PROJECT CLEANING AT SUBSTANTIAL COMPLETION

3.2.1. The Contractor shall maintain the Project and the Site in a clean and orderly condition throughout the course of construction. In addition to continuous Project cleaning, the following requirements are related to Project Close-Out. Special cleaning for specific units of Work may also be specified in other Sections of Project Specifications.

3.2.2. Contractor shall perform an initial cleaning of the Work consisting of cleaning each surface or unit of Work to normal "clean" condition expected for a first-class building cleaning and maintenance program.

3.2.3. Contractor shall comply with manufacturer's instructions for cleaning of all system components, equipment, and materials incorporated into the Project.

3.2.4. Contractor shall perform the following "initial" final cleaning immediately prior to the time the Contractor requests Substantial Completion inspection.

3.2.4.1. Remove labels that are not required as permanent labels.

3.2.4.2. Clean, according to manufacturer’s recommendations, exposed hard-surfaced finishes, including glass, metals, stone, concrete, painted surfaces, plastics, tile, wood, special coatings, and similar surfaces, to a dirt-free condition, free of dust, stains, films and similar noticeable distracting substances. Restore reflective surfaces to original condition.

3.2.4.3. Remove debris and surface dust from limited-access spaces including plenums, shafts, and similar spaces.

3.2.4.4. Clean concrete floors in non-occupied spaces, wet-mop and broom clean.

3.2.4.5. Clean fixtures of all dust and debris. Replace lamps in accordance with Technical Specifications after final Project cleaning.

3.2.4.6. Remove crates, cartons and other flammable waste materials or trash from the Site. Provide Owner with a finished Project that is free of concealed garbage, trash and rodent infestation. If concealed garbage, trash and rodent infestation are revealed, or odors from them occur, Contractor shall remove and correct at the Contractor’s expense. Restore property to its original condition where no improvements are shown.

3.2.4.7. Clean spaces such as elevator shafts, equipment rooms, pipe and duct chases, furred spaces, and other similar unfurnished space to leave free from rubbish, loose plaster, mortar drippings, extraneous construction materials, dirt, and dust.

3.2.4.8. Remove rubbish by way of chutes, taken down on hoists, or lowered in receptacles. Contractor shall not remove rubbish or waste by dropping or throwing from one level to another within or outside the building(s).

3.2.5. Contractor shall not mark, soil or otherwise deface finished surfaces. If Contractor marks, soils, or otherwise defaces finished surfaces, Contractor shall bear all costs for cleaning and restoring such surfaces to their originally intended condition.

3.3. PROJECT CLEANING AT FINAL ACCEPTANCE

3.3.1. Contractor shall complete the following "final" cleaning immediately prior requesting a Final Completion inspection:

3.3.1.1. Clean transparent materials, including mirrors and window/door glass, to a polished condition, removing substances that are noticeable as vision-obscuring materials.

3.3.1.2. Turn the work over in immaculate condition inside and outside the premises.

3.3.1.3. Clean all work on the premises including walks, drives, curbs, paving, fences, grounds and walls. Provide a clean shine on slick surfaces. Remove smudges, marks, stains, fingerprints, soil, dirt, paint, dust, lint, labels, discolorations and other foreign materials.

3.3.1.4. Clean all finished surfaces on interior and exterior of Project including floors, walls, ceilings, windows, glass, doors, fixtures, hardware and equipment. Final wax and polish all natural finish metal on interior or exterior surfaces. Clean and apply finish (including wax) to all floors as recommended by the manufacturer and accepted by Owner.

3.3.2. In addition to the cleaning specified above and more specific cleaning required in the various technical Specifications, Contractor shall prepare the building(s) for occupancy by a thorough cleaning throughout, including washing (or cleaning by approved methods) surfaces on which dirt or dust has collected, and by washing glass on both sides leaving a smear-free shine. Contractor shall wash exterior glass using a window-cleaning contractor specializing in such work.

3.3.3. Contractor shall remove temporary buildings and structures, fences, scaffolding, surplus materials and rubbish of every kind from the Site. Contractor shall repair these areas to be compatible with the surrounding construction finished condition.

END OF SECTION 01 77 00

FOR MDACC USE ONLY. DELETE THIS PAGE BEFORE ISSUING DOCUMENTS.

DOCUMENT REVISION HISTORY

Issue	Date	Revision Description	Author
Original Issue	20160526		
Rev. 1	20200716	ODG Revision Request ID 214, Typo Correction 1.6.1.4	B. Ogle
Rev. 2			
Rev. 3			
Rev. 4			
Rev. 5			

SECTION 01 78 39 – PROJECT RECORD DOCUMENTS

PART 1 - GENERAL

1.01 RELATED DOCUMENTS

A. The Contractor's attention is specifically directed, but not limited, to the Uniform General Conditions for University of Texas System Building Construction Contracts (UTUGCs) for other requirements.

B. Drawings and general provisions of the Contract, including Division 00 and other Division 01 Specification Sections, apply to this Section.

C. Specifications throughout all Divisions of the Project Manual are directly applicable to this Section, and this Section is directly applicable to them.

D. General project closeout requirements are included in Section 01 77 00, Project Close-out Procedures.

E. General requirements for submittal of Shop Drawings and Product Data are included in the UTUGCs and Section 01 31 00, Project Administration.

1.02 SUMMARY

A. This Section specifies administrative and procedural requirements for Project Record Documents to be prepared and submitted by the Contractor and the Architect/Engineer, which include but are not limited to:

1. Record Documents

2. Record Drawings

3. Record Specifications

4. Final Drawings

5. Final Specifications

1.03 REFERENCE STANDARDS

A. The latest published edition of a reference shall be applicable to this Project unless identified by a specific edition date.

B. All reference amendments adopted prior to the Effective Date of this Agreement shall be applicable to this Project.

1.04 DEFINITIONS

A. The following terms used within the Section are defined in the UTUGCs, unless otherwise defined herein:

1. Contract Documents

2. Construction Documents

3. Drawings

4. Final Drawings: The Drawings from the Contract Documents that have been professionally electronically drafted reflecting the as-constructed conditions of the Work based upon the information provided by the Contractor as reflected in the Record Documents.

5. Final Specifications: Specification section of the Project Manual compiled, and incorporating all additions and edits to the Specification issued to Contractor for construction.

6. Project Workspace: Is the Owners Internet-based Project Management System

7. Record Documents

8. Records Document Edit Log: A log documenting all markings or information added to the Record Documents.

9. Record Submittal: Approved product submittal and Shop Drawing, including documentation of all Architect/Engineer and Owner comments.

10. Shop Drawings

11. Specifications

12. Submittals: Shop drawings, material data, samples, and product data to verify that the correct products and quantities will be installed on the project.

13. Supplemental Documents: Examples of Supplemental Documents include, but are not limited to: HVAC ductwork, hydronic and plumbing piping, sprinkler piping, switchgear, and custom air handling units.

B. Redline Documents: See Record Documents.

C. As-Built Drawings: See Record Documents.

D. Final Specifications – Specification section of the Project Manual compiled, incorporating all additions or edits to the specification issued to contractor for construction.

E. Final Drawings: The Drawings from the Contract Documents that have been professionally electronically drafted reflecting the as-constructed conditions of the Work from the Record Documents.

PART 2 - PRODUCTS

2.01 REQUIREMENTS FOR RECORD DOCUMENTS

A. During progress of the Work, Contractor shall maintain a set of Record Documents and Shop Drawings at the Site. Contractor must update these documents weekly, at a minimum, with mark-ups of actual installations that vary from the Work as originally shown. Contractor shall include all Drawings issued as addenda, clarifications, or Change Orders.

B. Contractor shall maintain and have available for review in conjunction with project progress meetings, a current set of the marked-up Record Documents and Shop Drawings. Availability for review and acceptability of both the format and content are prerequisites for certification and acceptance of the Application for Payment by the Owner and Architect/Engineer.

C. Contractor shall not use Record Documents for construction purposes. Contractor must protect Record Documents from deterioration and loss in a secure location.

2.02 RECORD DOCUMENTS EDIT LOG

A. During progress of the Work, Contractor shall update the Record Documents Edit Log each time updates or edits are made, or information is added, to the Record Documents and shall review the log with the Owner prior to submitting each monthly Application for Payment.

B. The Record Documents Edit Log shall include the following information as a minimum;

1. Date Edited.

2. Name and Company of Person Making Edit.

3. Edit Type: RFI, Change Order/Request for Proposal, Field Change, Red Line, Supplemental Document, and Revision/ASI.

4. Reference: name and number of the source document if applicable, such as Change Order or RFI number.

5. Sheet(s) Edited.

6. Description of Edit, unless documented by an RFI, Change Order, or Field Change.

C. Refer to Attachment “A” for Owner’s template for the Record Documents Edit Log

2.03 RECORD DRAWINGS

A. Contractor must mark-up Drawings that are most compatible for showing actual physical condition, fully and accurately and must reference all other appearances of this Work to the updated sheet. Contractor must include cross-references to the Change Order number on the updated Drawing sheet and all additional sheets where the Work is shown.

1. Contractor must mark-up with erasable colored pencil, in a legible and professional manner using separate colors where feasible, to distinguish between changes for different categories of Work at the same general location.

2. Contractor must mark-up important additional information, which was either shown schematically only or omitted from the Construction Documents. Contractor must give particular attention to information on concealed work that would be difficult to identify or measure and record at a later date.

3. Contractor must require each person preparing mark-ups to initial and date the mark-ups and indicate the name of their company

4. If Supplemental Drawings are used, Contractor must follow the requirements below for Supplemental Drawings.

5. In association with Contractor’s request for Substantial Completion inspection, Contractor must submit one (1) copy of the marked-up record drawings to Project Workspace for Owner review. Drawings shall be scanned and indexed in Adobe PDF format.

2.04 SUPPLEMENTAL DOCUMENTS

A. The use of Shop Drawings and/or fabrication drawings as supplements to the final record drawings is required for all items in which the larger scale employed on the Shop Drawings is needed to show the work in sufficient detail for Owner’s future use. When marked-up Shop Drawings are included in the Record Documents, Contractor must mark-up and cross-reference on the Contract Drawings at the corresponding location.

B. During maintenance and updating of the Record Drawings, the applicable Supplemental Documents must be placed in the set directly behind the Drawing that it supplements, with appropriate reference notes on both the applicable Record Drawing and all other affected drawings.

C. The Supplemental Document must be identified as a Record Document and must be numbered with an extension to the Drawing it supplements in a manner acceptable to the Owner.

2.05 RECORD SPECIFICATIONS

A. It is mandatory that all changes to specified materials, installation, warranty, etc. be clearly and fully marked within the applicable Specification section in a manner acceptable to the Architect/Engineer and the Owner. Contractor shall review with the Owner and document an acceptable procedure early in the construction phase.

B. Contractor must give particular attention to substitutions, selection of options, and similar information on work where the exact products used are not clearly identified or readily discernible in the original Specifications. When applicable, Contractor must cross-reference related Record Drawing information and product data.

C. Contractor must neatly transcribe and post all marked-up information to a "clean" copy of the Specifications, ensuring that similar types of information are annotated in like fashion throughout the Specifications.

D. In association with Contractor's request for Substantial Completion inspection, Contractor must submit the marked-up Site copy of the Record Specifications to the Owner for review. Upon the Owner's acceptance that the Record Specifications are accurate and complete, the Architect/Engineer will proceed with preparation of Final Specifications.

2.06 RECORD SUBMITTALS

A. During progress of the Work, Contractor shall maintain copies of each approved product submittal and Shop Drawing, including documentation of all Architect/Engineer and Owner comments. Contractor shall include variations in product as delivered to the Site and variations from manufacturer's instructions and recommendations for installation.

B. Contractor shall give particular attention to concealed products and portions of the Work that are not clearly identified in the original Submittal or cannot otherwise be readily discerned at a later date by direct observation. Contractor shall cross reference to change orders and record drawings and specifications.

C. These Record Submittal requirements are in addition to inclusion of similar material as Supplemental Drawings or data for Operating and Maintenance Manuals.

PART 3 - EXECUTION

3.01 SUBMISSION

A. Prior to requesting Substantial Completion, Contractor shall submit all Record Documents via Project Workspace.

1. Contractor is responsible for each Subcontractor submission and coordination of Record Documents.

2. Contractor shall submit to the Owner and Architect/Engineer, a PDF indexed with scanned color copies of each Record Drawing.

3. Submit all Record Documents related to each Subcontractor's particular Work, whether or not changes and additional information were recorded.

END OF SECTION 01 78 39

Download an Electronic Version of the Record Documents Edit Log template at the following Internet Address
http://www2.mdanderson.org/depts/cpm/standards/supp.html#templates

RECORD DOCUMENTS EDIT LOG

This log is used to capture all edits and changes made to the record documents (drawings, specifications, approved submittals). When making ANY edit/change to the record documents, the person making the edit/change shall document it by making an entry in this log. By keeping this log, all project stakeholders can easily see what has been done to the record documents. This will help ensure a complete set of record documents, make it easier to coordinate record document maintenance between all parties, and improve the quality of the final product.

Edit Types		
Abbreviation	**Edit Type**	**Example/Notes**
RFI	Request for Information	Changes/clarifications made to the contract documents by RFI's.
CO/RFP	Change Order or Request for Proposal	The Change Order is the official change document, but reference to the RFP may be necessary if the CO is in process.
Field Change	Field Change	A change that was made without an initiating document that is within the allowable tolerances. If the change is followed up on with an RFI, RFP/CO then it is no longer a field change.
Red Line	Red Line, As-Constructed, Omitted or Not Shown in drawings	This is for work that is not specifically shown in the drawings. For example, the electrical circuit locations may not be shown in the design, but the electrical sub-contractor has drawn them on the contract drawing sheet.
Sup. Doc.	Supplemental Document	Shop Drawings, sketches, schematics that show the work in greater detail and are intended to be included with the final as-built documents. Could be issued by any party. MEP shop drawings are required to be included with the record documents.
Revision/ASI	Revisions or Architect's Supplemental Instructions	Changes/clarifications made to the contract documents by ASI's or revisions issued by A/E
Addendum	Addendum	Changes/clarifications made to the contract documents by Addenda.

Date Edited *MM / DD / YYYY*	**Name and Company of Person Making Edit**	**Edit Type(s)** *Select all that apply*	**Reference** *Ex. RFI-123*	**Sheet(s) Edited**	**Description of Edits**
/ /201		☐ RFI ☐ CO/RFP ☐ Field Change ☐ Red Line ☐ Sup. Doc. ☐ Revision/ASI ☐ Addendum ☐ Other:	☐ N/A		
/ /201		☐ RFI ☐ CO/RFP ☐ Field Change ☐ Red Line ☐ Sup. Doc. ☐ Revision/ASI ☐ Addendum ☐ Other:	☐ N/A		

Project # and Name: GC: Primary Contact for Record Documents:

Example

ATTACHMENT “B” – DRAWING SUBMITTAL TO FM LIBRARY PROCESS

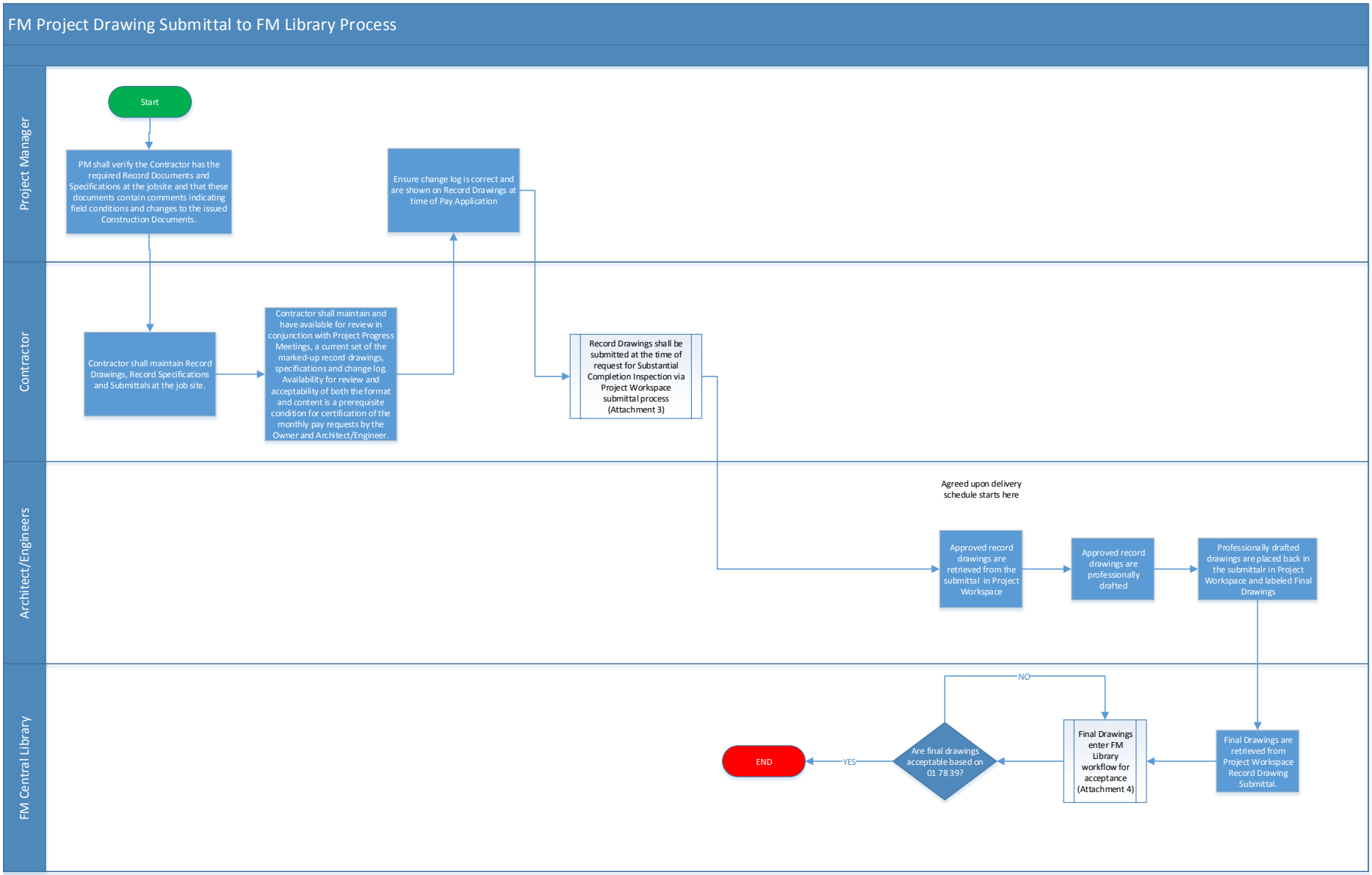

PROJECT WORKSPACE SUBMITTAL WORKFLOW

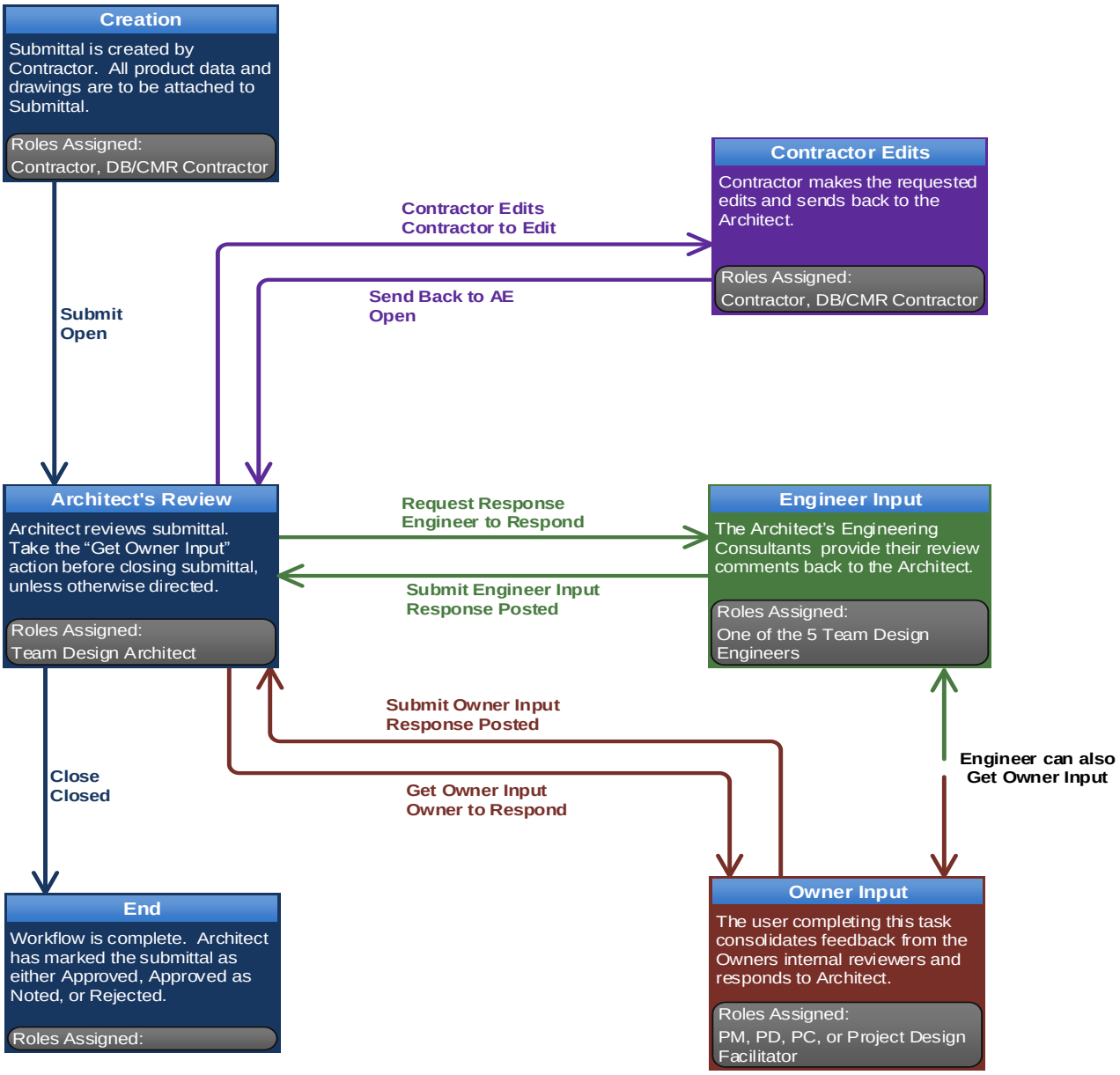

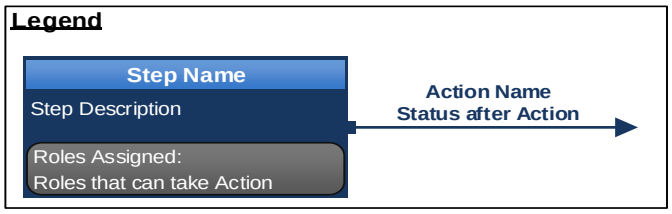

ATTACHMENT “D” – FACILITIES CENTRAL LIBRARY WORKFLOW

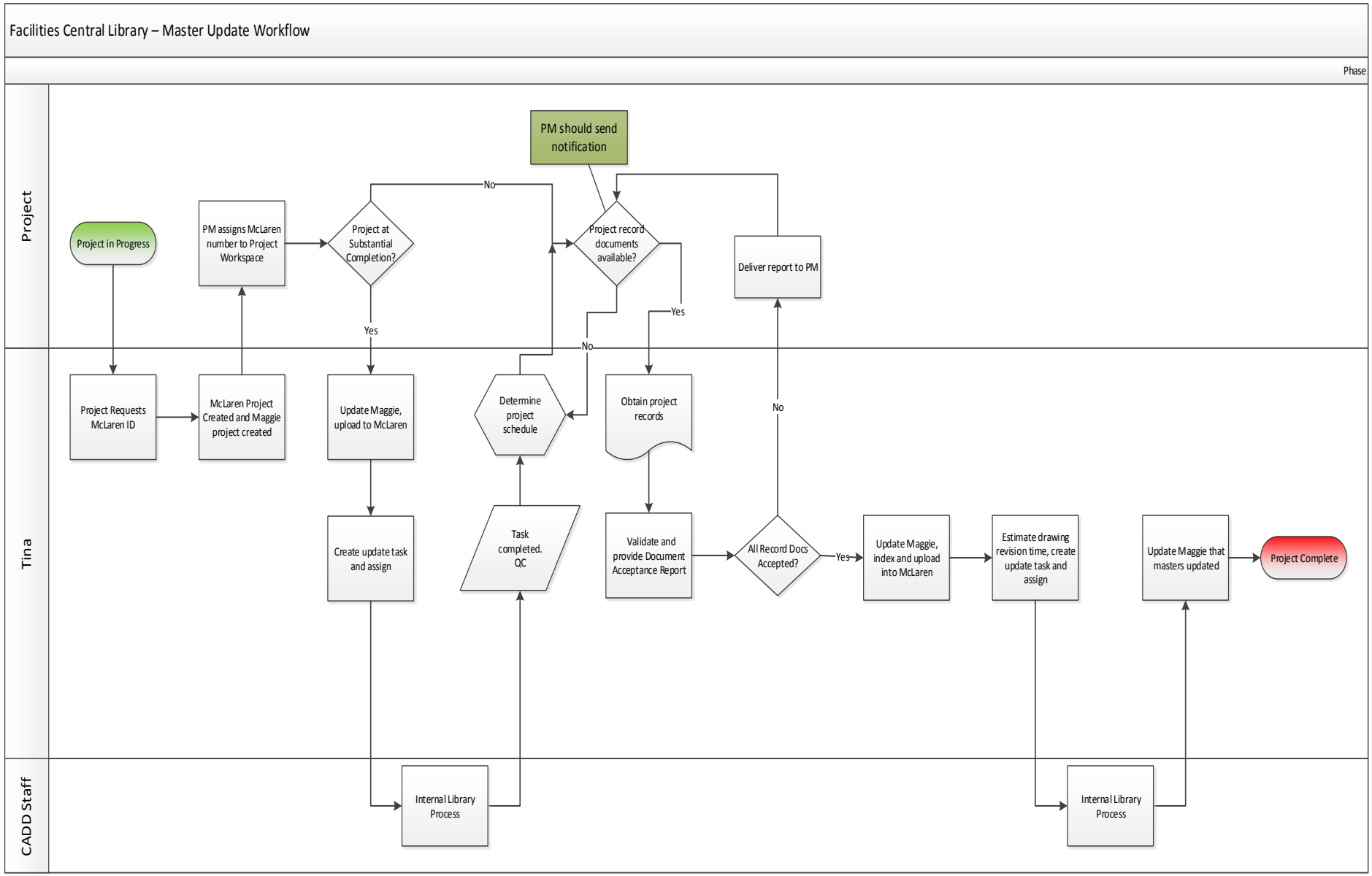

SECTION 01 78 46 – MAINTENANCE MATERIALS

PART 1 - GENERAL

1.01 RELATED DOCUMENTS

A. Drawings and general provisions of the Contract, including General and Supplementary Conditions and Division 01 Specification Sections, apply to this Section.

B. Specifications throughout all Divisions of the Project Manual are directly applicable to this Section, and this Section is directly applicable to them.

1.02 SUMMARY

A. Section includes minimum requirements for surplus maintenance materials of the same production run of installed products (attic stock) to be furnished as part of the Project and that Contractor shall deliver to Owner's designated storage facility.

B. Furnish maintenance materials as described within Part 2 – Schedule of Maintenance Material Items.

1.03 DEFINITIONS

A. Maintenance Materials: Additional material designated within this Section intended to match and replace non-standard products installed in this Project. Non-standard products may include materials that require a specific color or pattern.

B. Spare Parts: Parts, tools, service kits, or equipment components that are included in the purchase of the original equipment and are provided by the original equipment manufacturer for use by the Owner.

C. Perishable Items: Items such as paint, coatings, adhesives, batteries, and other items with a finite shelf life.

1.04 DELIVERY, STORAGE AND HANDLING

A. Prepare items for storage as follows:

1. Items shall be delivered in undamaged, original packing, or packaged in a protective covering for storage.

2. Item description, manufacturer's name and model number where applicable, quantity, MD Anderson project name, and MD Anderson building name shall be clearly marked on a visible surface of the packaging.

3. Mechanical rooms, electrical rooms, telecommunications, and other service areas shall not be used as storage or staging areas unless Contractor obtains prior written approval from the Owner's property manager and Environmental Health and Safety representative.

B. Storage Locations:

1. All items are to be stored within the construction footprint or offsite. Additional storage space will not be permitted outside of the construction footprint.

C. Delivery:

1. Deliver materials directly to an Owner-approved, designated storage or warehouse facility, confirmed prior to delivery.

PART 2 - PRODUCTS

2.01 GENERAL

A. All materials shall meet or exceed all applicable referenced standards, federal, state and local requirements, and conform to codes and ordinances of authorities having jurisdiction.

B. All maintenance materials required are referenced in this specification section.

2.02 SCHEDULE OF MAINTENANCE MATERIAL ITEMS

Specification	Material Item Description	Furnished Quantity
08 71 11	Door Hardware - Keying	Furnish a complete set of specialized tools for removal and replacement of door hardware. Furnish six (6) master keys and three (3) change keys per key set. All keys and final cores are to be provided direct to Owner by this supplier.
09 30 00	Tile and Trim Units	Full size units equal to 3 percent of amount installed, for each type, composition, color, pattern, and size
09 51 00	Acoustical Ceiling Units,	Acoustical Ceiling Units: Full size units equal to 2.0 percent of amount installed.
09 65 13	Resilient wall base	Furnish not less than 10 linear feet for each 500 linear feet or fraction thereof of each different type and color of resilient wall base installed.
09 65 16	Resilient sheet floor covering	Furnish not less than 10 linear feet for each 500 linear feet or fraction thereof, in roll form of each different composition, wearing surface, color, and pattern of resilient sheet floor covering installed.
09 68 00	Carpet Tile	Full size tiles for each type of material equal to 10 percent of amount installed
09 97 00	Multi-Color Interior Coating	Multi-Color Interior Coating: Furnish quantity equal to 2 percent of amount applied, but not less than one gallon, for each color and pattern installed.
10 26 00	Wall and corner guard, and wall protection material	deliver to Owner not less than 2 percent of each type, color, and pattern of wall and corner guard, and wall protection material
20 05 16	Piping Expansion Compensation - Extra Materials	Provide two (2) 12-ounce containers of packing coverage for leak-free performance of expansion joints.
21 10 13	Wet Standpipe & Sprinkler System - Extra Materials	Provide supply of spare heads of each type installed under the Contract in quantities as required by National Fire Protection Association Standard No. 13. The heads shall be packed in a suitable wall mounted

		sprinkler cabinet and shall be representative of and in proportion to, the number of each type and temperature rating installed. In addition to the spare heads, the Contractor shall provide not less than three special sprinkler head wrenches for each type of head.
21 13 16	Preaction Sprinkler Systems - Extra Materials	Provide supply of spare heads of each type installed under the Contract in quantities as required by National Fire Protection Association Standard No. 13. The heads shall be packed in a suitable wall mounted sprinkler cabinet and shall be representative of and in proportion to, the number of each type and temperature rating installed. In addition to the spare heads, the Contractor shall provide not less than three special sprinkler head wrenches for each type of head.
22 10 00	Plumbing Piping - Extra Materials	Provide one differential pressure meter kit for use with domestic hot water return circuit balancing valves installed within this project. Kit shall include differential pressure gauge, hoses with 90 micron inline filters, readout probes, circuit setter calculator and carrying case.
22 10 30	Plumbing Specialties - Extra Materials	Provide two loose keys for each type of wall hydrant box. Provide manufacturer's standard test kit for each type of backflow preventer installed.
22 20 23	Natural Gas Piping - Extra Materials	Provide one (1) plug valve wrench for every ten (10) plug valves sized 2 inches and smaller, minimum of one. Provide each plug valve sized 2-1/2 inches and larger with a wrench incorporating a setscrew.
22 40 00	Plumbing Fixtures - Extra Materials	Provide two service kits for each type of faucet, flush valve, shower/tub valve & all other trim/accessories having serviceable parts
23 40 00	Filters - Extra Materials	Furnish (1) extra set of new filters for each filter bank after substantial completion including but not limited to: replaceable throwaway, replaceable dry type medium and high efficiency, high efficiency caissons
26 28 13	Fuses, 600 Volt	Provide (1) set of spare fuses (3 fuses) of each size and type used on the project in a keyed lockable fuse cabinet (keyed to Owner's master electrical key) Fuse cabinet to be mounted in main switchgear room of the building as designated by Owner.

26 51 00	Lighting Fixtures	Provide a stock of replacement lamps in original cartons or packing sleeves, amounting to (10%) not less than (2) lamps in each case, of each type and size
28 30 00	Fire Alarm & Smoke Detector Systems - Extra Materials	The installing fire alarm Subcontractor shall furnish a total of 1 percent of the total devices installed, or a minimum amount of one device per quantities shown, including: 1. Smoke detector bases and heads. (Minimum one device per first 25 installed) 2. Heat detector bases and heads. (Minimum one device per first 25 installed) 3. Manual pull stations. (Minimum one device per first 25 installed) 4. Audio/visual devices. (Minimum one device per first 15 installed) 5. Magnetic holdbacks. (Minimum one device per 15 first installed) 6. Duct detector bases, heads (Minimum one device per first 15 installed) 7. Addressable monitor modules. (Minimum one device per first 15 installed) 8. Addressable control modules. (Minimum one device per first 5 installed) 9. Remote indicators. (Minimum one device per first 5 installed) 10. For any project requiring more than 20 pull stations, two (2) stopper II type pull station covers shall be provided to the Owner as spare parts.

2.03 SPARE PARTS

A. The Owner's property manager or maintenance supervisor for the Project building is responsible for the acceptance and storage of spare parts.

B. Items included with the purchase of materials or equipment that are considered spare or replacement parts are the property of MD Anderson and shall be submitted to the area for acceptance and storage.

C. Installation aids, transportation tools and all items that are not deemed as spare parts shall be disposed of per Owner's waste disposal policies, or may be retained by the Contractor.

PART 3 - NOT USED

END OF SECTION 01 78 46

SECTION 01 79 00 - DEMONSTRATION AND TRAINING

PART 1 - GENERAL

1.01 RELATED DOCUMENTS

A. Drawings and general provisions of the Contract, including General Conditions and Division 01 Specification Sections, apply to this Section.

B. Specifications throughout all Divisions of the Project Manual are directly applicable to this Section, and this Section is directly applicable to them.

1.02 SUMMARY

A. This Section includes administrative and procedural requirements for instructing Owner's personnel, including the following:

1. Demonstration of systems, subsystems, and equipment operation.

2. Training in operation and maintenance of systems, subsystems, and equipment.

3. Demonstration and training video recordings.

B. Refer to individual Technical Specification Sections for additional demonstration and training requirements related to systems and components.

C. Demonstration and training shall follow successful system and equipment start-up and Owner acceptance of commissioning tests as described in Section 01 91 00 – General Commissioning Requirements.

1.03 QUALITY ASSURANCE

A. Facilitator Qualifications: A firm or individual experienced in training or educating maintenance personnel in a training program similar in content and extent to that indicated for this Project, and whose work has resulted in training or education with a record of successful learning performance.

B. Instructor Qualifications: A factory-authorized service representative, experienced in operation and maintenance procedures and training.

1.04 SUBMITTALS

A. Training Plan: Submit outline of instructional program for demonstration and training, including a list of training modules and a schedule of proposed dates, times, length of instruction time, and instructors' names for each training module. Include learning objective and outline for each training module. Refer to Owner’s Commissioning Process Templates for example forms of the Training and Orientation Agenda and Staff Training and Orientation Record.

1. Indicate proposed training modules using manufacturer-produced demonstration and training video recordings for systems, equipment, and products in lieu of video recording of live instructional module.

B. Qualification Data: For facilitator and/orinstructor.

C. Attendance Record: For each training module, submit list of participants and length of instruction time.

D. Evaluations: For each participant and for each training module, submit results and documentation of performance-based test.

1.05 CLOSEOUT SUBMITTALS

A. Demonstration and training video recordings, including pre-produced video recordings as applicable: Submit two (2) copies within seven (7) days of end of each training module.

1. Identification: On each copy, provide an applied label with the following information:

a. Name of Project.

b. Name and address of videographer.

c. Name of Architect.

d. Name of Contractor or Construction Manager.

2. Transcript: Prepared and bound in format matching Operating and Maintenance Manuals. Mark appropriate identification on front and spine of each binder. Include a cover sheet with same label information as the corresponding video recording. Include name of Project and date of video recording on each page.

3. At completion of training, submit complete training manual(s) for Owner's use prepared and bound in format matching Operating and Maintenance Manuals and also in PDF electronic file format.

1.06 COORDINATION

A. Coordinate instruction schedule with Owner's operations. Adjust schedule as required to minimize disrupting Owner's operations and to ensure availability of Owner's personnel.

B. Coordinate instructors, including providing notification of dates, times, length of instruction time, and course content.

C. Coordinate content of training modules with content of approved emergency, operation, and maintenance manuals. Do not submit instruction program until operating and maintenance data has been reviewed and approved by Architect/Engineer.

D. Furnish minimum demonstration and training instruction time as described within the following table for architectural, plumbing, fire protection, HVAC and electrical systems and components.

Equipment / System	Total Hours
Architectural Finishes - O&M	4 Hr
Overall Maintenance Requirements – O&M	4 Hr
Overall Mechanical System Review – O&M/Eng.	4 Hrs
Overall Electrical System Review – O&M/Eng.	4 Hrs
Overall Plumbing System Review – O&M/Eng.	4 Hrs
Fire Protection/ Detection Overall Systems Review – EHS/O&M/Eng.	4 Hrs
Utility Emergency Shut-Offs-End User/O&M	4 Hrs

PART 2 - PRODUCTS

2.01 INSTRUCTION PROGRAM

A. Instruction Program Structure: Develop an instruction program that includes individual training modules for each integrated system operations and for equipment not part of a system, as required by the Owner's training requirements and by individual Specification Sections.

B. Pre-instruction Meeting: Conduct a meeting at the Project site to review methods and procedures related to demonstration and training including, but not limited to, the following:

1. Inspect and discuss locations and other facilities required for instruction.

2. Review and finalize instruction schedule and verify availability of educational materials, instructors' personnel, audiovisual equipment, and facilities needed to avoid delays.

3. Review required content of instruction.

4. For instruction that must occur outdoors, review forecasted weather conditions and procedures to follow if conditions are unfavorable.

C. Training Plan:

1. Contractor shall submit a written training plan, referred to as the Training Plan, to the Owner for review and approval. Training Plan shall cover the following elements.

a. Equipment and related systems included in training.

b. Intended audience.

c. Location of training.

d. Objectives.

e. Subjects covered.

f. Duration of training on each subject.

g. Instructor for each subject.

h. Methods (classroom lecture, video, Project site walk-through, actual operational demonstrations, written handouts, etc.).

i. Instructors and qualifications.

2. Contractor shall coordinate, schedule and complete the training related to all equipment specified in the Contract Documents. Contractor may utilize the installing subcontractor and/or manufacturers' representative or others approved in advance by Owner for specific portions of equipment or systems training.

3. Owner must approve any deviations from the Contract Document requirements prior to the Contractor developing the Training Plan.

4. Contractor shall conduct classroom-style training session followed by field demonstrations of system operation. When equipment or a system requires both demonstration and training, Contractor may combine the demonstration and training provided that the Contractor obtains the Owner's approval at least ten (10) days prior to the demonstration and training.

5. Contractor shall use Operating and Maintenance Manuals and the Equipment Matrix as a basis for instructing Owner's staff regarding system operation. Contractor shall review contents of Operating and Maintenance Manuals and review equipment data and performance verification to Owner as part of Owner training. This instruction and data review should be held in a classroom environment.

6. As a minimum, Contractor shall provide training on all systems including, but not limited to, the following (as applicable to the Project):

    a. Architectural Items.

    b. Heating, Ventilating, and Air Conditioning Airside and Waterside Systems.

    c. Building Automation System.

    d. Electrical Systems.

    e. Life Safety Systems (including Fire Alarm, Stairwell Pressurization, Fire Protection, and Smoke Containment, Control, and Response System).

    f. Elevators/Escalators.

    g. Refrigeration Systems.

    h. Lighting Fixtures and Control Systems.

    i. Fire Alarm System.

    j. Communications Systems (including Wired and Wireless Networks, Data, Nurse Call).

    k. Emergency Power and Uninterruptible Power Supply (UPS) Systems.

    l. Security System.

    m. Domestic and Process Water Systems.

    n. Medical Gas and Vacuum Systems.

    o. Laboratory Gas and Vacuum Systems.

    p. Any other major system not identified above.

7. Training shall include:

    a. Usage of the printed installation, operation and maintenance instruction material included in the Operating and Maintenance Manuals.

b. Review of the written operating and maintenance instructions emphasizing safe and proper operating requirements, preventative maintenance, special tools needed and spare parts inventory suggestions. The training shall include start-up, operation in all modes possible, shutdown, seasonal changeover and any emergency procedures.

c. Discussion of relevant health and safety issues and concerns.

d. Discussion of warranties and guarantees.

e. Common troubleshooting problems and solutions.

f. Explanation of information included in the Operating and Maintenance manuals and the location of all plans and manuals in the facility.

g. Discussion of any peculiarities of equipment installation or operation.

D. Training Modules: Develop a learning objective and teaching outline for each module. Include a description of specific skills and knowledge that participant is expected to master. For each module, include instruction for the following as applicable to the system, equipment, or component:

1. Basis of System Design, Operational Requirements, and Criteria: Include the following:

a. System, subsystem, and equipment descriptions.

b. Performance and design criteria if Contractor is delegated design responsibility.

c. Operating standards.

d. Regulatory requirements.

e. Equipment function.

f. Operating characteristics.

g. Limiting conditions.

h. Performance curves.

2. Documentation: Review the following items in detail:

a. Emergency manuals.

b. Operations manuals.

c. Maintenance manuals.

d. Project record documents.

e. Identification systems.

f. Warranties and bonds.

g. Maintenance service agreements and similar continuing commitments.

3. Emergencies: Include the following, as applicable:

a. Instructions on meaning of warnings, trouble indications, and error messages.

b. Instructions on stopping.

c. Shutdown instructions for each type of emergency.

d. Operating instructions for conditions outside of normal operating limits.

e. Sequences for electric or electronic systems.

f. Special operating instructions and procedures.

4. Operations: Include the following, as applicable:

a. Startup procedures.

b. Equipment or system break-in procedures.

c. Routine and normal operating instructions.

d. Regulation and control procedures.

e. Control sequences.

f. Safety procedures.

g. Instructions on stopping.

h. Normal shutdown instructions.

i. Operating procedures for emergencies.

j. Operating procedures for system, subsystem, or equipment failure.

k. Seasonal and weekend operating instructions.

l. Required sequences for electric or electronic systems.

m. Special operating instructions and procedures.

5. Adjustments: Include the following:

a. Alignments.

b. Checking adjustments.

c. Noise and vibration adjustments.

d. Economy and efficiency adjustments.

6. Troubleshooting: Include the following:

a. Diagnostic instructions.

b. Test and inspection procedures.

7. Maintenance: Include the following:

a. Inspection procedures.

b. Types of cleaning agents to be used and methods of cleaning.

c. List of cleaning agents and methods of cleaning detrimental to product.

d. Procedures for routine cleaning

e. Procedures for routine and preventive maintenance.

f. Instruction on use of special tools.

8. Repairs: Include the following:

a. Diagnosis instructions.

b. Repair instructions.

c. Disassembly; component removal, repair, and replacement; and reassembly instructions.

d. Instructions for identifying parts and components.

e. Review of spare parts needed for operation and maintenance.

PART 3 - EXECUTION

3.01 PREPARATION

A. Assemble educational materials necessary for instruction, including documentation and training modules. Assemble training modules into a training manual organized in coordination with requirements in Section 01 77 00 – Project Close-out Procedures.

B. Provide Owner-approved Operating and Maintenance Manuals minimum fourteen (14) days prior to the scheduled training.

C. Set up instructional equipment at instruction location.

3.02 INSTRUCTION

A. Facilitator: Engage a qualified facilitator to prepare instruction program and training modules, to coordinate instructors, and to coordinate between Contractor and Owner for number of participants, instruction times, and location.

B. Engage qualified instructors to instruct Owner's personnel to adjust, operate, and maintain systems, subsystems, equipment, and equipment components.

C. Scheduling: Provide instruction at mutually agreed upon days and times. For equipment that requires seasonal operation, provide similar instruction at start of each season.

1. Schedule training with Owner at least seven (7) day advance notice.

3.03 FIELD DEMONSTRATION

A. Contractor shall demonstrate in the field: start-up, operation, control, adjustment, trouble-shooting, servicing, maintenance, and shutdown of the system(s) and each component device.

B. Contractor shall demonstrate system performance at each stage of sequence of operation. Contractor shall promptly correct any deficiencies noted during the demonstration and document on a Deficiency report.

C. During any demonstration, should the system fail to perform in accordance with the requirements of the Operating and Maintenance Manual or sequence of operations, the system will be repaired or adjusted as necessary and the demonstration repeated.

D. Contractor shall cooperate with Owner and Owner's Test, Adjust, and Balance Firm for verification testing and final adjustments and balancing as may be indicated in the Contract Documents or as directed by Owner.

E. The manufacturer's representatives and the installing contractor shall demonstrate both system operation and compliance to the Owner's agents and consultants. If coordinated and scheduled appropriately by the Contractor, equipment and/or systems inspections may also serve to provide the required Owner training, if approved in advance by the Owner. Refer to Section 01 45 00 – Project Quality Control.

3.04 DEMONSTRATION AND TRAINING VIDEO RECORDINGS

A. Engage a qualified videographer to record demonstration and training video recordings. Record each training module separately. Include classroom instructions and demonstrations, board diagrams, and other visual aids, but not student practice.

B. Contractor shall furnish to the Owner a professional quality video and audio recording of the training. Owner may select portions of the training to be recorded.

C. Video: Owner training videos shall be delivered to Owner in the MP4 file format container with MPEG-4 video. Video to be encoded using the H.264 codec with the following settings: variable bit rate mode (overall bitrate shall be less than 10 Mb/s), High Profile, 2 consecutive B frames, Closed GOP (GOP of half the frame rate), and CABAC. Resolution shall be progressive scan with a height of 720 pixels, and a preferred width of 1280 pixels (i.e. 720p). Frame rates shall match the source material unless source was recorded using interlaced scan in which case it shall be deinterlaced; for example going from 1080i 60 (60 interlaced fields per second) to 720p (30 progressive frames per second). Audio to be AAC encoded with a bit rate between 128 and 192 Kb/s at a sample rate of 48kHz using Stereo or Stereo + 5.1.

1. Electronic Media: Read-only format compact disc acceptable to Owner, with commercial-grade graphic label.

2. File Hierarchy: Organize folder structure and file locations according to Operating and Maintenance Manual table of contents; confirm with Owner. Provide complete screen-based menu.

3. File Names: Use file names based upon name of equipment generally described in video segment, as identified in Project specifications.

4. Contractor and Installer Contact File: Using appropriate software, create a file for inclusion on the Equipment Demonstration and Training DVD that describes the following for each Contractor involved on the Project, arranged according to Project Manual table of contents:

    a. Name of Contractor/Installer.

    b. Business address.

    c. Business phone number.

    d. Point of contact.

    e. E-mail address.

D. Recording: Mount camera on tripod before starting recording, unless otherwise necessary to adequately cover area of demonstration and training. Display continuous running time.

1. Film training session(s) in segments not to exceed 15 minutes.

    a. Produce segments to present a single significant piece of equipment per segment.

    b. Organize segments with multiple pieces of equipment to follow order of Project Manual table of contents.

    c. Where a training session on a particular piece of equipment exceeds 15 minutes, stop filming and pause training session. Begin training session again upon commencement of new filming segment.

    d. Light Levels: Verify light levels are adequate to properly light equipment. Verify equipment markings are clearly visible prior to recording.

E. Light Levels: Verify light levels are adequate to properly light equipment. Verify equipment markings are clearly visible prior to recording.

1. Furnish additional portable lighting as required.

F. Narration: Describe scenes on video recording by either audio narration by microphone while video recording is recorded or by dubbing audio narration off-site after the recording. Include description of items being viewed.

G. Pre-produced Video Recordings: Provide video recordings used as a component of training modules in same format as recordings of live training.

END OF SECTION 01 79 00

SECTION 01 89 23 – SITE HVAC UTILITIES PERFORMANCE REQUIREMENTS

PART 1 - GENERAL

1.01 RELATED DOCUMENTS

A. Drawings and general provisions of the Contract, including the Uniform General Conditions for University of Texas System Building Construction Contracts (UTUGCs), Owner's Special Conditions, and Division 01 Specification Sections, apply to this Section.

B. Specifications throughout all Divisions of the Project Manual are directly applicable to this Section, and this Section is directly applicable to them.

1.02 SUMMARY

A. Contractor shall furnish all the labor, equipment, materials, and means required to carry out proper and efficient measures wherever and as often as necessary to realize the most efficient consumption of utilities which are consumed during the Contract Time of the Project.

B. Contractor shall prepare an Efficient Utilities Consumption Plan, as described within this Section, for Owner review and approval.

C. The Efficient Utilities Consumption Plan shall only utilize building automation components, mechanical equipment, and other apparatuses being supplied for the Project, as set forth in the Construction Documents.

1.03 REFERENCE STANDARDS

A. The latest published edition of a reference shall be applicable to this Project unless identified by a specific edition date.

B. All reference amendments adopted prior to the effective date of this Contract shall be applicable to this Project.

1.04 DEFINITIONS

Capitalized terms used in this Section shall have the meanings as set forth in the Contract, the UTUGCs, or both, unless otherwise defined or modified below.

A. Efficient Utilities Consumption Plan (EUCP): A document that describes objectives and the processes by which the Contractor will minimize utility consumption for Major Building Systems starting at the time of equipment start-up and through Substantial Completion. The document shall provide occupied/unoccupied schedules for AHU Zones prior to Substantial Completion. The document shall describe how the Contractor will monitor and ensure that Owner-furnished utilities are efficiently utilized to reduce Owner's utility expense throughout the Contract Time.

B. Major Building System(s): All HVAC air handling units rated 5,000 CFM or greater or chilled / heating hot water heat exchanger system(s) where applicable (including chilled / heating hot water pumps) rated at 300 tons or greater.

C. AHU Zone: Defined as temperature controlled spaces within a HVAC conditioned building on a per floor and air handling unit (AHU) basis. For example, an AHU Zone is a contiguous space having one (or more) air terminal unit (ATU) boxes and its (their) associated controllers connected to an Air Handling Unit rated approximately 5,000 to 10,000 CFM. Larger AHU greater than approximately 10,000 CFM usually consists of multiple AHU Zones based on the design of HVAC system. All spaces of a conditioned building shall be included in a specific AHU Zone

D. Commissioning Plan: A document that provides the structure, schedule, and coordination plan for the Commissioning process from the construction phase through the warranty period. The Commissioning Plan will describe the project and systems to be commissioned, Commissioning process activities, procedures to follow throughout the process, roles and responsibilities for each participant, and general description of testing and verification methods. The Commissioning Plan must satisfy the Owner's Test Requirements. Refer to Owner's Specification Section 01 91 00, General Commissioning.

E. Start-up: The activities where equipment is initially energized, tested, and operated. Start-up is completed prior to Functional Performance Testing. Refer to Owner's Specification Section 01 91 00, General Commissioning.

1.05 EUCP FUNCTIONAL INTENT

A. The Efficient Utilities Consumption Plan's functional intent is to minimize energy consumption and utility costs during the Contract Time. The Contractor shall provide the EUCP as soon as possible and maintain the plan objective during the Contract Time. The following energy optimizations strategies shall be implemented as applicable to the project:

1. Automated modulation of CHW / HW valves in lieu of manual valve positioning for applicable AHU(s) and heat exchanger(s).

2. Automated modulation of fans and pumps through variable frequency drive speeds in lieu of manually setting speeds in HAND mode for electrical motors greater than 10 horsepower.

3. Automated control of outside air intake volumetric flow rates in order not to exceed design parameters or occupancy requirements.

4. Maintain the minimum TECO CHW and steam peak utility demand charge for the project throughout the Contract Time.

5. Automated space temperature set point control per air terminal unit controller under the AHU zoning and implementation of optimal night setback schedules once the associated HVAC air terminal unit controllers have been commissioned and are capable of providing control.

1.06 SUBMITTALS

A. Contractor shall submit a draft EUCP to Owner for review within twenty-one (21) days of issuance of the Notice to Proceed with Construction or within ninety (90) days prior to initial installation of materials or equipment that will undergo Start-up, as directed by Owner

PART 2 - PRODUCTS

2.01 EFFICIENT UTILITIES CONSUMPTION PLAN (EUCP)

A. Efficient Utilities Consumption Plan shall include, but not be limited to, a description of the following as applicable to the Project:

1. The EUCP shall identify all Major HVAC Building Systems for the project which utilize chilled / heating hot water utilities. The EUCP shall disclose in detail how the Contractor intends to efficiently utilize chilled / heating hot water utilities by the Major HVAC Building Systems at the time of equipment Start-up and the duration of the construction process and up to substantial completion.

2. The EUCP shall address what actions shall be taken by the Contractor on Air Handler Units with capacity ratings specified earlier to ensure efficient use of chilled / heating hot water utilities prior to the start-up of the AHUs. The EUCP shall also identify where applicable, the time during the construction process that the Owner will observe the efficient operation of the fan motor speed(s), outside air damper(s), exhaust damper(s) and/or return air dampers.

3. The EUCP shall address what actions shall be taken by the Contractor on heat exchanger systems with capacity ratings specified earlier to ensure the efficient use of chilled / heating hot water utilities prior to the start-up of the AHU. The EUCP shall also identify where applicable, the time during the construction process that the Owner will observe the efficient operation of primary and secondary chilled / heating hot water pumps pressure control.

4. The EUCP shall identify, where applicable, occupied / unoccupied AHU Zones and schedules for spaces. Contractor shall schedule unoccupied time periods to all AHU zone areas as soon as air terminal unit controllers are operating automatically and prior to Substantial Completion.

5. The EUCP shall meet all functional intent requirements to Owner's approval.

B. Manual operator adjustments of building control components or HVAC equipment shall not be acceptable as a EUCP.

PART 3 - EXECUTION

3.01 COMPLIANCE REQUIREMENTS TO THE EFFICIENT UTILITIES CONSUMPTION PLAN

A. The successful execution of the approved EUCP requires cooperation and involvement of all parties throughout the construction process. The Contractor shall coordinate all necessary resources to ensure EUCP objectives are met and maintained during the construction process. Contractor shall ensure all construction activities are in compliance with EUCP

B. Contractor shall solely be responsible to ensure the EUCP objectives do not impede the Commissioning Plan's timely execution.

C. Contractor shall provide EUCP updates and Contractor's compliance documentation on the Owner approved time interval. Contractor shall proceed with updates to the Owner on compliance to the EUCP at no less than 2 weeks after the first Major Building System start-up identified in the EUCP has occurred. These updates shall continue until Substantial Completion.

D. Contractor shall respond in writing to the Owner within 5 business days to confirm that any deficiencies identified by Owner have been corrected and/or provide details, time line, and target dates which are deemed acceptable by the Owner as to when deficiencies to the EUCP will be corrected. At the discretion of the Owner, the Owner shall disclose to the Contractor an estimate of financial losses for lack of timely response to any deficiencies to the EUCP requirements which shall result in Contractor liability of Owner's estimated financial losses. As set forth in the UTUGCs, paragraph 10.3.3, Owner may reduce any Application for Payment to recover these losses,

END OF SECTION 01 89 23

SECTION 01 91 00 – GENERAL COMMISSIONING REQUIREMENTS

PART 1 – GENERAL

1.1. RELATED DOCUMENTS

1.1.1. The Contractor's attention is specifically directed, but not limited to, the Uniform General Conditions for University of Texas System Building Construction Contracts (UTUGCs) for other requirements.

1.1.2. Specifications throughout all Divisions of the Project Manual, which pertain to operable equipment and/or building systems, are directly applicable to this Section, and this Section is directly applicable to them.

1.2. SUMMARY

1.2.1. This Section establishes general and administrative requirements pertaining to commissioning of equipment, devices, and building systems installed on renovation and new construction projects delivered under various contracting methodologies. Technical requirements for commissioning of particular systems and components are established in the Contract Documents.

1.2.2. It is of primary concern that all operable systems installed in the Project perform in accordance with the Contract Documents and the specified Owner's operational needs. During Commissioning, the Contractor systematically demonstrates to the Owner that the operable systems are properly performing in strict accordance with the Contract Documents.

1.2.3. Commissioning requires cooperation and involvement of all parties throughout the construction process. The Contractor shall deliver a successful Commissioning process. Successful Commissioning requires that installation of all building systems complies with Contract Document requirements and that full operational check-out and necessary adjustments are performed prior to Substantial Completion, except for deferred tests approved in advance by Owner.

1.2.4. Commissioning will encompass and coordinate traditionally separate functions of system documentation, Inspection, Prefunctional Checklists and start-up, control system calibration and point-to-point checkout, testing, adjusting, and balancing, validated trend data, Functional Performance Tests, Integrated System Tests, Contractor demonstration to the Owner, and training of Owner’s personnel. This requires assembling all related documentation into one Commissioning Manual. Commissioning is intended to achieve the following specific objectives of the Contract Documents.

1.2.4.1. Verify and document proper installation and design parameters of equipment, systems, and integrated systems.

1.2.4.2. Ensure that operating and maintenance and Commissioning documentation requirements are complete.

1.2.4.3. Provide Owner with functional buildings and systems that meet the Contract Document requirements at Substantial Completion.

1.3. DEFINITIONS

Capitalized terms used in this Section shall have the meanings as set forth in the Contract, the UTUGCs, or both, unless otherwise defined or modified below.

1.3.1. Commissioning: A systematic process confirming that building systems have been installed, properly started, and consistently operated in strict accordance with the Contract Documents, that all systems are complete and functioning in accordance with the Contract Documents at Substantial Completion, and that Contractor has provided Owner adequate system documentation and training. Commissioning includes Deferred Tests, as approved by Owner.

1.3.2. Commissioning Authority: Party employed on the Project, by Owner under a Separate Contract, to provide certain commissioning services as defined herein under Commissioning Authority's Role and Responsibilities. Commissioning Authority does not have authority to alter design or installation procedures without the written approval of Owner and the A/E.

1.3.3. Commissioning Plan: A document that provides the structure, schedule, and coordination plan for Commissioning during the construction phase and through the warranty period. The Commissioning Plan will describe the project and systems to be commissioned, Commissioning activities, procedures to follow throughout Commissioning, roles and responsibilities for each participant, and general description of testing and verification methods. The Commissioning Plan must satisfy all Test Requirements set forth in the Contract Documents.

1.3.3.1 Download an electronic version of the Commissioning Plan Template for submittal purposes at the following website:

https://www.mdanderson.org/content/dam/mdanderson/documents/about-md-anderson/about-us/doing-business/owner's-design-guidelines/supplemental-resources/Commissioning%20Plan%20Template.zip

1.3.4. Commissioning Team: Working group made up of representative(s) from the A/E, Contractor, Test, Adjust, and Balance Firm, Building Automation System vendor, specialty manufacturers and suppliers, Owner, and Commissioning Authority. Contractor will provide ad-hoc representation of Subcontractors on the Commissioning Team as required for implementation of the Commissioning Plan.

1.3.5. Deferred Tests: Functional Performance or Integrated System Tests performed after Substantial Completion, with Owner's approval, due to seasonal requirements, site conditions, or both, that prohibit the test from being performed prior to Substantial Completion.

1.3.6. Deficiency: Condition of a component, piece of equipment, or system that is not in compliance with the Contract Documents.

1.3.7. Factory Testing: Testing of equipment at the factory, by factory personnel with an Owner's representative present, if deemed necessary by Owner.

1.3.8. Functional Performance Test: Test of dynamic function and operation of equipment and systems executed by Contractor. Systems are tested shall be various modes, such as during low cooling or heating loads, high loads, component failures, unoccupied, varying outside air temperatures, life safety conditions, power failure, etc. Systems are run through all specified sequences of operation. Components are verified to be responding in accordance with Contract Documents. Functional Performance Tests are executed after start-ups and Prefunctional Checklists are complete.

1.3.9. Functional Performance Test Procedures: Commissioning protocols and detailed test procedures and instructions in tabular and script-type format that fully describe system configuration and steps required to determine if the system is performing and functioning properly.

1.3.10. Integrated System Test: Test of dynamic function and operation of multiple systems. Integrated System Tests are conducted under various modes, such as fire alarm and emergency situations, life safety conditions, power failure, etc. Systems are integrally operated through all

specified sequences of operation. Components are verified to be responding in accordance with Contract Documents. Integrated System Tests are executed after Functional Performance Tests are complete and prior to Substantial Completion. Integrated System Tests provide verification that the integrated systems will properly function according to the Contract Documents.

1.3.11. Integrated System Test Procedures: Commissioning protocols and detailed test procedures and instructions in tabular and script-type format that fully describe system configurations and steps required to determine if the interacting systems are performing and functioning properly.

1.3.12. Manual Test: Use of hand-held instruments, immediate control system readouts or direct observation to verify performance (contrasted to analyzing trend data to make the "observation").

1.3.13. Non-Compliance Report (NCR): A tool used to document an item or condition that does not meet the Contract Documents.

1.3.14. Prefunctional Checklist: A list of static inspections and material or component tests that verify proper installation of equipment (e.g., belt tension, oil levels, labels affixed, gages in place, sensors calibrated, etc.). The word Prefunctional refers to before Functional tests. Prefunctional Checklists must include the manufacturer's start-up checklist(s).

1.3.15. Start-up: The activities where equipment is initially energized tested and operated. Start-up is completed prior to Functional Performance Tests.

1.3.16. Test, Adjust, and Balance (TAB) Firm: The Owner may engage a Test, Adjust, and Balance Firm for the Project under a Separate Contract. When engaged for the Project, the TAB Firm shall be a part of the Commissioning Team and shall provide services as set forth in the Specifications.

1.3.17. Test Requirements: Requirements specifying what systems, modes and functions, etc. must be tested. Test Requirements are not detailed test procedures. Test Requirements and acceptance criteria are specified in the Contract Documents.

1.3.18. Training Plan: A detailed plan prepared by the Contractor, and reviewed by the Owner, that outlines the training activities, instructors, time durations, and system requirements in accordance with the Contract Documents and Commissioning Plan.

1.3.19. Trending: Data collection of monitoring points using the Building Automation System or dataloggers. Trend definitions are initiated a minimum of 14 days prior to beginning related functional performance tests.

1.4. COORDINATION

1.4.1. Commissioning Team:

1.4.1.1. Owner's Members

1.4.1.1.1. Representatives assigned by Owner's Designated Representative

1.4.1.1.2. Commissioning Authority, when engaged for the Project.

1.4.1.1.3. A/E.

1.4.1.1.4. TAB Firm, when engaged for the Project.

1.4.1.2. Contractor's Members:

1.4.1.2.1. Individuals, each having authority to act on behalf of the entity they represent, explicitly organized to implement all Commissioning activities through coordinated actions.

1.4.1.2.2. Representatives of Contractor, including but not limited to, project manager and commissioning coordinator, Subcontractors, installers, and equipment suppliers. Owner must approve Contractor's commissioning coordinator.

1.4.2. Scheduling:

1.4.2.1. Contractor shall integrate all Commissioning activities into the Baseline Schedule and the Work Progress Schedule. All parties will address scheduling problems and make necessary notifications in a timely manner to expedite all Commissioning activities.

1.4.2.2. Contractor shall provide the initial schedule of primary Commissioning activities at the pre-commissioning meeting. Prior to the first Start-up or Prefunctional Checklist test occurring, Contractor shall have incorporated and integrated all Commissioning activities into the Baseline Schedule and Work Progress Schedule with appropriately linked predecessors and successors.

1.5. ROLES AND RESPONSIBILITIES

1.5.1. Roles and responsibilities of Commissioning Team members are provided in this Section to clarify the commissioning process.

1.5.2. Owner's Role and Responsibilities:

1.5.2.1. Review Specifications containing Commissioning requirements.

1.5.2.2. Provide Owner's Test Requirements to Commissioning Team.

1.5.2.3. Approve the Commissioning Plan, Training Program and Contractor's schedule for completing all Commissioning activities.

1.5.2.4. Participate in Commissioning activities, including the following:

1.5.2.4.1. Commissioning Team meetings.

1.5.2.4.2. Review and approve Commissioning Plan, Training Plan, Prefunctional Checklists, Functional Performance Test Procedures, Functional Performance Tests, Integrated System Test Procedures, Integrated System Tests, Deferred Tests, Trending, Training Plan and other Commissioning documents.

1.5.2.4.3. Attendance at Contractor's training sessions in operation and maintenance of systems and equipment.

1.5.2.4.4. Observation of Contractor's demonstration of systems and equipment operation.

1.5.3. Commissioning Authority's Role and Responsibilities, when engaged for the project.

1.5.3.1. Prepare and submit the Commissioning Plan for Owner's approval.

1.5.3.2. Review, comment and approve on Contractor's schedule for Commissioning activities.

1.5.3.3. Participate in Contractor-led Pre-Commissioning Meeting.

1.5.3.4. Conduct and document Commissioning Team meetings.

1.5.3.5. Perform site visits as necessary or in conjunction with Commissioning Team meetings to observe component and system installations. Attend selected Project progress meetings to obtain information on construction progress.

1.5.3.6. Review and comment on Submittals and coordination drawings applicable to systems being commissioned.

1.5.3.7. Review and comment on Contractor-prepared Prefunctional Checklist and other Contractor-prepared documents, including Operating and Maintenance Manuals and Training Plan.

1.5.3.8. Prior to equipment Start-ups, review the control sequences and coordinate with the Contractor and A/E in order to prepare the Functional Performance Test and Integrated System Test procedures.

1.5.3.9. Witness equipment Start-ups as executed by Contractor.

1.5.3.10. Write Functional Performance Test Procedures and Integrated System Test Procedures for Contractor's execution of tests.

1.5.3.11. Review trend logs, confirm that all control loops are tuned complying within the maximum allowable variance (specified by Owner) prior to performing functional performance testing, and report any deficiencies for correction

1.5.3.12. Witness, verify, and document results of Functional Performance Tests and Integrated System Tests.

1.5.3.13. Coordinate resolution of Deficiencies identified during Commissioning, Deferred Tests, and during the warranty period.

1.5.3.14. Review Contractor's Training Plan.

1.5.3.15. Compile Commissioning documentation for Contractor-prepared Commissioning and Closeout Manual including test documentation, Deficiency reports and solution results; non-compliance issue tracking; and recommendations on continuous commissioning, best practices, and preventive maintenance.

1.5.4. Architect/Engineer's Role and Responsibilities:

1.5.4.1. Attend Commissioning Team meetings.

1.5.4.2. Review and Approve Commissioning Plan, Training Plan, Prefunctional Checklist, Functional Performance Test Procedures, Functional Performance Tests, Integrated System Test Procedures, Integrated System Tests, Deferred Tests, and other Commissioning documents.

1.5.4.3. Review and Approve Contractor's Training Plan.

1.5.4.4. Review and Approve Test, Adjust, and Balance plan as defined in Specification 23 05 90 and 23 05 93.

1.5.4.5. Approve technical requirements for correction of Deficiencies identified during Commissioning, Deferred Tests, and during the warranty period.

1.5.4.6. Review Operating and Maintenance Manuals.

1.5.5. Contractor's Role and Responsibilities:

1.5.5.1 Produce for Owner, Commissioning Authority and A/E's approval, the Commissioning Plan, Prefunctional Checklist, Functional Performance Test Procedures, Integrated System Test Procedures, Equipment Matrix of all devices, systems and equipment supplied, and other Commissioning documents.

1.5.5.1.1 Commissioning Authority will produce the Commissioning Plan, project-specific Functional Performance Test Procedures, and project-specific Integrated System Test Procedures.

1.5.5.1.2 Contractor shall review and provide comments on documents produced by the Commissioning Authority, and shall accept the Commissioning Plan, Functional Performance Test Procedures, and Integrated System Test Procedures as approved by Owner.

1.5.5.2 As the Project progresses, add specific checklists, test procedures, schedules, recorded results, action lists, signoff sheets and other documents for the Commissioning and Close-out Manual. Administer updates to the Commissioning and Close-out Manual with the intent that all Commissioning Team members will have up-to-date documentation as the Commissioning progresses.

1.5.5.3 Provide an individual, subject to Owner's approval, experienced in construction and Commissioning of building systems to organize, schedule, conduct, and document the Commissioning Plan and the Commissioning process. The Contractor shall assign this individual to act as the Contractor's Commissioning Coordinator. The Contractor's Commissioning Coordinator may have additional duties such as MEP Coordinator, but not as Project Manager or Superintendent. Submit qualifications demonstrating the Commissioning Coordinator's technical expertise and experience to the Owner for approval. In the event that Contractor chooses to subcontract its Commissioning obligations, then Contractor must submit the subcontractor's qualifications and personnel to Owner for Owner's approval.

1.5.5.4 Furnish and install systems that meet all requirements of the Contract Documents. Perform construction inspections, Start-ups, Prefunctional Checklists, Functional Performance Tests, and Integrated System Tests in accordance with the Contract Documents and Commissioning Plan. Correct any Deficiencies identified during these processes.

1.5.5.5 Ensure that Commissioning activities are incorporated into the Baseline Schedule and the Work Progress Schedule.

1.5.5.6 Submit inspection and Start-up documentation to Owner in accordance with this Section – 01 91 00 General Commissioning Requirements, Section 01 45 00 – Project Quality Control, Section 01 77 00 – Project Close-out Procedures, Specifications, and the Commissioning Plan.

1.5.5.7 Furnish copies of all Submittals, manufacturers' literature, maintenance information, and any other information required for the Commissioning process. Contractor must submit to Owner installation and checkout materials actually shipped inside equipment and actual field checkout sheet forms used by factory or field technicians. Cross-reference Section 01 31 00 – Project Administration and Section 01 77 00 – Project Close-out

Procedures (Operating and Maintenance Manuals) for additional required documentation.

1.5.5.8 Schedule and conduct pre-installation meetings and pre-commissioning meetings with Subcontractors and equipment suppliers related to Commissioning. Contractor must invite A/E and Owner to attend the pre-installation meetings and pre-commissioning meetings.

1.5.5.9 Provide qualified personnel, including Subcontractors as required, to fully perform the testing and operational demonstrations required by the Contract Documents and the Commissioning Plan, including any Deferred Tests or re-testing related to warranty work.

1.5.5.10 Correct Deficiencies identified during any stage of commissioning prior to proceeding, unless approved by Owner.

1.5.5.11 Provide training to Owner. Coordinate Subcontractor and vendor participation in training sessions.

1.5.5.12 Perform Deferred Tests and make necessary amendments to Operating and Maintenance Manuals and Record Documents for applicable issues identified during the Deferred Tests.

1.5.5.13 Contractor shall be responsible for the following activities and may contract with a Building Automation System (BAS) vendor for these activities.

1.5.5.13.1 Provide on-site technician skilled in software programming and hardware operation to exercise sequences of operation and to correct controls deficiencies identified during Commissioning. Contractor must provide Record Documents reflecting correction of controls deficiencies identified during Commissioning.

1.5.5.13.2 Provide instrumentation, computer, software and communication resources necessary to demonstrate compliance with the Contract Documents and the Commissioning Plan during the Prefunctional Checklist activities, Functional Performance Tests and Integrated System Tests of Building Automation System equipment.

1.5.5.13.3 Attend pre-commissioning meetings and Commissioning meetings including seasonal, post occupancy, or deferred Commissioning meetings and activities as deemed appropriate by Owner. Prepare BAS Training Plans with Commissioning Team and perform training as specified in Contract Documents and Commissioning Plan.

1.5.5.13.4 Maintain comprehensive system calibration and checkout records. Submit records to Owner.

1.5.5.13.5 Set up, capture, format analyze, and report trend logs as requested by the Commissioning Authority and/or Owner to substantiate proper systems operation.

1.5.6 Test, Adjust, and Balance Firm's Role and Responsibilities, when engaged for the project:

1.5.6.1 Attend pre-commissioning meetings and Commissioning Team meetings including seasonal, post occupancy, or deferred Commissioning meetings and activities as deemed appropriate Owner.

1.5.6.2 Submit Test, Adjust, and Balance Plan and forms describing methodology for performance of Test, Adjust, and Balance procedures specific to this Project to Owner/Engineer of record for review.

1.5.6.3 Cooperate with Contractor and Contractor's Building Automation System vendor, if any, during Commissioning.

1.5.6.4 Re-balance as needed to correct any Deficiencies identified during Commissioning.

1.5.6.5 Review BAS graphics and performance tests for accuracy, note deficiencies.

1.5.6.6 Provide T A B data to Contractor and Commissioning Team before Contractor begins Functional Performance Tests.

1.6 EQUIPMENT DOCUMENTATION REQUIREMENTS

1.6.1 Equipment Matrix:

1.6.1.1 Contractor's first submittal of the Equipment Matrix shall contain a complete listing of all equipment, fire dampers, valves, devices, and systems, contained within the Contract Documents to be installed or removed, within twenty-one (21) days of issuance of the Notice to Proceed with Construction and at least seven (7) days prior to submission of the first Application for Payment. This submittal shall be titled as "Equipment Matrix-Contract Compliance". Download an electronic version of this spreadsheet in Microsoft Excel format to use as a template for submittal purposes at the following website:

https://www.mdanderson.org/content/dam/mdanderson/documents/about-md-anderson/about-us/doing-business/owners-design-guidelines/supplemental-resources/Equipment%20Matrix%20Template.xlsx

1.6.1.2 Contractor shall coordinate Contractor's response to this requirement with Contractor's preparation of the Baseline Schedule, Work Progress Schedule, Submittal Schedule, Schedule of Values, and list of all equipment. Refer to Section 01 32 00 – Project Planning and Scheduling and Section 01 31 00 – Project Administration.

1.6.1.2.1 To the extent practical, Contractor should minimize redundant efforts in favor of a single, organized approach to all documentation required for Project equipment, systems, and devices.

1.6.1.3 The Equipment Matrix shall be formatted as a spreadsheet per Owner's template, with capability for printing various selected data columns to meet documentation requirements at various stages of construction, and for different purposes as required by various Technical Sections. The Equipment Matrix shall be updated and submitted as the project progresses using the owners project management system as outlined below:

1.6.1.3.1 As outlined in Section 1.6.1.1, the first submission of the Equipment Matrix, titled "Equipment Matrix – Contract Compliance" is intended to identify and validate the prescribed equipment to be installed or removed per the Contract Documents. Project progresses and submitted periodically as requested by Owner.

1.6.1.3.2 Once Equipment Submittals have been submitted and approved, Contractor shall submit the second submission of the Equipment Matrix titled "Equipment Matrix- Asset Number Request".

1.6.1.3.2.1 The following fields are required to be populated at a minimum prior to the second submission of the Equipment Matrix-Asset Request:

Equipment Plan Designation (Equipment Name), Specification reference, Building ID, Location / Room Number, Asset Short Description, Asset Long Description, System Level Asset (What system it serves), Product submittal reference number(s), Product submittal approval date, Name of installing Subcontractor, Installing Subcontractor contact information, Equipment Manufacturer, Equipment model number, Emergency Power Requirements (as applicable).

1.6.1.3.3 The third submission of the Equipment Matrix is to be titled “Equipment Matrix- True-up”. This submission is intended to capture changes to the contract documents that has occurred during the construction process. This submission may occur more than once throughout the construction process as changes occurs. New items shall comply with Section 1.6.1.3.2.1. Additional or removed equipment shall be identified by a contrasting color from the previously submitted Equipment Matrix.

1.6.1.3.4 The fourth submission of the Equipment Matrix is to be titled “Equipment Matrix-Final”. This submission shall contain a complete populated listing of all equipment, fire dampers, valves, devices, and systems, represented within the Record Documents.

1.6.1.3.5 Provide Owner with an electronic version of the final approved Equipment Matrix at or before Project Substantial Completion.

1.6.1.4 Contractor may elect to combine the Submittal Schedule and Equipment Matrix into one spreadsheet (with multiple tabbed sheets) that Contractor updates as the Project progresses.

1.6.1.5 The Equipment Matrix shall identify all operable devices and equipment grouped by the Construction Specification Institute (CSI) Master Format under the system they are primarily categorized under. When sorted by the column for system identification, the resulting printout must identify all system components, regardless of whether they are mechanical, electrical, or otherwise.

1.6.1.6 Contractor shall continue to update the Equipment Matrix for each device or system. Owner will assist the Contractor in collecting information on Owner-furnished and Contractor-installed equipment. The Equipment Matrix shall include the following column headings, as a minimum, for each device per specification 20 05 53:

1.6.1.6.1 Equipment Plan Designation: Equipment Naming Convention (equipment acronym and sequential number) from Contract Documents.

1.6.1.6.2 Specification Section number.

1.6.1.6.3 Building ID: Shall be obtained from Owner.

1.6.1.6.4 Location / Room Number: Owner’s Wayfinding Codes from Owner’s Space Management database referring to room number or building location. Shall be obtained from Owner.

1.6.1.6.5 Asset Short Description: The asset short description is to be a very short textual description. Type a brief, identifying description for the asset followed by a comma then the “Equipment Plan Designation”. If multiple units, of same type, include equipment ID number from the Construction Documents. This field is limited to 80 characters. Example= Pump, Secondary Chilled Water, SCHWP-01-2B.

1.6.1.6.6 Asset Long Description: A more complete description of the asset to make it clearer to the Owner’s maintenance group. Include any distinguishing details relevant to identifying the asset from other identical units (color, physical location within a room, and so on. Example: Horizontal split case pump located in North end of room.

1.6.1.6.7 System Level Asset: Type of system that the equipment serves. Shall be obtained from Owner. Example: Domestic Hot Water

1.6.1.6.8 Product submittal reference number(s).

1.6.1.6.9 Product submittal approval date.

1.6.1.6.10 Name of installing Subcontractor.

1.6.1.6.11 Installing Subcontractor contact information.

1.6.1.6.12 Equipment Manufacturer.

1.6.1.6.13 Equipment model number.

1.6.1.6.14 Equipment serial number.

1.6.1.6.15 Emergency Power: Note whether equipment is served from emergency power system.

1.6.1.6.16 Equipment manufacturer's representative (Vendor).

1.6.1.6.17 Equipment manufacturer's representative (Vendor) contact information.

1.6.1.6.18 Manufacturer's purchase order number.

1.6.1.6.19 Asset Cost: Equipment purchase price excluding all auxiliary costs.

1.6.1.6.20 Start-up Date: Date of initial equipment or device start-up by the Contractor.

1.6.1.6.21 Prefunctional Checklist completion date.

1.6.1.6.22 Functional Performance Test completion date.

1.6.1.6.23 Integrated Systems Test completion date.

1.6.1.6.24 Substantial Completion date.

1.6.1.6.25 Manufacturer's warranty start date.

1.6.1.6.26 Warranty End Date: The date on which the asset warranty ends. (Default is one year after the Substantial Completion Date unless a longer warranty period is requested or provided.)

1.6.1.7 Owner will furnish the following additional information; allow column headings for this data:

1.6.1.7.1 Asset Number

1.6.1.7.2 Parent ID

1.6.1.7.3 Asset Group Code

1.6.1.7.4 Cost Center

1.6.1.7.5 Critical Factor

1.6.1.7.6 Estimated Asset Life

1.6.1.7.7 Asset Status

1.6.1.7.8 Work Group

1.6.1.7.9 Work Area

PART 2- EXECUTION

2.1 COMMISSIONING PLAN

2.1.1 When a CxA has not been engaged for the project, Contractor shall submit draft Commissioning Plan to Owner and A/E for review within twenty-one (21) days of issuance of the Notice to Proceed with Construction or within ninety (90) days prior to initial installation of materials or equipment that will undergo Start-up and Functional Performance Tests, as directed by Owner.

2.1.2 Contractor shall allow in the Work Progress Schedule a minimum of twenty-one (21) days after the receipt by the Owner of the draft Commissioning Plan Submittal for the Owner to submit review comments to Contractor.

2.1.3 Contractor shall incorporate Owner's review comments and resubmit the revised Commissioning Plan to Owner within fourteen (14) days of receipt of the review comments.

2.1.4 Contractor shall allow in the Work Progress Schedule an additional fourteen (14) days for Owner's approval of the resubmitted Commissioning Plan that incorporates Owner's review comments.

2.1.5 PRE-COMMISSIONING MEETING

2.1.6 Upon obtaining Owner's approval of the Commissioning Plan, Contractor shall schedule, plan, and conduct a Pre-Commissioning Meeting with all parties involved in Commissioning. This meeting should include the major Subcontractors, specialty manufacturers/suppliers, A/E, Test, Adjust, and Balance Firm, Commissioning Authority, and Owner's representatives as participants.

2.1.7 Contractor shall prepare for the Pre-Commissioning Meeting by creating drafts of the following documents with input from the Owner. Commissioning Authority, when engaged for the project, will prepare the Commissioning Plan, Functional Performance Test Procedures and Integrated System Test Procedures.

2.1.7.1 Approved Commissioning Plan including the Equipment Matrix and the Close-out and Documentation Matrix as defined in Section 01 77 00 – Project Close-out Procedures.

2.1.7.2 Baseline Schedule and Work Progress Schedule incorporating Commissioning activities.

2.1.7.3 Prefunctional Checklists.

2.1.7.4 Functional Performance Test Procedures.

2.1.7.5 Integrated System Test Procedures.

2.1.8 Contractor or Commissioning Authority when engaged for the project shall conduct the Pre-Commissioning Meeting and review all aspects of the Commissioning Plan. All

documentation will be discussed and all test procedures and forms reviewed for approval with the Owner. Contractor shall prepare an outline noting responsibilities of the various parties involved in Commissioning for review at this meeting.

2.1.9 The Commissioning Plan shall be reviewed with all attendees and the scope of work discussed. Contractor should be prepared to distribute copies of the pertinent sections to the various Subcontractors involved in Commissioning.

2.1.10 Contractor shall present Commissioning target dates for the Project. These dates and durations shall be incorporated in the Baseline Schedule and the Work Progress Schedule in accordance with Section 01 32 00 – Project Planning and Scheduling.

2.2 REPORTING

2.2.1 Contractor shall provide status reports to Owner at frequencies directed by Owner.

2.2.2 Contractor shall communicate at least monthly with all members of the Commissioning Team, keeping them apprised of Commissioning progress and scheduling changes.

2.2.3 Contractor shall submit Non-Compliance and Deficiency reports to Owner within five (5) days of the date the Non-Compliance or Deficiency is first observed. This includes responses to items noted by the Commissioning Authority.

2.2.4 Contractor shall provide final Commissioning documentation to Owner in accordance with Section 01 77 00 – Project Close-out Procedures, which will become part of the Commissioning and Close-out Manual.

2.3 TEST EQUIPMENT

2.3.1 Contractor shall provide all specialized tools, test equipment and instruments required to execute start-up, checkout, and testing of equipment.

2.3.2 All specialized tools, test equipment and instruments required to execute start-up, checkout, and testing of equipment shall be of sufficient quality and accuracy to test and measure system performance within specified tolerances. A testing laboratory must have calibrated test equipment within the previous twelve (12) months. Calibration shall be NIST traceable. Contractor must calibrate test equipment and instruments according to manufacturer's recommended intervals and whenever the test equipment is dropped or damaged. Calibration tags must be affixed to the test equipment or certificates readily available.

2.4 PREFUNCTIONAL CHECKLIST

2.4.1 Contractor shall provide a Prefunctional Checklist for each system to Owner, Commissioning Authority and A/E for review.

2.4.1.1 Contractor shall provide a draft version of each individual Prefunctional Checklist at a pre-installation meeting for the system. Based on discussions at a pre-installation meeting and subsequent as-constructed conditions, Contractor shall amend and revise each Prefunctional Checklist as appropriate prior to requesting system inspection from the Owner.

2.4.1.2 Contractor shall submit the final approved Prefunctional Checklist and all supporting documentation prior to requesting Start-up and Functional Performance Tests.

2.4.2 Contractor shall review the installation and Contract Documents for each system and shall provide written confirmation of the following if not included in the Prefunctional Checklist.

2.4.2.1 All required test reports and certifications have been submitted and accepted by Owner. Contractor must provide certification of acceptance from manufacturer's representative.

2.4.2.2 Evidence that A/E has approved all Submittals for each component device.

2.4.2.3 All valve charts, wiring diagrams, control schematics, electrical panel directories, etc. have been submitted and approved, and that all devices have been installed in accordance with the Contract Documents.

2.4.2.4 All tabulated data has been submitted for each system and for each device.

2.4.2.5 Each component device has been installed in accordance with applicable codes, the Contract Documents, and manufacturer's written recommendations.

2.5 INITIAL START-UP

2.5.1 Start-up of Independent Devices:

2.5.1.1 Prior to Start-up, Contractor shall not energize or activate, or allow to be energized or activated, any operable device until Contractor has verified to Contractor's own satisfaction that all Contract Document requirements for the operable device have been met and have been documented in the Prefunctional Checklists.

2.5.1.2 Contractor may energize or start-up independent devices for operational check-out and testing only after Contractor and manufacturer's representative or engineering technician (if required by the Contract Documents) have inspected and accepted the installation. The installation must not vary from provisions of the applicable Specifications and the manufacturer's written recommendations for Start-up.

2.5.1.3 When Start-up of equipment or systems have the potential to impact Owner's daily operations or when the Contract Documents require the Owner to witness Start-up, Contractor must provide advance notice to Owner in accordance with the procedures outlined in the Contract Documents prior to Start-up. Contractor may not proceed with Start-up without the Owner's written approval.

2.5.2 Start-up of Building Systems:

2.5.2.1 Contractor shall not energize or activate any building system until the following conditions have been met:

2.5.2.1.1 Contractor has verified that all wiring and support components for equipment are complete and have been tested in accordance with the technical specifications and the manufacturer's written recommendations.

2.5.2.1.2 Contractor has verified that each component device has been checked for proper lubrication, vibration isolation, drive rotation, belt tension, control sequence, or other conditions that may cause damage.

2.5.2.1.3 Contractor has verified that all tests, meter readings, and specified electrical characteristics agree with those required by the equipment or system manufacturer and are in compliance with applicable Contract Documents.

2.5.2.1.4 Contractor has received approved building system final inspection reports. Refer to Section 01 45 00 – Project Quality Control.

2.5.2.1.5 Contractor has provided the Owner and A/E with a written fourteen (14) day notice of intent to start-up the system for operational check-out. The notification procedures outlined in the Contract Documents shall be utilized.

2.5.2.2 Contractor shall perform Start-up under supervision of the responsible manufacturer's representative in accordance with manufacturer's instructions and specification requirements.

2.5.2.3 Contractor shall coordinate and schedule system(s) Start-up in a timely manner so that each component or system can operate for a period of time that is sufficient to evaluate and adjust performance as necessary. All building systems shall be operational and must have been successfully inspected by Owner, through attendance and concurrence with results of the Prefunctional Checklists or as otherwise approved by Owner, prior to the Contractor proceeding with Functional Performance Tests.

2.5.2.4 Contractor shall clearly list outstanding items or initial Start-up and Prefunctional Checklists items not completed successfully. Contractor shall obtain from Subcontractor completed forms documenting any outstanding Deficiency within five (5) days of completion of tests.

2.5.2.5 Contractor shall review completed Deficiency forms to determine if outstanding items prevent execution of the Functional Performance Tests and shall issue any necessary responses to the Commissioning Team.

2.6 REQUEST FOR START-UP AND FUNCTIONAL PERFORMANCE TESTS

2.6.2 Contractor shall notify Owner to request: (1) initial energization or operation of equipment and systems; and (2) an inspection of any system or system component for readiness prior to Functional Performance Tests.

2.6.2.1 Request for Start-up. Contractor must certify that: (1) electrical and mechanical connections have been installed and are safe for initial Start-up; (2) Contractor has complied with Owner's utilities outage notifications; and (3) Start-up will not harm Owner's daily routine operations.

2.6.2.2 Contractor shall complete the applicable Prefunctional Checklist(s) signed by Contractor and CxA if engaged for the project, evidencing Contractor's own thorough inspection of the system and completion of Start-up activities required by the Contract Documents and the Commissioning Plan. Contractor shall submit required supporting documentation, including but not limited to, factory start-up forms, operational testing data, and certifications.

2.6.2.3 Request for Functional Performance Test. Contractor must certify that the Contractor has verified that the installation, Start-up, Prefunctional Checklists, validated trend data and initial operation of the system or component are in accordance with the Contract Documents and the Commissioning Plan including manufacturer's instructions, manufacturer's requirements for maintenance of warranty, and verification that the system is ready for Functional Performance Tests. Contractor shall ensure the updated Equipment Matrix has been submitted and approved prior to the start of Functional Performance. Contractor must certify that the manufacturer's representative has verified that the installation, Start-up, and initial operation of the system or component are in accordance with the manufacturer's published recommendations.

2.6.2 Contractor must obtain Owner's approval prior to proceeding with the Start-up or Functional Performance Test. All construction inspections must be completed. Any and all Deficiencies and all items included in the Non-Compliance Report have been brought into compliance with the Contract Documents.

2.7 FUNCTIONAL PERFORMANCE TESTS

2.7.2 Objective and Scope:

2.7.2.1 The objective of a Functional Performance Test is to demonstrate that the entire individual system operates according to the Contract Documents.

2.7.2.2 Contractor shall operate each system through all modes of operation (occupied, unoccupied, warm-up, cool-down, etc.) for specified system responses. Contractor is required to demonstrate to Owner's satisfaction each operational sequence.

2.7.2 Development of Functional Performance Test Procedures:

2.7.2.1 The purpose of a Functional Performance Test is to verify and document compliance with the stated criteria of acceptance. Contractor or Commissioning Authority if engaged for the project shall develop specific script-type test procedures and associated test forms to verify and document proper operation of each piece of equipment and system.

2.7.2.2 Contractor or Commissioning Authority if engaged for the project shall prepare Functional Performance Test Procedure forms as part of the Commissioning Plan. Once approved by Owner, Contractor shall utilize the forms for all testing activities.

2.7.2.3 Functional Performance Test Procedure forms must include the following:

2.7.2.3.1 System and equipment or component name(s).

2.7.2.3.2 Equipment location and identification number as identified in the Equipment Matrix.

2.7.2.3.3 Unique test identification number and reference to unique Prefunctional Checklist identification numbers for the equipment.

2.7.2.3.4 Date and time of test.

2.7.2.3.5 Project name.

2.7.2.3.6 Participating parties.

2.7.2.3.7 Specific sequence of operation or other specified parameters, including performance data being verified.

2.7.2.3.8 Instructions for setting up a Functional Performance Test.

2.7.2.3.9 Specific script-type, step-by-step procedures to perform a Functional Performance Test, in a clear, sequential and repeatable format that is customized for the system being tested.

2.7.2.3.10 A Pass / Fail checkbox (or data entry box as appropriate) for clearly indicating whether or not proper performance of each part of a Functional Performance Test was achieved and space for actual readings.

2.7.2.3.11 Section for comments.

2.7.2.3.12 Signatures and date block for participant and Owner approvals.

2.7.2 Contractor shall operate, or cause to be operated, each system, device, or equipment item, both intermittently and continuously, for a duration period as indicated in the Specification(s) for each item and/or in accordance with the manufacturer's written recommendations, the Contract Documents and the Commissioning Plan.

2.7.2 Contractor shall operate each component device and each building system to the full extent of its capability, from minimum to maximum, and under automatic control and manual control.

2.7.2 Contractor and manufacturer's representatives shall supervise and coordinate adjustments and balancing of all devices and systems for proper operation prior to requesting a Functional Performance Test(s).

2.7.2.1 Where final balancing of a system is to be performed by Owner, such as final air balancing, Contractor shall provide all services indicated in the applicable Specifications and under this Section, including the following, prior to Owner's final balancing.

2.7.2.1.1 Operational verification of all component devices and the total system, including automatic controls when applicable. Operational verification includes verification that all motors, fans, dampers, and other operable devices are performing in compliance with Specifications throughout their operable range and that all devices are controlled as described in the specified sequence of operation.

2.7.2.1.2 All tabulated data, motor amperage readings, valve tag verifications, and other data required by the Specifications.

2.7.2.2 Where final balancing of a system or particular components of a system are not specifically indicated to be performed by Owner, Contractor shall provide final balancing and adjustments for operation within specified tolerances prior to Functional Performance Test of such system.

2.7.2.3 Coordination and Scheduling. Members of the Commissioning Team, including Owner, may observe Functional Performance Tests of equipment components and systems. Contractor shall provide written notice to Owner at least ten (10) days prior to Functional Performance Tests of equipment components and systems. Contractor shall notify Owner in advance of any changes to the Functional Performance Test schedule. Owner may require Contractor to reschedule Functional Performance Tests to ensure availability of Owner's representative(s).

2.7.2.4 Contractor conducts Functional Performance Tests after system Start-up and Pre-functional Checklists are satisfactorily completed and have been approved by Owner. Air balancing and water balancing shall be completed before Functional Performance Tests.

2.7.2.5 Contractor conducts Integrated System Tests after Functional Performance Tests are satisfactorily completed and have been approved by Owner.

2.8 INTEGRATED SYSTEM TESTS

2.8.1 Objective and Scope:

2.8.1.1 The objective of an Integrated System Test is to demonstrate that each system operates jointly with other systems according to the Contract Documents.

2.8.1.2 Contractor shall operate each system jointly with other systems, through selected modes of operation (fire alarm integration with HVAC, emergency power modes, equipment failures among related systems, etc.) for specified system responses. Contractor is required to demonstrate to Owner's satisfaction each operational sequence.

2.8.2 Development of Integrated System Test Procedures:

2.8.2.1 The purpose of an Integrated System Test is to verify and document compliance with the stated criteria of acceptance. Contractor or Commissioning Authority if engaged for the project shall develop specific script-type test procedures and associated test forms to verify and document proper operation of each piece of equipment and system, jointly and independently of other systems.

2.8.2.2 Contractor or Commissioning Authority if engaged for the project shall prepare Integrated System Test Procedure forms as part of the Commissioning Plan. Once approved by Commissioning Team., Contractor shall utilize the forms for all testing activities.

2.8.2.3 Integrated System Test Procedure forms must include the following.

2.8.2.3.1 System and equipment or component name(s).

2.8.2.3.2 System and equipment location and identification number as identified in the Equipment Matrix.

2.8.2.3.3 Unique test identification number and reference to unique Functional Performance Test identification numbers for the system and equipment.

2.8.2.3.4 Date and time of test.

2.8.2.3.5 Project name.

2.8.2.3.6 Participating parties.

2.8.2.3.7 Specific sequence of operation or other specified parameters, including performance data being verified.

2.8.2.3.8 Instructions for setting up an Integrated System Test.

2.8.2.3.9 Specific script-type, step-by-step procedures to perform an Integrated System Test, in a clear, sequential and repeatable format that is customized for the system being tested.

2.8.2.3.10 A Pass / Fail checkbox (or data entry box as appropriate) for clearly indicating whether or not proper performance of each part of an Integrated System Test was achieved and space for actual readings.

2.8.2.3.11 Section for comments.

2.8.2.3.12 Signatures and date block for participant and Owner approvals.

2.8.3 Contractor shall operate, or cause to be operated, each system, device, or equipment item, both intermittently and continuously, for a duration period as indicated in the Specifications for each item and in accordance with the manufacturer's written recommendations, the Contract Documents and the Commissioning Plan.

2.8.4 Coordination and Scheduling.

2.8.4.1 Members of the Commissioning Team, including Owner may observe Integrated System Tests of equipment components and systems. Contractor shall provide written notice to Owner at least fourteen (14) days prior to Integrated System Tests of equipment components and systems. Contractor shall notify Owner and A/E in advance of any

changes to the Integrated System Test schedule. Owner may require Contractor to reschedule Integrated System Tests to ensure availability of Owner's representative(s).

2.8.4.2 Contractor conducts Integrated System Tests after Functional Performance Tests are satisfactorily completed and have been approved by Owner.

2.9 DOCUMENTATION AND NON-CONFORMANCE

2.9.1 Documentation:

2.9.1.1 Contractor shall witness and document the results of all Functional Performance Tests and Integrated Systems Tests using specific procedural forms developed for that purpose or an approved electronic database program. Prior to testing, Contractor shall submit these forms to the Owner and A/E for review and approval. Contractor will include the completed, filled-out forms in the Commissioning and Close-out Manual.

2.9.2 Non-Conformance:

2.9.2.1 Contractor shall record results of Functional Performance Tests and Integrated System Tests. Contractor or Commissioning Authority if engaged for the project shall report all Deficiencies and non-conformance issues to Commissioning Team.in accordance with the procedures outlined in the Commissioning Plan.

2.9.1.2 At the sole discretion of Owner, Owner may permit Contractor to make corrections of minor Deficiencies observed during a Functional Performance Test or during an Integrated System Test. However, the Contractor must document the Deficiency and resolution on the appropriate report form.

2.9.1.3 Contractor shall make every effort to expedite testing and minimize unnecessary delays, while not compromising the integrity of a Functional Performance Test or an Integrated Systems Test.

2.9.1.4 Contractor, A/E and Owner will attempt to resolve Deficiencies in the following manner.

2.9.1.4.1 When there is no dispute about a Deficiency and Contractor accepts responsibility for correction.

2.9.1.4.1.1 Commissioning Authority if engaged for the project or Contractor documents the Deficiency and the corrective actions, and then proceeds to another test or sequence. A Deficiency report is submitted to Owner. Contractor corrects the Deficiency, completes the statement of correction form certifying that the equipment or system is ready for retesting, and sends the certification to Owner.

2.9.1.4.1.2 Contractor reschedules test with Owner.

2.9.1.4.2 When there is a dispute about whether or not the test indicates a Deficiency or the Contractor's responsibility for correction of the apparent Deficiency.

2.9.1.4.2.1 Commissioning Authority if engaged for the project or Contractor documents the apparent Deficiency. A Deficiency report is submitted to Owner, including the apparent Deficiency.

2.9.1.4.2.2 Contractor facilitates resolution of the Deficiency and provides recommendations to the Owner. Contractor and Owner may bring other parties into the discussions as needed. Final technical

interpretive authority is with the A/E. Final acceptance authority is with the Owner.

2.9.1.4.2.3 Contractor documents the resolution process.

2.9.1.4.2.4 If Owner and the A/E agree with Contractor's interpretation and proposed resolution, Contractor forwards response to Owner. Contractor reschedules test with Owner. Contractor must repeat this process until satisfactory performance and Owner's approval is obtained.

2.10 DEMONSTRATION AND OWNER TRAINING

2.10.1 Contractor, in coordination with Owner shall develop the Training Plan with project specific requirements for Owner Training, after reviewing the different systems to be installed and commissioned. The purpose of the Training Plan is to specifically communicate the required content and training durations required by the Owner based upon the type of equipment and the Owner's past experience.

2.10.2 Refer to Section 01 79 00 - Demonstration and Training for specific requirements.

2.11 DEFERRED TESTS

2.11.1 Deferred Tests:

2.11.1.1 Deferred Tests shall be identified in writing and shall be approved by Owner.

2.11.1.1.1 Contractor shall complete Deferred Tests as part of this Contract during the Warranty Period. Contractor shall schedule this activity with Owner. Contractor shall perform tests and document and correct Deficiencies. Owner may observe the tests and review and approve test documentation and Deficiency corrections.

2.11.1.1.2 Contractor shall incorporate final updates to the Commissioning and Close-out Manual.

2.11.1.1.3 If any check or test cannot be completed prior to Substantial Completion due to the building structure, required occupancy condition, or other condition, performance of such test may be delayed to later in the Warranty Period, upon approval of the Owner.

2.11.1.1.4 Commissioning of systems which provide Life Safety (passive or active) to the building and its occupants shall not be deferred unless occupancy is deferred.

2.12 COMMISSIONING DOCUMENTATION

2.12.1 Contractor shall compile and organize all Commissioning documentation into a Commissioning and Close-out Manual and deliver to the Owner as specified in Section 01 77 00 – Project Close-out Procedures.

2.12.2 The Commissioning and Close-out Manual submitted to Owner shall contain all Commissioning documentation, including, but not limited to:

2.12.2.1 The Commissioning Plan.

2.12.2.2 Final Baseline Schedule filtered to show only the Commissioning activities.

2.12.2.3 Completed Equipment Matrix.

2.12.2.4 Completed Prefunctional Checklists with all required attachments,

2.12.2.5 Functional Performance Test Procedures and results.

2.12.2.6 Integrated System Test Procedures and results.

2.12.2.7 Training Plan and all supporting documentation. Refer to Section 01 79 00 – Demonstration and Training for specific requirements.

2.12.2.8 Deficiency reports and solution results.

2.12.2.9 Recommendations on continuous Commissioning, best practices, and preventive maintenance.

2.12.2.10 Refer to Section 01 77 00 – Project Close-out Procedures for additional Close-out documentation to be included in the Commissioning and Close-out Manual.

END OF SECTION 01 91 00

Attachment No. 1 – Equipment Matrix

Download an Electronic Version of the Equipment Matrix template at the following Internet Address:

https://www.mdanderson.org/content/dam/mdanderson/documents/about-md-anderson/about-us/doing-business/owners-design-guidelines/supplemental-resources/Equipment%20Matrix%20Template.xlsx

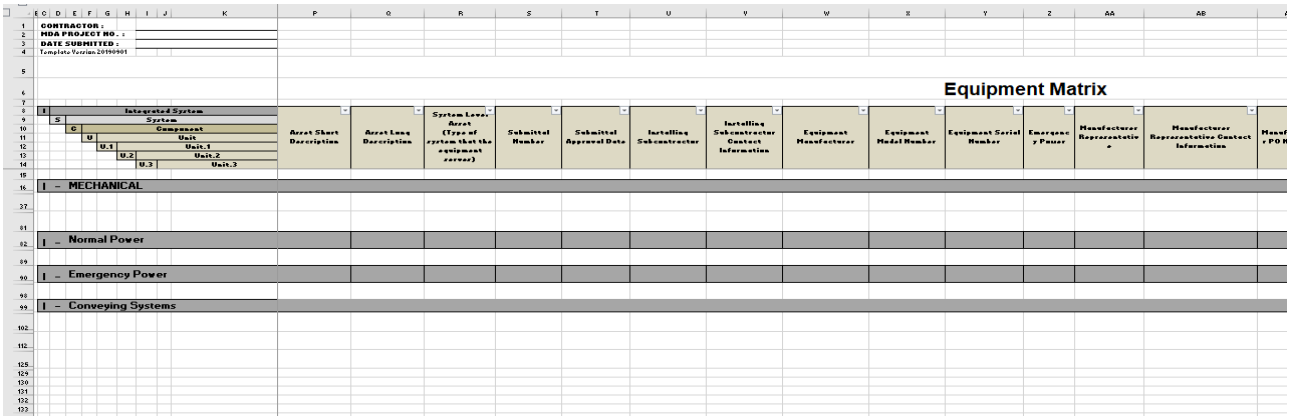

CONTRACTOR :
MDA PROJECT NO. :
DATE SUBMITTED :
Template Version 20190901

Equipment Matrix

I Integrated System
S System
C Component
U Unit
U.1 Unit.1
U.2 Unit.2
U.3 Unit.3

Asset Short Description	Asset Long Description	System Level Asset (Type of system that the equipment serves)	Submittal Number	Submittal Approval Date	Installing Subcontractor	Installing Subcontractor Contact Information	Equipment Manufacturer	Equipment Model Number	Equipment Serial Number	Emergency Power	Manufacturer Representative	Manufacturer Representative Contact Information	Manufacturer PO Number

I – MECHANICAL

I – Normal Power

I – Emergency Power

I – Conveying Systems

FOR MDACC USE ONLY. DELETE THIS PAGE BEFORE ISSUING DOCUMENTS.

DOCUMENT REVISION HISTORY

Issue	Date	Revision Description	Author
	20190301	**Original Issuance**	
Rev. 1	**20190901**	**Revisions per Pouyan Layegh, EHSSEM to this document and Equipment Matrix template from Improve FM and approved by MSC teams. Origin of yellow highlighted areas on tabs 2 and 3 are unknown.**	**P. Layegh, EHSSEM**
Rev. 2	**20190904**	**Additional revisions after format review.**	**Fitzgerald**
Rev. 3	**20191010**	**Removed Header Title block and corrected page formatting issues.**	**B. Ogle**
Rev. 4	**20200820**	**Further defined Section 1.6 Equipment Matrix submissions, from Equipment Matric Review Meetings. Also edited trending verbiage to further define the definition of trending data of 14 days prior to beginning related functional performance tests. Added 1.5.3.11- Review of trends.**	**B.Ogle, Victor Juel, Conrado Cane**
Rev. 5			

EXHIBIT C

List of Drawings, Specifications Addenda, details and other documents developed by the Project Architect Engineer that describe the Project with the date they were issued.

EXHIBIT C – List of Design Documents
DRAWINGS

DWG/ Spec. No.	Title	Construction Issuance Date
ARCHITECTURAL		
A0.00	COVER	08.26.2020
A0.01	SYMBOLS, SHEET INDEX	08.26.2020
A0.02	GENERAL NOTES	08.26.2020
A0.03	LIFE SAFETY PLAN	08.26.2020
A0.10	DEMOLITION PLAN	08.26.2020
A0.20	DEMOLITION RCP	08.26.2020
A2.00	FLOOR PLAN	08.26.2020
A2.10	REFLECTED CEILING PLAN	08.26.2020
A2.20	MEP COORDINATION PLAN	08.26.2020
A2.50	ENLARGED PLANS	08.26.2020
A5.01	FINISH SCHEDULES	08.26.2020
A5.02	DOOR SCHEDULE	08.26.2020
A5.09	INTERIOR PENETRATION AND INFILL DETAILS	08.26.2020
A5.30	PARTITION TYPES	08.26.2020
A5.31	TYPICAL PARTITION DETAILS	08.26.2020
A5.40	UL LISTINGS	08.26.2020
A7.01	INTERIOR ELEVATIONS	08.26.2020
A7.02	INTERIOR ELEVATIONS	08.26.2020
A7.04	RESTROOM ELEVATIONS	08.26.2020
A7.10	MILLWORK DETAILS	08.26.2020
A7.11	CEILING DETAILS	08.26.2020
MECHANICAL		
M0.00	MECHANICAL SYMBOLS AND ABBREVIATIONS	08.26.2020
M1.03	MECHANICAL LEVEL 3 DEMOLITION PLAN	08.26.2020
MP1.03	MECHANICAL LEVEL 3 DEMOLITION PIPING PLAN	08.26.2020
M1.0R	MECHANICAL ROOF LEVEL DEMOLITION PLAN	08.26.2020
M2.03	MECHANICAL LEVEL 3 HVAC PLAN	08.26.2020
M2.0R	MECHANICAL ROOF LEVEL HVAC PLAN	08.26.2020
MP3.03	MECHANICAL LEVEL 3 PIPING PLAN	08.26.2020
M4.01	MECHANICAL BASEMENT ENLARGED PLANS	08.26.2020
M5.01	MECHANICAL DETAILS	08.26.2020
M5.02	MECHANICAL DETAILS	08.26.2020

M5.03	MECHANICAL DETAILS	08.26.2020
M6.01	MECHANICAL RISER DIAGRAM	08.26.2020
M7.01	MECHANICAL CONTROL DIAGRAMS	08.26.2020
M7.02	MECHANICAL CONTROL DIAGRAMS	08.26.2020
M7.03	MECHANICAL CONTROL DIAGRAMS	08.26.2020
M7.04	MECHANICAL CONTROL DIAGRAMS	08.26.2020
M8.01	MECHANICAL SCHEDULES	08.26.2020
M8.02	MECHANICAL SCHEDULES	08.26.2020
	ELECTRICAL	
E0.00	ELECTRICAL SYMBOLS AND ABBREVIATIONS	08.26.2020
E1.03	ELECTRICAL DEMOLITION PLAN LEVEL 3	08.26.2020
E2.03	ELECTRICAL LIGHTING PLAN LEVEL 3	08.26.2020
E3.03	ELECTRICAL POWER PLAN LEVEL 3	08.26.2020
E4.03	ELECTRICAL POWER MECHANICAL PLAN LEVEL 3	08.26.2020
E4.04	ELECTRICAL POWER MECHANICAL PLAN BASEMENT	08.26.2020
E5.03	ELECTRICAL FIRE ALARM PLAN LEVEL 3	08.26.2020
E7.01	ELECTRICAL DETAILS	08.26.2020
E8.01	ELECTRICAL RISER DIAGRAMS	08.26.2020
E9.01	ELECTRICAL SCHEDULES	08.26.2020
	PLUMBING	
P0.00	PLUMBING SYMBOLS AND ABBREVIATIONS	08.26.2020
P1.03	PLUMBING LEVEL 3 DEMOLITION PLAN	08.26.2020
P2.03	PLUMBING LEVEL 3 PIPING PLAN	08.26.2020
P6.01	PLUMBING SCHEDULES AND DETAILS	08.26.2020
	TELECOMMUNICATION	
T0.00	TELECOM INDEX	08.26.2020
T1.00	TELECOM RISER DIAGRAM	08.26.2020
T1.01	TELECOM GROUDING DIAGRAM	08.26.2020
T2.00	LEVEL 3 - TELECOM FLOOR PLAN	08.26.2020
T3.00	LEVEL 3 TELECOM REFLECTED CEILING PLAN	08.26.2020
T4.00	ENLARGED IDF	08.26.2020
T5.00	TELECOM DETAILS	08.26.2020
	AUDIO/ VISUAL	
TA0.00	AUDIO VISUAL INDEX	08.26.2020
TA2.00	LEVEL 3 AUDIO VISUAL INDEX	08.26.2020
TA5.00	AUDIO VISUAL DETAILS	08.26.2020
	SECURITY	
TY0.00	SECURITY INDEX	08.26.2020

TY2.00	LEVEL 3 - SECURITY FLOOR PLAN	08.26.2020
TY3.00	LEVEL 3 - SECURITY REFLECTED CEILING PLAN	08.26.2020
TY5.00	SECURITY DETAILS	08.26.2020
TY5.01	SECURITY DETAILS	08.26.2020

(Continued) EXHIBIT C – List of Design Documents
SPECIFICATIONS

DWG/ Spec. No.	Title	Construction Issuance Date
PROCUREMENT AND CONTRACTING REQUIREMENTS GROUP		
	UNIFORM GENERAL CONDITIONS FOR UNIVERSITY OF TEXAS SYSTEM BUILDING CONSTRUCTION CONTRACTS	08.26.2020
00 25 00	OWNERS SPECIAL CONDITIONS	08.26.2020
00 25 00 A	ATTACHMENT "A"-MINIMUM WAGE RATE DETERMINATION	08.26.2020
00 25 00 B	ATTACHMENT "B"-FACILITIES PLANNED UTILITY OUTAGES POLICY	08.26.2020
00 25 00 C	ATTACHMENT "C"-PROJECT SIGN LAYOUT	08.26.2020
SPECIFICATIONS GROUP		
01 31 00	PROJECT ADMINISTRATION	08.26.2020
01 32 00	PROJECT PLANNING AND SCHEDULING	08.26.2020
01 35 16	ALTERATION PROJECT PROCEDURES	08.26.2020
01 35 23	PROJECT SAFETY REQUIREMENTS	08.26.2020
01 35 25	OWNER SAFETY REQUIREMENTS	08.26.2020
01 35 25 A	ATTACHMENT "A" MAINTAINING INDOOR AIR QUALITY DURING CONSTRUCTION AND MAINTENANCE ACTIVITIES POLICY	08.26.2020
01 45 00	PROJECT QUALITY CONTROL	08.26.2020
01 57 23	TEMPORARY STORM WATER POLLUTION CONTROL	08.26.2020
01 57 25	DUST CONTROL PLAN	08.26.2020
01 77 00	PROJECT CLOSEOUT PROCEDURES	08.26.2020
01 78 39	PROJECT RECORD DOCUMENTS	08.26.2020
01 78 46	MAINTENANCE MATERIALS	08.26.2020
01 79 00	DEMONSTRATION AND TRAINING	08.26.2020
01 89 23	SITE HVAC UTILITIES PERFORMANCE REQUIREMENTS	08.26.2020
01 91 00	GENERAL COMMISSIONING REQUIREMENTS	08.26.2020
DIVISON 02 - EXISTING CONDITIONS		
02 41 19	SELECTIVE DEMOLITION	08.26.2020
DIVISION 03 - CONCRETE		
03 54 16	HYDRAULIC CEMENT UNDERLAYMENT	08.26.2020

DIVISION 05 - METALS		
05 50 00	METAL FABRICATIONS	08.26.2020
DIVISION 06 - WOOD, PLASTICS AND COMPOSITES		
06 10 00	MISCELLANEOUS CARPENTRY	08.26.2020
06 41 16	PLASTIC LAMINATE CLAD ARCHITECTURAL CABINETS	08.26.2020
06 61 13	SOLID SURFACE COUNTERTOP FABRICATIONS	08.26.2020
06 61 15	QUARTZ AGGLOMERATE COUNTERTOP FABRICATIONS	08.26.2020
DIVISION 07 - THERMAL AND MOISTURE PROTECTION		
07 84 13	PENETRATION FIRESTOPPING	08.26.2020
07 92 00	JOINT SEALANTS	08.26.2020
DIVISION 08 - OPENINGS		
08 12 13	HOLLOW METAL FRAMES	08.26.2020
08 12 16	ALUMINUM FRAMES	08.26.2020
08 14 16	FLUSH WOOD DOORS	08.26.2020
08 31 14	DRYWALL CEILING ACCESS DOORS	08.26.2020
08 71 11	FINISH HARDWARE	08.26.2020
08 80 00	GLASS AND GLAZING	08.26.2020
DIVISION 09 - FINISHES		
09 05 65	PREINSTALLATION TESTING FOR FLOORING	08.26.2020
09 21 16	GYPSUM BOARD SHAFT ASSEMBLIES	08.26.2020
09 22 16	NON-STRUCTURAL METAL FRAMING	08.26.2020
09 29 00	GYPSUM DRYWALL	08.26.2020
09 30 00	TILE	08.26.2020
09 51 13	ACOUSTICAL PANEL CEILINGS	08.26.2020
09 61 16	CONCRETE FLOOR SEALING	08.26.2020
09 65 13	RESILIENT BASE AND ACCESSORIES	08.26.2020
09 65 18	RESILIENT SHEET FLOORING	08.26.2020
09 68 13	TILE CARPETING	08.26.2020
09 80 00	ACOUSTICAL TREATMENT	08.26.2020
09 91 00	PAINTING	08.26.2020
DIVISION 10 - SPECIALTIES		
10 11 00	VISUAL DISPLAY UNITS	08.26.2020
10 21 13	PHENOLIC CORE TOILET COMPARTMENTS	08.26.2020
10 26 00	WALL AND CORNER GUARDS	08.26.2020
10 28 13	TOILET AND BATH ACCESSORIES	08.26.2020
10 44 00	FIRE EXTINGUISHER CABINETS AND ACCESSORIES	08.26.2020
DIVISION 12 - FURNISHINGS		

12 24 13	ROLLER SHADES	08.26.2020
DIVISION 20 - COMMON FIRE SUPPRESSION, PLUMBING AND HVAC REQUIREMENTS		
20 01 00	BASIC FIRE SUPPRESSION, PLUMBING AND HVAC REQUIREMENTS	08.26.2020
20 05 13	MOTORS	08.26.2020
20 05 16	PIPING EXPANSION COMPENSATION	08.26.2020
20 05 29	SUPPORTS AND SLEEVES	08.26.2020
20 05 48	VIBRATION ISOLATION	08.26.2020
20 05 53	PIPING AND EQUIPMENT IDENTIFICATION	08.26.2020
20 07 16	EQUIPMENT INSULATION	08.26.2020
20 07 19	PIPING INSULATION	08.26.2020
20 08 00	FIRE SUPPRESSION, PLUMBING AND HVAC SYSTEM COMM.	08.26.2020
DIVISION 21 - FIRE SUPPRESSION		
21 10 13	WET STANDPIPE AND SPRINKLER SYSTEMS	08.26.2020
21 13 16	PREACTION SPRINKLER SYSTEM	08.26.2020
DIVISION 22 - PLUMBING		
22 10 00	PLUMBING PIPING	08.26.2020
22 10 30	PLUMBING SPECIALTIES	08.26.2020
22 20 23	NATURAL GAS PIPING	08.26.2020
22 40 00	PLUMBING FIXTURES	08.26.2020
22 60 53	LABORATORY VACUUM AND GAS PIPING	08.26.2020
22 66 53	LABORATORY WASTE AND VENT PIPING	08.26.2020
DIVISION 23 - HEATING, VENTILATING, AND AIRE CONDITIONING		
23 05 93	SYSTEM TESTING, ADJUSTING AND BALANCING	08.26.2020
23 07 13	DUCTWORK INSULATION	08.26.2020
23 21 13	HYDRONIC PIPING	08.26.2020
23 21 30	HYDRONIG SPECIALTIES	08.26.2020
23 31 00	DUCTWORK INSULATION	08.26.2020
23 33 00	DUSCTWORK ACCESSORIES	08.26.2020
23 34 23	HVAC FANS	08.26.2020
23 36 00	AIR TERMINAL UNITS	08.26.2020
23 37 00	AIR OUTLETS AND INLETS	08.26.2020
23 40 00	FILTERS	08.26.2020
DIVISION 25 - INTEGRATED AUTOMATION		
25 00 10	BUILDING AUTOMATION SYSTEMS (BAS) GENERAL - RETROFIT	08.26.2020

25 11 10	BAS BASIC MATERIALS, INTERFACE DEVICES, AND SENSORS-RETROFIT	08.26.2020
25 11 19	BAS OPERATOR INTERFACES - RETROFIT	08.26.2020
25 14 10	BAS FIELD PANELS - RETROFIT	08.26.2020
25 15 10	BAS SOFTWARE AND PROGRAMMING - RETROFIT	08.26.2020
25 30 10	BAS COMMUNICATION DEVICES-RETROFIT	08.26.2020
DIVISION 26 - ELECTRICAL		
26 01 00	BASIC ELECTRICAL REQUIREMENTS	08.26.2020
26 05 19	CABLE, WIRE AND CONNECTORS, 600 VOLT	08.26.2020
26 05 33	RACEWAYS, CABLE TRAYS, AND BOXES	08.26.2020
26 09 23	LIGHTING CONTROL DEVICES	08.26.2020
26 27 26	WIRING DEVICES	08.26.2020
26 28 13	FUSES, 600 VOLT	08.26.2020
26 28 17	MOTOR AND CIRCUIT DISCONNECTS	08.26.2020
26 29 14	MOTOR STARTERS	08.26.2020
26 51 00	LIGHTING FIXTURES	08.26.2020
DIVISION 27 - COMMUNICATIONS		
27 00 00	COMMUNICATIONS	08.26.2020
27 05 26	GROUNDING AND BONDING FOR COMMUNICATIONS SYSTEMS	08.26.2020
27 05 28	PATHWAYS FOR COMMUNICATIONS SYSTEMS	08.26.2020
27 05 53	IDENTIFICATION FOR LOW-VOLTAGE CABLES	08.26.2020
27 11 00	COMMUNICATIONS EQUIPMENT ROOM FITTINGS	08.26.2020
27 13 00	COMMUNICATIONS BACKBONE CABLING	08.26.2020
27 15 00	COMMUNICATIONS HORIZONTAL CABLING	08.26.2020
27 21 33	DATA COMMUNICATIONS WI-FI ACCESS POINTS	08.26.2020
27 40 00	AUDIO VIDEO SYSTEMS	08.26.2020
DIVISION 28 - ELECTRONIC SAFETY AND SECURITY		
28 00 00	ELECTRONIC SAFETY SECURITY	08.26.2020
28 10 00	ELECTRONIC ACCESS CONTROL	08.26.2020
28 20 00	ELECTRONIC SURVELLANCE	08.26.2020
28 30 00	FIRE ALARM AND SMOKE DETECTOR SYSTEMS	08.26.2020

EXHIBIT D

Rider 104-C Policy on Utilization Historically Underutilized Businesses

THE UNIVERSITY OF TEXAS MD ANDERSON CANCER CENTER
November 2018

RIDER 104-C

POLICY ON UTILIZATION HISTORICALLY UNDERUTILIZED BUSINESSES

Building Construction

THE UNIVERSITY OF TEXAS
MD Anderson Cancer Center
Making Cancer History®

The University of Texas MD Anderson Cancer Center
HUB and Federal Small Business Program
Policy on Utilization of Historically Underutilized Businesses (HUBs)

CONTENTS

- Policy on Utilization of Historically Underutilized Businesses (HUBs) — Page 3
- Summary of Requirements / Historically Underutilized Business (HUBs) Subcontracting Plan — Page 4-6
- HUB Subcontracting Plan (HSP) Quick Checklist — Page 7
- Letter of Transmittal for Vendor Services — Page 8
- Letter of HUB Commitment *(indefinite duration/indefinite quantity contracts)* — Page 9
- HUB Subcontracting Plan (HSP) — Page 10-16
- Section 2 (Good Faith Effort – Subcontractor Selection) — Page 11-12
- Self-Performance Justification — Page 13
- HSP Good Faith Effort – Method A (Attachment A) — Page 14
- HSP Good Faith Effort – Method B (Attachment B) — Page 15-16
- HUB Subcontracting Opportunity Notification Form — Page 17
- HUB Subcontracting Plan Prime Contractor Progress Assessment Report (Required of successful respondent for payment requests only) — Page 18

The University of Texas MD Anderson Cancer Center
HUB and Federal Small Business Program

POLICY ON UTILIZATION OF HISTORICALLY UNDERUTILIZED BUSINESSES (HUBs)

Introduction

In accordance with the Texas Government Code, Sections 2161.181-182 and Title 34, Section 20.284 of the Texas Administrative Code (TAC), The Board of Regents of the University of Texas System, acting through The University of Texas MD Anderson Cancer Center's HUB and Federal Small Business Program, shall make a good faith effort to utilize Historically Underutilized Businesses (HUBs) in contracts for construction services, including professional and consulting services; and commodities contracts. The HUB Rules promulgated by the Texas Comptroller of Public Accounts (the "Texas Comptroller"), set forth in 34 TAC Sections 20.281-20.298, encourage the use of HUBs by implementing these policies through race-, ethnic- and gender-neutral means.

The purpose of the HUB Program is to promote full and equal business opportunities for all businesses in State contracting in accordance with the following goals as specified in the State of Texas Disparity Study:

- **11.2% for heavy construction other than building contracts;**
- **21.1% for all building construction, including general contractors and operative builders contracts:**
- **32.9% for all special trade construction contracts;**
- **23.7% for professional services contracts**
- **26% for all other services contracts, and**
- **21.1% for commodities contracts.**

The University of Texas MD Anderson Cancer Center (MD Anderson) shall make a good faith effort to meet or exceed these goals to assist HUBs in receiving a portion of the total contract value of all contracts that MD Anderson expects to award in a fiscal year. MD Anderson may achieve the annual program goals by contracting directly with HUBs or indirectly through subcontracting opportunities in accordance with the Texas Government Code, Chapter 2161, Subchapter F.

SUMMARY OF REQUIREMENTS
Historically Underutilized Business (HUBs) Subcontracting Plan

It is the policy of The University of Texas MD Anderson Cancer Center and each of its component institutions, to promote and encourage contracting and subcontracting opportunities for Historically Underutilized Businesses (HUBs) in all contracts. Accordingly, The University of Texas MD Anderson Cancer Center has adopted Rider **104-C, Policy on Utilization of Historically Underutilized Businesses**. The Policy applies to all contracts with an expected value of $100,000 or more. The University of Texas MD Anderson Cancer Center is the contracting authority.

1. In all contracts for professional services, contracting services, and/or commodities with an expected value of $100,000 or more, The University of Texas MD Anderson Cancer Center ("MD Anderson") will indicate in the purchase solicitation (e.g. RFQ, RFP, or CSP) whether or not MD Anderson has determined that subcontracting opportunities are probable in connection with the contract. A HUB Subcontracting Plan is a required element of the architect, contractor or vendor Response to the purchase solicitation. The HUB Subcontracting Plan shall be developed and administered in accordance with the Policy. **Failure to submit a required HUB Subcontracting Plan will result in rejection of the Response.**

2. If subcontracting opportunities are probable, MD Anderson will declare such probability in its invitations for bids, requests for proposals, or other purchase solicitation documents, and shall require submission of the appropriate HUB Subcontracting Plan with the Response.
   a. When subcontracting opportunities are probable, and the Respondent proposes to subcontract any part of the work, the Respondent shall submit a **HUB Subcontracting Plan as prescribed by the Texas Comptroller** identifying subcontractors [**[34 TAC §20.285 (d) (1)(A)(B)(C)(D) (i)(ii)(iii)(2)(3)(A)(B)(C)(D)(E)(F)(4)(A)(B)].**

   b. When subcontracting opportunities are probable, but the Respondent can perform such opportunities with its employees and resources, the Respondent's HUB Subcontracting Plan shall include **the Self Performance HUB Subcontracting Plan, Section 3 – Self Performance Justification as the HUB Subcontracting Plan (HSP). [34 TAC §20.285 (d)(5)(A)(B)(C)(D)].**

3. If subcontracting opportunities are not probable, MD Anderson will declare such probability in its invitations for bids, requests for proposals, or other purchase solicitation documents and shall require submission of the appropriate HUB Subcontracting Plan with the Response.
   a. When subcontracting opportunities are not probable, and the Respondent proposes to perform all of the work with its employees and resources, the Respondent shall submit a HUB Subcontracting Plan that includes **the Self Performance HUB Subcontracting Plan, Section 3 – Self Performance Justification as the HUB Subcontracting Plan (HSP).**
   b. When subcontracting opportunities are not probable, but the Respondent proposes to subcontract any part of the work, the Respondent shall submit a **HUB Subcontracting Plan as prescribed by the Texas Comptroller** identifying subcontractors.

4. Respondents shall follow, but are not limited to, procedures listed in the Policy when developing a HUB Subcontracting Plan.

5. **Competitive Sealed Proposals (CSPs)** Respondents shall submit a HUB Subcontracting Plan (packaged separately). HUB plans are due at the time of the proposal.

6. In making a determination whether a good faith effort has been made in the development of the required HUB Subcontracting Plan, MD Anderson shall follow the procedures listed in the Policy. If accepted by the University, the HUB Subcontracting Plan shall become a provision of the Respondent's contract with The University of Texas MD Anderson Cancer Center. ***Revisions necessary to clarify and enhance information submitted in the original HUB subcontracting plan may be made in an effort to determine good faith effort***. **Any revisions after the submission of the HUB Subcontracting Plan shall be approved by the HUB Coordinator**.

7. **D/B and CM @ Risk Responses:** Respondents to a "design build" or "construction manager-at-risk" purchase solicitation shall include the Letter of HUB Commitment in their Response attesting that the Respondent has read and understands the Policy on Historically Underutilized Businesses (HUBs), and a HUB Subcontracting Plan for all preconstruction and construction services includes **HUB Subcontracting Plan as prescribed by the Texas Comptroller specific to construction services identifying first, second and third tier subcontractors.** Respondents proposing to perform Part I services with their own resources and employees shall submit, as part of their HSP, **the Self Performance Justification.**

8. **D/B and CM @ Risk HUB Contract Requirements:** Contractors engaged under design-build and construction manager-at-risk contracts shall submit a HUB Subcontracting Plan for all Construction Phase Services, and, must further comply with the requirements of this Policy by developing and submitting a HUB Subcontracting Plan for each bid package issued in buying out the guaranteed maximum or lump sum price of the Project. The HUB Subcontracting Plans shall identify first, second and third tier subcontractors.

9. The University of Texas MD Anderson Cancer Center shall reject any Response that does not include a fully completed HUB Subcontracting Plan, as required. **An incomplete HUB Subcontracting Plan is considered a material failure to comply with the solicitation for proposals.**

10. Changes to the HUB Subcontracting Plan. Once a Respondent's HUB Subcontracting Plan is accepted by MD Anderson and becomes a provision of the contract between Respondent and U. T. System, the Respondent can only change that HUB Subcontracting Plan if (a) the Respondent complies with 34 TAC Section 20.285; (b) the Respondent provides its proposed changes to MD Anderson for review; (c) MD Anderson(including U. T. System's HUB Coordinator) approves Respondent's proposed changes to its HUB Subcontracting Plan; and (d) MD Anderson and the Respondent amend their contract (via a writing signed by authorized officials of both parties) in order to replace the contract's existing HUB Subcontracting Plan with a revised HUB Subcontracting Plan containing the changes approved by U. T. System.

11. Expansion of Work. If, after entering into a contract with a Respondent as a result of a purchase solicitation subject to the Policy, MD Anderson wishes to expand the scope of work that the Respondent will perform under that contract through a change order or any other contract amendment (the "Additional Work"), MD Anderson will determine if the Additional Work contains probable subcontracting opportunities not identified in the initial purchase solicitation for that contract. If MD Anderson determines that probable subcontracting opportunities exist for the Additional Work, then the Respondent must submit to MD Anderson an amended HUB Subcontracting Plan covering those opportunities that complies with the provisions of 34 TAC Section 20.285. Such an amended HUB Subcontracting Plan must be approved by MD Anderson(including U. T. System's HUB Coordinator) before (a) the contract may be amended by MD Anderson and the Respondent to include the Additional Work and the amended HUB Subcontracting Plan and (b) the Respondent performs the Additional Work. If a Respondent subcontracts any of the additional subcontracting opportunities identified by MD Anderson for any Additional Work (i) without complying with 34 TAC Section 20.285 or (ii) before MD Anderson and that Respondent amend their contract to include a revised HUB Subcontracting Plan that authorizes such subcontracting, then the Respondent will be deemed to be in breach of its contract with U. T. System. As a result of such breach, MD Anderson will be entitled to terminate its contract with the Respondent, and the Respondent will be subject to any remedial actions provided by Texas law, including those set forth in Chapter 2161, Texas Government Code, and 34 TAC Section 20.285. University may report a Respondent's nonperformance under a contract between that Respondent and MD Anderson to the Texas Comptroller in accordance with 34 TAC Sections 20.101 through 20.108.

12. A Response may state that the Respondent intends to perform all the subcontracting opportunities with its own employees and resources in accordance with the Policy. However, if such a Respondent enters into a contract with MD Anderson as a result of such a Response but later desires to subcontract any part of the work set forth in that contract, before the Respondent subcontracts such work it must first change its HUB Subcontracting Plan in accordance with the provisions of Section 10 above.

13. The University of Texas MD Anderson Cancer Center shall require a professional services firm, contractor or vendor to whom a contract has been awarded to report the identity and the amount paid to its subcontractors on a monthly basis using **a HUB Subcontracting Plan (HSP) Prime Contractor Progress Assessment Report (PAR)** as a condition for payment.

14. If The University of Texas MD Anderson Cancer Center determines that the successful Respondent failed to implement an approved HUB Subcontracting Plan in good faith, MD Anderson, in addition to any other remedies, may report nonperformance to the Texas Comptroller in accordance with 34 TAC, Section 20.14, (g)(1) related remedies of nonperformance to professional services firms, contractor, and vender implementation of the HUB Subcontracting Plan.

15. In the event of any conflict between this "Summary of Requirements" and the remainder of the HUB Policy, the remainder of the HUB Policy will control.

16. These requirements, including the attachments referred to above, may be downloaded over the Internet at http://www.mdanderson.org/bids. For additional information contact the HUB and Federal Small Business Program Office of The University of Texas MD Anderson Cancer Center at 713-745-8300.

HUB Subcontracting Plan (HSP)

QUICK CHECKLIST

While this HSP Quick Checklist is being provided to merely assist you in readily identifying the sections of the HSP form that you will need to complete, it is very important that you adhere to the instructions in the HSP form and instructions provided by the contracting agency.

➤ **If you will be awarding all of the subcontracting work you have to offer under the contract to only Texas certified HUB vendors, complete:**

- ☐ Section 1 - Respondent and Requisition Information
- ☐ Section 2 a. - Yes, I will be subcontracting portions of the contract.
- ☐ Section 2 b. - List all the portions of work you will subcontract, and indicate the percentage of the contract you expect to award to Texas certified HUB vendors.
- ☐ Section 2 c. - Yes
- ☐ Section 4 - Affirmation
- ☐ GFE Method A (Attachment A) - Complete an Attachment A for each of the subcontracting opportunities you listed in Section 2 b.

➤ **If you will be subcontracting any portion of the contract to Texas certified HUB vendors and Non-HUB vendors, and the aggregate percentage of all the subcontracting work you will be awarding to the Texas certified HUB vendors with which you do not have a *continuous contract** in place for more than five (5) years *meets or exceeds* the HUB Goal the contracting agency identified in the "Agency Special Instructions/Additional Requirements", complete:**

- ☐ Section 1 - Respondent and Requisition Information
- ☐ Section 2 a. - Yes, I will be subcontracting portions of the contract.
- ☐ Section 2 b. - List all the portions of work you will subcontract, and indicate the percentage of the contract you expect to award to Texas certified HUB vendors and Non-HUB vendors.
- ☐ Section 2 c. - No
- ☐ Section 2 d. - Yes
- ☐ Section 4 - Affirmation
- ☐ GFE Method A (Attachment A) - Complete an Attachment A for each of the subcontracting opportunities you listed in Section 2 b.

➤ **If you will be subcontracting any portion of the contract to Texas certified HUB vendors and Non-HUB vendors or only to Non-HUB vendors, and the aggregate percentage of all the subcontracting work you will be awarding to the Texas certified HUB vendors with which you do not have a *continuous contract** in place for more than five (5) years *does not meet or exceed* the HUB Goal the contracting agency identified in the "Agency Special Instructions/Additional Requirements", complete:**

- ☐ Section 1 - Respondent and Requisition Information
- ☐ Section 2 a. - Yes, I will be subcontracting portions of the contract.
- ☐ Section 2 b. - List all the portions of work you will subcontract, and indicate the percentage of the contract you expect to award to Texas certified HUB vendors and Non-HUB vendors.
- ☐ Section 2 c. - No
- ☐ Section 2 d. - No
- ☐ Section 4 - Affirmation
- ☐ GFE Method B (Attachment B) - Complete an Attachment B for each of the subcontracting opportunities you listed in Section 2 b.

➤ **If you will not be subcontracting any portion of the contract and will be fulfilling the entire contract with your own resources (i.e., employees, supplies, materials and/or equipment, complete:**

- ☐ Section 1 - Respondent and Requisition Information
- ☐ Section 2 a. - No, I will not be subcontracting any portion of the contract, and I will be fulfilling the entire contract with my own resources
- ☐ Section 3 - Self Performing Justification
- ☐ Section 4 - Affirmation

***Continuous Contract:** Any existing written agreement (including any renewals that are exercised) between a prime contractor and a HUB vendor, where the HUB vendor provides the prime contractor with goods or service, to include under the same contract for a specified period of time. The frequency the HUB vendor is utilized or paid during the term of the contract is not relevant to whether the contract is considered continuous. Two or more contracts that run concurrently or overlap one another for different periods of time are considered by CPA to be individual contracts rather than renewals or extensions to the original contract. In such situations the prime contractor and HUB vendor are entering (have entered) into "new" contracts.*

(RESPONDENT'S BUSINESS LETTERHEAD)

Date

MD Anderson (only)
Please check:

□ New HUB plan

□ Competitive Sealed Proposal

□ Building Construction

□ Job Order Contract (JOC)

□ Change Order

□ Other:

Mrs. Marian Nimon
Associate Director, HFSB Program
The University of Texas MD Anderson Cancer Center
PO Box 301407 Unit 1680
Houston, TX 77230-1407

Re: Historically Underutilized Business Plan for (Project Title)
RFX/PO Number: _____

Dear Mrs. Nimon,

In accordance with the requirements outlined in the specification section "HUB Participation Program," I am pleased to forward this HUB Subcontracting Plan as an integral part of our response in connection with your invitation for Request for Qualifications (Request for Proposal if Building Construction or Job Order Contract) referencing the above project.

I have read and understand The University of Texas MD Anderson Cancer Center Policy on Utilization of Historically Underutilized Businesses (HUBs). I also understand the State of Texas Annual Procurement Goal according to 34 Texas Administrative Code Section 20.284 is 21.1% for all building construction, including general contractors and operative builder's contracts. 32.9% for all special trade construction contracts.

This HUB Subcontracting Plan includes____Subcontracting Opportunities [*refer to Section 2, page 12* representing____(no. of subcontractors) trades with a total dollar value of_____. These figures represent a cumulative percentage of ___%, representing_____% for minority-owned HUBs and_____% for women-owned HUBs. When a HUB is owned by minority women, I have classified that HUB as minority-owned rather than women-owned.

I understand the above HUB percentages must represent Texas Comptroller HUB certification standards. For each of the listed HUB firms, I have attached a Texas Comptroller Certification document, or, if the HUB is certified by another Texas Comptroller approved certifying agency, a copy of their approved certification document.

By completion of Section 4 of the HUB Subcontracting Plan, I affirm my intent to utilize the subcontractors selected to perform the scope of work to be subcontracted.

Should we discover additional subcontractors claiming Historically Underutilized Business status during the course of this contract we will notify you of the same. In addition, if for some reason a HUB is unable to fulfill its contract with us, we will notify you immediately in order to take the appropriate steps to amend this contractual obligation.

Sincerely,

_____
Project Executive

_____
Signature

cc: Project Manager

(BUSINESS LETTERHEAD)

Letter of HUB Commitment for

Building Construction /JOC Contracts

Date

Mrs. Marian Nimon
Associate Director, HFSB Program
The University of Texas MD Anderson Cancer
Center PO Box 301407 Unit 1680
Houston, TX 77230-1407

Re: Historically Underutilized Business Plan for (Project Title)
RFX/PO Number: _____

Dear Mrs. Nimon:

In accordance with the requirements outlined in the specification section "HUB Participation Program," I am pleased to forward this Letter of HUB Commitment as an integral part of our proposal in connection with your invitation for Request for Proposals (Request for Qualifications if Building Constructions or Job Order Contract), referencing Project Number:_____.

I have read and understand The University of Texas MD Anderson Cancer Center Policy on Utilization of Historically Underutilized Businesses (HUBs).

Good Faith Effort will be documented with each bid package and will contain a completed HUB Subcontracting Plan with each bid package.

An updated HUB Plan will be submitted at the completion of each bid process along with the percent of "buyout" to date for the project. Documentation of subcontracted work and the Progress Assessment Reports will be provided with each pay request as well as to MD Anderson's HUB and Federal Small Business Program.

I will submit a completed HUB Subcontracting Plan with each package. The HSP shall consist of a Letter of Transmittal (page 8) and the HUB Subcontracting Plan (pages 11-17) identifying first, second and third tier subcontractors.

Sincerely,

_____
Contractor's Printed Name and Title

_____
Contractor's Signature

cc: Project Manager

HUB SUBCONTRACTING PLAN (HSP)

In accordance with Texas Gov't Code §2161.252, the contracting agency has determined that subcontracting opportunities are probable under this contract. Therefore, all respondents, including State of Texas certified Historically Underutilized Businesses (HUBs) must complete and submit this State of Texas HUB Subcontracting Plan (HSP) with their response to the bid requisition (solicitation).

NOTE: Responses that do not include a completed HSP shall be rejected pursuant to Texas Gov't Code §2161.252(b).

The HUB Program promotes equal business opportunities for economically disadvantaged persons to contract with the State of Texas in accordance with the goals specified in the 2009 State of Texas Disparity Study. The statewide HUB goals defined in 34 Texas Administrative Code (TAC) §20.284 are:

- *21.1 percent for all building construction, including general contractors and operative builders contracts,*
- *32.9 percent for all special trade construction contracts,*
- *23.7 percent for professional services contracts,*
- *26.0 percent for all other services contracts, and*
- *21.1 percent for commodities contracts*.

- - Agency Special Instructions/Additional Requirements - -

In accordance with 34 TAC §20.285(d)(1)(D)(iii), a respondent (prime contractor) may demonstrate good faith effort to utilize Texas certified HUBs for its subcontracting opportunities if the total value of the respondent's subcontracts with Texas certified HUBs meets or exceeds the statewide HUB goal or the agency specific HUB goal, whichever is higher. When a respondent uses this method to demonstrate good faith effort, the respondent must identify the HUBs with which it will subcontract. If using existing contracts with Texas certified HUBs to satisfy this requirement, only the aggregate percentage of the contracts expected to be subcontracted to HUBs with which the respondent ***does not*** *have a* ***continuous contract**** *in place for* ***more than five (5) years*** *shall qualify for meeting the HUB goal. This limitation is designed to encourage vendor rotation as recommended by the 2009 Texas Disparity Study.*

Building Construction HUB Goal –
21.1% Special Trade HUB Goal – 32.9%

- Respondents submitting a Competitive Sealed Proposal shall submit a HUB Subcontracting Plan (HSP) that meets the Good Faith Effort prescribed in Method A (Attachment A) or Method B (Attachment B).
- Respondents submitting Construction Manager @ Risk or Design Build delivery method (Two-step process) shall submit:
  1. Part One Pre-Construction Services – Section 3, if self-performing all pre-con services or Method A or Method B if subcontracting all or part of pre-con services.; and Letter of HUB Commitment for Construction Services (page 9).
  2. Part Two Building Construction – Method B is only acceptable Plan
- Respondents shall submit a completed HUB Subcontracting Plan (HSP) to be considered responsive. Failure to submit a completed HSP shall result in the bid, proposal or other expression of interest to be considered NON- responsive.
- HUB Subcontracting Plan (HSP) Prime Contractor Progress Assessment Report (PAR) shall be submitted monthly following award, documenting all payments to subcontractors.
- Please note that phone logs are no longer acceptable as documentation of the good faith effort. Only fax, e-mail and written correspondence are acceptable.
- Continuous Contract: Any existing written agreement (including any renewals that are exercised) between a prime contractor and a HUB vendor, where the HUB vendor, where the HUB vendor provides the prime contractor with goods or service under the same contract for a specified period of time. The frequency the HUB vendor is utilized or paid during the term of the contract is not relevant to whether the contract is considered continuous. Two or more contracts that run concurrently or overlap one another for different periods of time are considered by CPA to be individual contracts rather than renewals or extensions to the original contract. In such situations the prime contractor and HUB vendor are entering (have entered) into 'new' contracts.

SECTION 1 RESPONDENT AND REQUISITION INFORMATION

a. Respondent (Company) Name: _____ State of Texas VID #: _____

Point of Contact: _____ Phone #: _____

E-mail Address: _____ Fax #: _____

b. Is your company a State of Texas certified HUB? □ - Yes □- No

c. RFX/PO#: _____ Bid Close Date: ____/____/____
mm/dd/yyyy)

Enter your company's name here: _____ Requisition #: _____

SECTION 2 RESPONDENT'S SUBCONTRACTING INTENTIONS

After dividing the contract work into reasonable lots or portions to the extent consistent with prudent industry practices, and taking into consideration the scope of work to be performed under the proposed contract, including all potential subcontracting opportunities, the respondent must determine what portions of work, **including contracted staffing, goods and services will be subcontracted.** Note: In accordance with 34 TAC §20.282., an "Subcontractor" means a person who contracts with a prime contractor to work, to supply commodities, or to contribute toward completing work for a governmental entity.

a. Check the appropriate box (Yes or No) that identifies your subcontracting intentions:

□ - *Yes*, I will be subcontracting portions of the contract. (If *Yes*, complete Item b, of this SECTION and continue to Item c of this SECTION.)

□ - *No*, I will not be subcontracting any portion of the contract, and I will be fulfilling the entire contract with my own resources. (If *No*, continue to SECTION 3. And SECTION 4.)

b. List all the portions of work (subcontracting opportunities) you will subcontract. Also, based on the total value of the contract, identify the percentages of the contract you expect to award to Texas certified HUBs, and the percentage of the contract you expect to award to vendors that are not a Texas certified HUB (i.e., Non-HUB).

Item #	Subcontracting Opportunity Description	HUBs		Non-HUBs
		Percentage of the contract expected to be subcontracted to HUBs with which you do not have a continuous contract* in place for more than five (5) years.	Percentage of the contract expected to be subcontracted to HUBs with which you have a continuous contact* in place for more than five (5) years.	Percentage of the contract expected to be subcontracted to non-HUBs .
1		%	%	%
2		%	%	%
3		%	%	%
4		%	%	%
5		%	%	%
6		%	%	%
7		%	%	%
8		%	%	%
9		%	%	%
10		%	%	%
11		%	%	%
12		%	%	%
13		%	%	%
14		%	%	%
15		%	%	%
	Aggregate percentages of the contract expected to be subcontracted:	%	%	%

(Note: If you have more than fifteen subcontracting opportunities, a continuation sheet is available online at http://**www.comptroller.texas.gov/purchasing/vendor/hub/forms.php**)

c. Check the appropriate box (Yes or No) that indicates whether you will be using only Texas certified HUBs to perform all of the subcontracting opportunities you listed in SECTION 2, Item b.

□ - *Yes* (If *Yes*, continue to SECTION 4 and complete an "HSP Good Faith Effort - Method A (Attachment A)" for each of the subcontracting opportunities you listed.)

□- *No* (If *No*, continue to Item d, of this SECTION.)

d. Check the appropriate box (Yes or No) that indicates whether the aggregate expected percentage of the contract you will subcontract with Texas certified HUBs with which you do not have a continuous contract* in place with for more than five (5) years, meets or exceeds the HUB goal the contracting agency identified on page 1 in the "Agency Special Instructions/Additional Requirements".

□ -*Yes* (If *Yes*, continue to SECTION 4 and complete an "HSP Good Faith Effort - Method A (Attachment A)" for each of the subcontracting opportunities you listed.)

□ - *No* (If *No*, continue to SECTION 4 and complete an "HSP Good Faith Effort - Method B (Attachment B)" for each of the subcontracting opportunities you listed.)

***Continuous Contract:** Any existing written agreement (including any renewals that are exercised) between a prime contractor and a HUB vend service under the same contract for a specified period of time. The frequency the HUB vendor is utilized or paid during the term of the contract is not relevant to whe more contracts that run concurrently or overlap one another for different periods of time are considered by CPA to be individual contracts rather than renewals or exte the prime contractor and HUB vendor are entering (have entered) into "new" contracts.*

Enter your company's name here: _____ Requisition #:

SECTION 2 RESPONDENT'S SUBCONTRACTING INTENTIONS (CONTINUATION SHEET)

a. This page can be used as a continuation sheet to the HSP Form's page 2, SECTION 2, Item b. Continue listing the portions of work (subcontracting opportunities) you will subcontract. Also, based on the total value of the contract, identify the percentages of the contract you expect to award to Texas certified HUBs, and the percentage of the contract you expect to award to vendors that are not a Texas certified HUB (i.e., Non-HUB).

Item #	Subcontracting Opportunity Description	HUBs		Non-HUBs
		Percentage of the contract expected to be subcontracted to HUBs with which you do not have a continuous contract* in place for more than five (5) years.	Percentage of the contract expected to be subcontracted to HUBs with which you have a continuous contract* in place for more than five (5) years.	Percentage of the contract expected to be subcontracted to non-HUBs .
		%	%	%
		%	%	%
		%	%	%
		%	%	%
		%	%	%
		%	%	%
		%	%	%
		%	%	%
		%	%	%
		%	%	%
		%	%	%
		%	%	%
		%	%	%
		%	%	%
		%	%	%
		%	%	%
		%	%	%
		%	%	%
		%	%	%
		%	%	%
		%	%	%
		%	%	%
		%	%	%
		%	%	%
		%	%	%
	Aggregate percentages of the contract expected to be subcontracted:	%	%	%

***Continuous** Contract: Any existing written agreement (including any renewals that are exercised) between a prime contractor and a HUB vendor, where the HUB vendor provides the prime contractor with goods or service under the same contract for a specified period of time. The frequency the HUB vendor is utilized or paid during the term of the contract is not relevant to whether the contract is considered continuous. Two or more contracts that run concurrently or overlap one another for different periods of time are considered by CPA to be individual contracts rather than renewals or extensions to the original contract. In such situations the prime contractor and HUB vendor are entering (have entered) into "new" contracts.*

HSP – SECTION 2
(Continuation Sheet)

Enter your company's name here: _____ Requisition #:

SECTION 3: SELF PERFORMING JUSTIFICATION (If you responded "No" to SECTION 2, Item a, you must complete this SECTION and continue to SECTION 4.)

If you responded "No" to SECTION 2, Item a, in the space provided below **explain how** your company will perform the entire contract with its own employees, supplies, materials and/or equipment.

Provide explanation:

SECTION-4: AFFIRMATION

As evidenced by my signature below, I affirm that I am an authorized representative of the respondent listed in SECTION 1, and that the information and supporting documentation submitted with the HSP is true and correct. Respondent understands and agrees that, if awarded any portion of the requisition:

- The respondent will provide notice as soon as practical to **all** the subcontractors (HUBs and Non-HUBs) of their selection as a subcontractor for the awarded contract. The notice must specify at a minimum the contracting agency's name and its point of contact for the contract, the contract award number, the subcontracting opportunity they (the subcontractor) will perform, the approximate dollar value of the subcontracting opportunity and the expected percentage of the total contract that the subcontracting opportunity represents. A copy of the notice required by this section must also be provided to the contracting agency's point of contact for the contract no later than ten (10) working days after the contract is awarded.
- The respondent must submit monthly compliance reports (Prime Contractor Progress Assessment Report – PAR) to the contracting agency, verifying its compliance with the HSP, including the use of and expenditures made to its subcontractors (HUBs and Non-HUBs). (The PAR is available at https://www.comptroller.texas.gov/purchasing/docs/hub-forms/ProgressAssessmentReportFo.xls
- The respondent must seek approval from the contracting agency prior to making any modifications to its HSP, including the hiring of additional or different subcontractors and the termination of a subcontractor the respondent identified in its HSP. If the HSP is modified without the contracting agency's prior approval, respondent may be subject to any and all enforcement remedies available under the contract or otherwise available by law, up to and including debarment from all state contracting.
- The respondent must, upon request, allow the contracting agency to perform on-site reviews of the company's headquarters and/or work-site where services are being performed and must provide documentation regarding staffing and other resources.

Signature	Printed Name	Title	Date (mm/dd/yyyy)

REMINDER:

- If you responded "*Yes*" to SECTION 2, **Items c or d**, you must complete an "HSP Good Faith Effort - Method A (Attachment A)" for each of the subcontracting opportunities you listed in SECTION 2, Item b.
- If you responded "*No*" SECTION 2, **Items c and d**, you must complete an "HSP Good Faith Effort - Method B (Attachment B)" for each of the subcontracting opportunities you listed in SECTION 2, Item b.

HSP Good Faith Effort - Method A (Attachment A)

Enter your company's name here: _____ RFX/PO #: _____

IMPORTANT: If you responded "*Yes*" to SECTION 2, Items c or d of the completed HSP form, you must submit a completed "HSP Good Faith Effort - Method A (Attachment A)" for each of the subcontracting opportunities you listed in SECTION 2, Item b of the completed HSP form. You may photo-copy this page or download the form at ***http://www.comptroller.texas.gov/purchasing/docs/hub-forms/hub-sbcont-plan-gfe-achm-a.pdf***

SECTION A-1 SUBCONTRACTING OPPORTUNITY

Enter the item number and description of the subcontracting opportunity you listed in SECTION 2, Item b, of the completed HSP form for which you are completing this attachment.

Item #: _____ Description: _____

SECTION A-2 SUBCONTRACTOR SELECTION

List the subcontractor(s) you selected to perform the subcontracting opportunity you listed above in SECTION A-1. Also identify whether they are a Texas Certified HUB and their Texas Vendor Identification (VID) number or federal Employer Identification Number (EIN), the approximate dollar value of the work to be subcontracted, and the expected percentage of work to be subcontracted. When searching for Texas certified HUBs and verifying their HUB status, ensure that you use the State of Texas/ Centralized Master Bidders List (CMBL) – Historically Underutilized Business (HUB) Directory Search located at http://mycpa.cpa.state.tx.us/tpasscmblsearch/index.jsp. HUB status code "A" signifies that the company is a Texas certified HUB.

Company Name	Texas Certified HUB	Texas VID or federal EIN Do not enter Social Security Numbers. If you do not know their VID / EID leave their VID / EID field blank.	Approximate Dollar Amount	Expected Percentage of Contract
	○ - Yes ○ - No		$	%
	○ - Yes ○ - No		$	%
	○ - Yes ○ - No		$	%
	○ - Yes ○ - No		$	%
	○ - Yes ○ - No		$	%
	○ - Yes ○ - No		$	%
	○ - Yes ○ - No		$	%
	○ - Yes ○ - No		$	%
	○ - Yes ○ - No		$	%
	○ - Yes ○ - No		$	%
	○ - Yes ○ - No		$	%
	○ - Yes ○ - No		$	%
	○ - Yes ○ - No		$	%
	○ - Yes ○ - No		$	%
	○ - Yes ○ - No		$	%
	○ - Yes ○ - No		$	%
	○ - Yes ○ - No		$	%
	○ - Yes ○ - No		$	%

REMINDER: As specified in SECTION 4 of the completed HSP form, if you (respondent) are awarded any portion of the requisition, you are required to provide notice as soon as practical to all the subcontractors (HUBs and Non-HUBs) of their selection as a subcontractor. The notice must specify at a minimum the contracting agency's name and its point of contact for the contract, the contract award number, the subcontracting opportunity they (the subcontractor) will perform, the approximate dollar value of the subcontracting opportunity and the expected percentage of the total contract that the subcontracting opportunity represents. A copy of the notice required by this section must also be provided to the contracting agency's point of contact for the contract no later than ten (10) working days after the contract is awarded.

HSP Good Faith Effort - Method B (Attachment B)

Enter your company's name here: _____ RFX/PO #: _____

IMPORTANT: If you responded "*No*" to SECTION 2, Items c and d of the completed HSP form, you must submit a completed "HSP Good Faith Effort - Method B (Attachment B)" for each of the subcontracting opportunities you listed in SECTION 2, Item b of the completed HSP form. You may photo-copy this page or download the form at ***http:// www.comptroller.texas.gov/purchasing/docs/hub-forms/hub-sbcont-plan-gfe-achm-b.pdf***

SECTION B-1 SUBCONTRACTING OPPORTUNITY:

Enter the item number and description of the subcontracting opportunity you listed in SECTION 2, Item b, of the completed HSP form for which you are completing this attachment.

Item #: _____ Description: _____

SECTION B-2 MENTOR PROTÉGÉ PROGRAM

If respondent is participating as a Mentor in a State of Texas Mentor Protégé Program, submitting its Protégé (Protégé must be a State of Texas certified HUB) as a subcontractor to perform the subcontracting opportunity listed in SECTION B-1, constitutes a good faith effort to subcontract with a Texas certified HUB towards that specific portion of work.

Check the appropriate box (Yes or No) that indicates whether you will be subcontracting the portion of work you listed in SECTION B-1 to your Protégé.

- ○ - Yes (If *Yes*, to continue to SECTION B-4.)
- ○ - No / Not Applicable (If *No* or *Not Applicable*, continue to SECTION B-3.)

SECTION B-3 NOTIFICATION OF SUBCONTRACTING OPPORTUNITY

When completing this section you MUST comply with items a, b, c and d, thereby demonstrating your Good Faith Effort of having notified Texas certified HUBs and trade organizations or development centers about the subcontracting opportunity you listed in SECTION B-1. Your notice should include the scope of work, information regarding the location to review plans and specifications, bonding and insurance requirements, required qualifications, and identify a contact person.

When sending notice of your subcontracting opportunity, you are encouraged to use the attached HUB Subcontracting Opportunity Notice form, which is also available online at **https://www.comptroller.texas.gov/purchasing/docs/hub-forms/HUBSubcontractingOpportunityNotificationForm.pdf**

Retain supporting documentation (i.e., certified letter, fax, e-mail) demonstrating evidence of your good faith effort to notify the Texas certified HUBs and trade organizations or development centers. Be mindful that a working day is considered a normal business day of the state agency, not including weekends, federal or state holidays, or days the agency is declared closed by its executive order. The initial day the subcontracting opportunity notice is sent/provided to the HUBs and to the trade organizations or development centers is considered to be "day zero" and does not count as one of the seven (7) working days.

a. Provide written notification of the subcontracting opportunity you listed in SECTION B-1, to three (3) or more Texas certified HUBs. Unless the contracting agency specified a different time period, you must allow the HUBs at least seven (7) working days to respond to the notice prior to your submitting your bid response to the contracting agency. When searching for Texas certified HUBs, ensure that you use the State of Texas' Centralized Master Bidders List (CMBL) and Historically Underutilized Business (HUB) Search directory located at ***http://mycpa.cpa.state.tx.us/tpasscmblsearch/index.jsp***. HUB Status code "A" signifies that the company is a Texas certified HUB.

b. List the three (3) Texas certified HUBs you notified regarding the subcontracting opportunity you listed in SECTION B-1. Include the company's Vendor ID (VID) number, the date you sent notice to that company, and indicate whether it was responsive or non-responsive to your subcontracting opportunity notice.

Company Name	Texas VID (Do not enter Social Security Numbers.)	Date Notice Sent (mm/dd/yyyy)	Did the HUB Respond?
		/ /	○ - Yes ○ - No
		/ /	○ - Yes ○ - No
		/ /	○ - Yes ○ - No

c. Provide written notification of the subcontracting opportunity you listed in SECTION B-1 to two (2) or more trade organizations or development centers to assist in identifying potential HUBs by disseminating the subcontracting opportunity to their members/participants. Unless the contracting agency specified a different time period, you must provide your subcontracting opportunity notice to trade organizations or development centers at least seven (7) working days prior to submitting your bid response to the contracting agency. A list of trade organizations and development centers that have expressed an interest in receiving notices of subcontracting opportunities is available on the Statewide HUB Program's webpage at http://www.comptroller.texas.gov/purchasing/vendor/heb/resources.php.

d. Enter the name of the trade organizations or development centers you notified regarding the subcontracting opportunity you listed in SECTION B-1. Include the date when you sent notice to it and indicate if it accepted or rejected your notice.

Trade Organizations or Development Centers	Date Notice Sent (mm/dd/yyyy)	Was the Notice Accepted?
	/ /	○ - Yes ○ - No
	/ /	○ - Yes ○ - No

HSP Good Faith Effort - Method B (Attachment B) Cont.

Enter your company's name here: _____ RFX/PO #: _____

SECTION B-4 SUBCONTRACTOR SELECTION

a. Enter the item number and description of the subcontracting opportunity for which you are completing this Attachment B continuation page.

Item#:_____ Description: _____

b. List the subcontractor(s) you selected to perform the subcontracting opportunity you listed in SECTION B-1. Also identify whether they are a Texas Certified HUB and their Texas Vendor Identification (VID) number or federal Employer Identification Number (EIN), the approximate dollar value of the work to be subcontracted, and the expected percentage of work to be subcontracted. When searching for Texas certified HUBs and verifying their HUB status, ensure that you use the State of Texas/ Centralized Master Bidders List (CMBL) – Historically Underutilized Business (HUB) Directory Search located at http://mycpa.cpa.state.tx.us/tpasscmblsearch/index.jsp. HUB status code "A" signifies that the company is a Texas certified HUB.

Company Name	Texas Certified HUB	Texas VID or federal EIN Do not enter Social Security Numbers. If you do not know their VID / EID, leave their VID / EID field blank.	Approximate Dollar Amount	Expected Percentage of Contract
	○ - Yes ○ - No		$	%
	○ - Yes ○ - No		$	%
	○ - Yes ○ - No		$	%
	○ - Yes ○ - No		$	%
	○ - Yes ○ - No		$	%
	○ - Yes ○ - No		$	%
	○ - Yes ○ - No		$	%

c. If any of the subcontractors you have selected to perform the subcontracting opportunity you listed in SECTION B-1 is not a Texas certified HUB, provide written justification for your selection process (attach additional page if necessary):

REMINDER: As specified in SECTION 4 of the completed HSP form, if you (respondent) are awarded any portion of the requisition, you are required to provide notice as soon as practical to all the subcontractors (HUBs and Non-HUBs) of their selection as a subcontractor. The notice must specify at a minimum the contracting agency's name and its point of contact for the contract, the contract award number, the subcontracting opportunity it (the subcontractor) will perform, the approximate dollar value of the subcontracting opportunity and the expected percentage of the total contract that the subcontracting opportunity represents. A copy of the notice required by this section must also be provided to the contracting agency's point of contact for the contract no later than ten (10) working days after the

contract is awarded*HSP Good Faith Effort - Method B (Attachment B) Cont.*

HUB Subcontracting Opportunity Notification Form

(Rev. 11/18)

In accordance with Texas Gov't Code, Chapter 2161, each state agency that considers entering into a contract with an expected value of $100,000 or more shall, before the agency solicits bids, proposals, offers, or other applicable expressions of interest, determine whether subcontracting opportunities are probable under the contract. The state agency I have identified below in Section B has determined that subcontracting opportunities are probable under the requisition to which my company will be responding.

34 Texas Administrative Code, §20.285 requires all respondents (prime contractors) bidding on the contract to provide notice of each of their subcontracting opportunities to at least three (3) Texas certified HUBs (who work within the respective industry applicable to the subcontracting opportunity), and allow the HUBs at least seven (7) working days to respond to the notice prior to the respondent submitting its bid response to the contracting agency. In addition, at least seven (7) working days prior to submitting its bid response to the contracting agency, the respondent must provide notice of each of its subcontracting opportunities to two (2) or more trade organizations or development centers (in Texas) that serves members of groups (i.e., Asian Pacific American, Black American, Hispanic American, Native American, Woman, Service Disabled Veteran) identified in Texas Administrative Code §20.282(19)(C).

We respectfully request that vendors interested in bidding on the subcontracting opportunity identified in Section C, Item 2 reply no later than the date and time identified in Section C, Item 1. Submit your response to the point-of-contact referenced in Section A.

Section A — PRIME CONTRACTOR'S INFORMATION

Company Name: _____ State of Texas VID #: _____

Point-of-Contact: _____ Phone #: _____

E-mail Address: _____ Fax #: _____

Section B — CONTRACTING STATE AGENCY AND REQUISITION INFORMATION

Agency Name: _____

Point-of-Contact: _____ Phone #: _____

Requisition #: _____ Bid Open Date: _____ (mm/dd/yyyy)

Section C — SUBCONTRACTING OPPORTUNITY RESPONSE DUE DATE, DESCRIPTION, REQUIREMENTS AND RELATED INFORMATION

1. Potential Subcontractor's Bid Response Due Date:	**If you would like for our company to consider your company's bid for the subcontracting opportunity identified below in Item 2, we must receive your bid response no later than:** _____ On _____ **(Central Time)** **Mm/dd/yyyy** *In accordance with 34 TAC §20.285, each notice of subcontracting opportunity shall be provided to at least three (3) Texas certified HUBs, and allow the HUBs at least seven (7) working days to respond to the notice prior to submitting our bid response to the contracting agency. In addition, at least seven (7) working days prior to us submitting our bid response to the contracting agency, we must provide notice of each of our subcontracting opportunities to two (2) or more trade organizations or development centers (in Texas) that serves members of groups (i.e., Asian Pacific American, Black American, Hispanic American, Native American, Woman, Service Disabled Veteran) identified in Texas Administrative Code, §20.282(19)(C).* *(A working day is considered a normal business day of a state agency, not including weekends, federal or state holidays, or days the agency is declared closed by its executive officer. The initial day the subcontracting opportunity notice is sent/provided to the HUBs and to the trade organizations or development centers is considered to be "day zero" and does not count as one of the seven (7) working days.)*
2. Subcontracting Opportunity Scope of Work:	☐ Not Applicable
3.Required Qualifications:	☐ Not Applicable
4.Bonding/Insurance Requirements:	☐ Not Applicable
5.Location to review plans/specifications:	☐ Not Applicable

: _____

Progress Assessment Report

Effective immediately, PAR reports are to be submitted electronically.
MD Anderson's HUB Program team will notify awarded firms with procedure details.
This form must be completed and submitted to the MD Anderson each month to document compliance with your HSP.

Contract/PO Number: _____

Contracting Agency/University (mm/dd/yyyy) (Agency Use Only)

Name: _____

Contractor (Company) Name: _____ State of Texas VID #: _____

Point of Contact: _____ Phone #: _____

**It is critical to advise us if there is a change in your contact information for the report.

Reporting (Month) Period: _____ Amount Paid this Reporting Period to Contractor: $ _____

*** Reports (PARs) are due by the **5th** of the following month

Report HUB and Non-HUB Subcontractor information

Note: HUB certification status can be verified on-line at: http://mycpa.cpa.state.tx.us/tpasscmblsearch/index.jsp

Subcontractor's Name	Certified HUB? (Yes or No)	Texas VID or Federal EIN Do not enter Social Security Numbers. If you do not know their VID / EID, leave their VID / EID field blank.	Total Contract $ Amount from HSP with Subcontractor	Total $ Amount Paid This Reporting Period to Subcontractor	Total Contract $ Amount Paid to Date to Subcontractor	Object Code (Agency Use Only)
			$ -	$ -	$ -	
			$ -	$ -	$ -	
			$ -	$ -	$ -	
			$ -	$ -	$ -	
			$ -	$ -	$ -	
			$ -	$ -	$ -	
			$ -	$ -	$ -	
			$ -	$ -	$ -	
			$ -	$ -	$ -	
			$ -	$ -	$ -	
			$ -	$ -	$ -	
			$ -	$ -	$ -	
			$ -	$ -	$ -	
			$ -	$ -	$ -	
			$ -	$ -	$ -	
TOTALS:			$ -	$ -	$ -	

Sample

Signature: **Title:** **Date:**

Printed Name: **Phone No.**

Return Form To: **Marian Nimon, M.B.A., C.P.M., CPSD**
Associate Director

HFSB Program, Unit 1680
UT MD Anderson Cancer Center
PO Box 301407
Houston, TX 77230-1407 **Phone: 713-745-8352 FAX 713-745-5814**
mnimon@mdanderson.org

Check if this is the last report to be submitted for this project: ____

EXHIBIT E

Contractor's Approved HUB Subcontracting Plan

EXHIBIT F

Rider 105; Contractor's Affirmations and Warranties

RIDER 105
CONTRACTOR'S AFFIRMATIONS AND WARRANTIES

Contractor affirms, certifies, and warrants that the information set forth in this Rider is current, complete, and accurate. Contractor agrees that in the event Contractor makes a false statement by affirming, certifying, or warranting the information set forth in this Rider, MD Anderson may, at its option, terminate the Agreement/Purchase Order to which this Rider is attached without further liability, and Contractor shall be removed from all MD Anderson bid lists.

Contractor agrees to notify MD Anderson in writing within thirty (30) days of any changes in the affirmations, certifications, and warranties made by Contractor under this Rider.

1. Contractor has neither given, offered to give, and has no intention to give at any time hereafter, any economic opportunity, future employment, gift, loan, gratuity, special discount, trip, favor or service to a public servant in connection with this Agreement/Purchase Order.

2. Neither Contractor nor the firm, corporation, partnership or institution represented by Contractor, or anyone acting for such firm, corporation, or institution, has violated the antitrust laws of the State of Texas, codified in Section 15.01, et. seq. *Texas Business and Commerce Code*, or the federal antitrust laws, nor communicated directly or indirectly Contractor's bid or proposal made to MD Anderson to any competitor or any other person engaged in such line of business. Contractor has not received compensation for participation in the preparation of the specifications for this Agreement or of the request for proposal-on which this Agreement is based.

3. Contractor is not excluded, debarred, or otherwise suspended from participating in the Federal Healthcare programs, as defined in 42 U.S.C. §1320a – 7b(f), or listed in the U.S. System for Award Management's ("SAM") List of Parties Excluded From Federal Procurement or Non-Procurement Programs, or the United States Office of Inspector General's List of Excluded Individuals/Entities ("LEIE"). Contractor further acknowledges that MD Anderson is prohibited by federal regulations and arrangements with third party payors from allowing any employee, subcontractor or agent of Contractor to provide services to MD Anderson if such employee, subcontractor, or agent is not eligible to participate in the Federal Healthcare programs. Therefore, Contractor shall not assign any employee, subcontractor or agent that is excluded from participating in any Federal Healthcare program, including but not limited to Medicare, Medicaid, or Tricare, to work on an MD Anderson engagement. Contractor shall perform an LEIE, SAM, and State Medicaid sanction check monthly on each of its employees, subcontractors and agents during the time such employees, subcontractors and agents are assigned to work on an MD Anderson engagement. Contractor acknowledges that MD Anderson will require immediate removal of any employee, subcontractor or agent of Contractor assigned to work on an MD Anderson engagement if such employee, subcontractor or agent is found to be excluded from participating in any Federal Healthcare program. Upon request, Contractor will provide MD Anderson a letter signed by an authorized officer of Contractor that certifies compliance with this Section.

4. Contractor certifies it qualifies status in one of the below as defined by the State of Texas:

   A. Contractor **is a Small Business** (as defined by Chapter 2155 of the Texas Government Code), and claims the following status:
   _____ (100) Small Business, Non-HUB
   _____ (100N) Disabled Person, Small Business
   _____ (141) Black American, Male, Small Business
   _____ (142) Black American, Female, Small Business
   _____ (151) Hispanic American, Male, Small Business
   _____ (152) Hispanic American, Female, Small Business
   _____ (160) Non-minority, Female, Small Business
   _____ (171) Asian Pacific American, Male, Small Business
   _____ (172) Asian Pacific American, Female, Small Business
   _____ (181) Native American, Male, Small Business
   _____ (182) Native American, Female, Small Business

   B. Contractor **is <u>not</u> a Small Business** as defined above and claims the following status:
   _____ (900N) Disabled Person
   _____ (941) Black American, Male
   _____ (942) Black American, Female
   _____ (951) Hispanic American, Male
   _____ (952) Hispanic American, Female
   _____ (960) Non-minority, Female
   _____ (971) Asian Pacific American, Male
   _____ (972) Asian Pacific American, Female
   _____ (981) Native American, Male
   _____ (982) Native American, Female
   _____ (900) None of the above

C. Contractor is to indicate below if it is not certified by the Texas Procurement and Support Services Division of the Texas Comptroller's Office as a Historically Underutilized Business.
_____ **YES**, Contractor is certified by the Texas Procurement and Support Services Division of the Texas Comptroller's Office.
_____ **NO**, Contractor is not certified by the Texas Procurement and Support Services Division of the Texas Comptroller's Office.

D. Contractor is:
_____ A Non-Resident Contractor (e.g., does not maintain a permanently staffed full time office in Texas).
_____ A Resident Contractor (e.g., does maintain a permanently staffed full time office in Texas).
_____ Anticipating the use of Texas Non-Resident firms as sub-contractors and will provide information of such contracts, when requested.
_____ Not anticipating the use of Texas Non-Resident firms as sub-contractors.

[Sourcing, item 5 should only be included if the Contractor is a franchise.]

5. If Contractor is a franchise, then:

A. Contractor affirms, certifies, and warrants that it shall maintain such franchise in full force and effect at all times during the existence of this Agreement/Purchase Order; and

B. Contractor shall provide MD Anderson with all data that MD Anderson, in its sole discretion, deems necessary to identify Contractor's franchise, the date on which Contractor's franchise will expire, and to certify that Contractor's franchise remains in good standing at all times during the existence of the Agreement/Purchase Order.

6. (1) No relationship (whether by blood, marriage, business association, capital funding agreement or by any other kinship or connection) exists between Contractor and an employee of MD Anderson, and (2) Contractor has not been an employee of MD Anderson within the twelve (12) month period immediately prior to the date of this Agreement/Purchase Order, or (3) in the event such a relationship does exist, full written disclosure of the relationship has been made by Contractor to MD Anderson prior the execution of this Agreement, or acceptance of Purchase Order. Contractor understands that all such disclosures will be subject to administrative review, and approval by MD Anderson prior to MD Anderson's execution of this Agreement/Purchase Order. Subsection (2) of this item does not prohibit MD Anderson from entering into a contract with a corporation, firm, or other business entity that employs a former or retired employee of MD Anderson within 12 months of the employee's leaving MD Anderson, provided that the former or retired employee does not perform services on projects for the corporation, firm, or other business entity that the employee worked on while employed by MD Anderson.

7. (1) Contractor is not a party to any agreement with MD Anderson whereby it has licensed from MD Anderson any technology, invention, or other intellectual property that relates to or is used with any goods or services being acquired by MD Anderson hereunder; and (2) as a result of the sale to MD Anderson of the goods or services hereunder, Contractor will not owe, directly or indirectly, any royalties, fees, or other consideration of any kind to MD Anderson or any employee of MD Anderson under the terms of any license agreement with MD Anderson. Contractor will advise MD Anderson in writing of any change in status with respect to the foregoing items (1)-(2), by sending written notice within ten (10) days of such status change to: Legal Services, Unit 537, The University of Texas MD Anderson Cancer Center, P.O. Box 301439, Houston TX 77230-1439, ATTENTION: Chief Legal Officer.

8. OSHA COMPLIANCE: By signing the Agreement, or accepting the Purchase Order, Contractor affirms, certifies, and warrants that all goods and services furnished under this Agreement/Purchase Order will meet or exceed the safety standards established and promulgated under the Federal Occupational Safety and Health Law (Public Law 91-596) and its regulations in effect as of the date on which the goods or services are furnished.

9. AFFIRMATIVE ACTION COMPLIANCE: In addition to the Contractor's affirmation, certification, and warranty under section 8 of this Rider, if this Agreement exceeds $50,000.00 in value, Contractor shall provide a copy of its written Civil Rights "Affirmative Action Compliance Program" which shall be incorporated into Exhibit A to this Rider. If Contractor is NOT required to have such a written Civil Rights "Affirmative Action Compliance Program", Contractor must state the reasons why it is not required to have such a written program in

RIDER 105
CONTRACTOR'S AFFIRMATIONS AND WARRANTIES

Exhibit A to this Rider.

EXHIBIT A

Civil Rights "Affirmative Action Compliance Program"

EXHIBIT G

Rider 106; Premises Rules

RIDER 106
PREMISES RULES

If this Agreement requires Contractor's presence on MD Anderson's premises, buildings, grounds, facilities, or campus, whether owned, leased or otherwise controlled by MD Anderson (collectively, "MD Anderson's campus"), Contractor represents and warrants that it will ensure that its representatives, agents, employees, and permitted subcontractors are aware of, fully informed about and in full compliance with Contractor's obligations under the following rules:

A. Contractor (and its representatives, agents, employees and permitted subcontractors) will comply with all applicable MD Anderson rules and policies, including, without limitation, those related to environmental quality, safety, fire prevention, noise, information security, and architectural barriers issued by MD Anderson's Department of Environmental Health and Safety, (713) 792-2888, and those that restrict the use of alcohol on MD Anderson's campus.

B. MD Anderson is a smoke-free institution. Smoking, or use of smokeless tobaccos, is prohibited throughout MD Anderson's campus.

C. Contractor will have the right to access only those areas in MD Anderson's campus that are public areas or areas that it is necessary for Contractor to access in order to provide the products and perform the services under this Agreement. Cellular telephones and two-way radios are prohibited in some areas of MD Anderson's campus and Contractor affirms, certifies, and warrants that its representatives, agents, employees, and permitted subcontractors will abide by such prohibitions.

D. It is the policy of MD Anderson to maintain a safe environment free from violence on MD Anderson's campus. Any direct or indirect threats or acts of violent behavior are prohibited. Violence includes, but is not limited to, intimidating, threatening, or hostile behavior; physical or verbal abuse; harassment, stalking, vandalism, arson, sabotage, use of weapons, possession of weapons on institutional property, the threat of any of the above, or any other act inconsistent with MD Anderson's campus violence policy. Intentionally bringing a prohibited weapon including a licensed, concealed handgun on MD Anderson's campus is a violation of MD Anderson's campus violence policy. Furthermore, any violation of a law prohibiting violence and violent behavior (including, but not limited to, the violation of Section 37.125 of the Texas Education Code or of Section 46.03 of the Texas Penal Code) also constitutes a violation of MD Anderson's campus violence policy. Violators of MD Anderson's campus violence policy or of any law prohibiting violence or violent behavior may be removed from or refused further access to MD Anderson's campus. Contractor represents and warrants that Contractor and all of its representatives, agents, employees, and permitted subcontractors will comply with MD Anderson's campus violence policy and all laws prohibiting violence and violent behavior. MD Anderson reserves the right to pursue criminal or civil actions against violators of MD Anderson's campus violence policy or of any law prohibiting violence and violent behavior. Contractor will remove from the performance of any work under this Agreement any Contractor representative, agent, employee, or permitted subcontractor that MD Anderson, in its sole discretion, finds has violated MD Anderson's campus violence policy or any law prohibiting violence and violent behavior.

E. Contractor will ensure all personnel sent to work at MD Anderson's campus that have direct patient care/contact under this Agreement will be able to show proof of a tuberculosis screening having been completed within ninety (90) calendar days prior to starting work at MD Anderson's campus and every two years thereafter. Contractor will also be able to show proof that these same personnel do not have active tuberculosis. Contractor will ensure all personnel with direct patient care/contact will be able to show proof of current immunization to influenza and proof of immunization or immunity to varicella (chicken pox) prior to active duty at MD Anderson. Records of screenings, vaccinations, immunity and related reports will be made immediately available to M.D. Anderson upon request. This paragraph does not apply to contractors deemed by MD Anderson to not have direct patient care/contact.

F. Contractor will be solely responsible for ensuring that all of its agents, employees, personnel, permitted subcontractors, or representatives abide by the provisions set forth in this Rider 106.

G. The University of Texas Police Department ("UTPD") & Security Equipment:

The UTPD is the law enforcement agency of record for all property and premises owned, leased, or otherwise under the control of MD Anderson. The UTPD will be notified in matters relating to the following:

1. Reporting of criminal incidents, including those occurring to or involving Contractor property and personnel if the incident occurs on MD Anderson campus;
2. The investigation of crimes, including those involving Contractor's property and personnel, if the incident occurs on MD Anderson campus; and
3. Reporting of security problems.

H. Contractor will not retain the services of outside guard or law enforcement services in connection with work on MD Anderson's campus without the specific prior written approval of the Chief of the UTPD.

I. Contractor will not install or operate any system intended to electronically control access and/or detect and report intrusion, hold-up or duress on any MD Anderson property, any MD Anderson leased premises or any premises otherwise under the control of MD Anderson. Where such systems are required due to the nature of the Contractor's operation, the UTPD will be responsible for approval, design and installation. Once approved by UTPD, the system's cost will be Contractor's responsibility.

J. Installation by Contractor of any security system is subject to the review and approval of UTPD. If Contractor desires to install an electronic security system in accordance with the terms of this Agreement, Contractor will contact the UTPD - Crime Prevention Component of UTPD at (713) 792-2890 and request that UTPD establish design criteria for the application. Contractor will provide written evidence of the estimated cost of the electronic security system to the Technical Services Component of UTPD located at 7777 Knight Road and, if the electronic security system is approved by UTPD, the Technical Services Component of UTPD will coordinate the installation of the approved system. Upon written approval of the UTPD Chief, Contractor may use a commercial installation company to install the electronic security system under the coordination of the UTPD.

K. All security related systems must be monitored and controlled by the UTPD and UTPD must be the primary monitoring station. If Contractor utilizes the services of a commercial alarm company or a proprietary alarm monitoring station, the system may report to such location after first transmitting the alarm to the UTPD.

L. Contractor is responsible for the performance of the persons Contractor assigns to provide services for MD Anderson on MD Anderson's campus. Contractor will not knowingly assign individuals to provide services on MD Anderson's campus who have a history of violent, unacceptable, or grossly negligent behavior or who have a felony conviction. Prior to supplying labor services under this Agreement, MD Anderson may require Contractor to provide a list identifying the individuals that may be assigned to MD Anderson along with a letter signed by an appropriate officer of Contractor that affirms compliance with this Rider. Contractor will revise such letter each time there is a change in Contractor's personnel assigned to MD Anderson's campus, but in any case, annually on the anniversary date of this Agreement.

M. Contractor will ensure that all individuals assigned by Contractor to perform services on MD Anderson's campus will display in plain view a photo identification badge provided by MD Anderson while on MD Anderson's campus.

N. Contractor will retain resumes of all Contractor's employees assigned to this project. Contractor will ensure the proper maintenance of these documents for a minimum of one (1) year after contract completion. Contractor will maintain all documentation, including the results of any background checks, during the term of this Agreement.

O. MD Anderson will have the right to reject any individual(s) that Contractor offers to assign to MD Anderson's account for any reason. In addition, if Contractor and/or its personnel fail to abide by these Premises Rules, MD Anderson will have the right to deny Contractor and its personnel access to MD Anderson's campus.

P. MD Anderson will not be obligated to pay for labor hours supplied by any individual(s) upon whom a background check and records check is not completed or who fails to meet the standards described in this Rider.

EXHIBIT H

Rider 107; Travel Policy

RIDER 107
TRAVEL POLICY

All travel and expense costs will be calculated as follows:

1. Contractor must use regular coach air transportation (state rate or corporate rate, whichever is lower) for travel in excess of two hundred (200) miles, unless otherwise agreed in advance by MD Anderson. In order to maximize discounted airfares, Contractor, with the cooperation of MD Anderson, will schedule on-site visits far enough in advance to take advantage of most advance-purchase offers. In the event meetings or on-site visits are cancelled by MD Anderson, Contractor may charge for any advance-purchase cancellation penalties imposed by the airline.

2. Corporate or state rate discounts (whichever is higher) will be used for hotel accommodations.

3. Maximum billable amount per person per day for meals will be $36.00. Departing from MD Anderson prior to 12:01 p.m. negates any billing for meals for that day. Meal expenses are reimbursable for Contractor personnel who travel fifty (50) miles or more, and stay overnight.

4. Rental cars will be the least expensive, air-conditioned, automatic transmission, mid-size car available to Contractor under corporate rate programs. Full coverage collision insurance may be used for rental cars, but personal protection plans will not be reimbursed.

5. Ground transportation, parking costs and tolls may be invoiced at cost.

6. Personal automobile mileage charges will be computed based upon actual miles to and from the appropriate Contractor office to and from the applicable MD Anderson facility. Mileage charges will be invoiced at the standard mileage rate recognized by the State of Texas at the time of invoicing.

7. Miscellaneous expenses (i.e., tips, transfers, etc.) will be invoiced in an amount not to exceed $5.00 per person per day, if deemed reasonable.

All travel or miscellaneous expenses must receive prior written approval by the Project Coordinator. Contractor will <u>not</u> be reimbursed for expenses that do not receive this prior written approval.

All travel or miscellaneous expenses must be submitted with an original receipt. All approved expenses will be reimbursed at "actual cost" only. Contractor will <u>not</u> be reimbursed for expenses that are not accompanied by original receipts.

EXHIBIT I

Rider 116; Invoice Payment Requirements

RIDER 116
INVOICE PAYMENT REQUIREMENTS

Section 1. CONTRACT VALUE

Absent prior written authorization, invoices for amounts in excess of the Cap Amount will not be paid and will be returned unpaid.

Section 2. INVOICE ROUTING; FORMAT; TIMELINESS

2.1. Invoice Submission Location: MD Anderson cannot retrieve invoices through Contractor's website and can only accept invoices through the following format (listed in order of preference):

Submittal Format	Submittal Address
EDI	Qualifying Contractors contact: Accounts Payable 713.745.9439
E-mail (one invoice per e-mail in PDF form)	mdaccap@mdanderson.org
United States Postal Service	Accounts Payable – Unit 1699 P.O. Box 301401 Houston, TX 77230-1401
Carrier (UPS, Fed Ex, etc.)	The University of Texas MD Anderson Cancer Center Accounts Payable 7007 Bertner Ave – Unit 1699 Houston, TX 77030

2.2. Electronic Invoice: An electronic invoice shall be provided in a secure, non-alterable electronic format (Adobe *.pdf is acceptable) e-mailed directly to mdaccap@mdanderson.org with the Contractor name and invoice number in the e-mail Subject line. Do not send or copy the MD Anderson Accounts Payable representative. MD Anderson will accept only one invoice per e-mail and all invoices must include a valid MD Anderson Purchase Order Number. Invoices without a Purchase Order Number or an incorrect Purchase Order Number will be returned unpaid to the Contractor.

2.3. Effective Invoice Period: Contractor will submit invoices within sixty (60) calendar days after delivery of the goods or complete performance of the services invoiced. MD Anderson will not be obligated to pay invoices that are not received within sixty (60) calendar days after delivery of the goods or complete performance of the services, unless acceptable delays are identified and approved in writing by MD Anderson prior to the delay.

2.4. Third Party Invoicing: MD Anderson does not accept invoicing from third parties acting on behalf of the vendor.

Section 3. ACCURATE BILLING

3.1. Invoice Requirements: Each invoice must include:

- Billing related to only one valid MD Anderson Purchase Order.
- Invoice should be an original version and without manual or written changes.
- Valid MD Anderson Purchase Order Number clearly stated on the face of the invoice.
- Contractor's legal name and "remit to" address, telephone and fax numbers.
- A uniquely assigned invoice number.
- An invoice date.
- The MD Anderson "bill to" address listed in Section 2.1 for the United States Postal Service submittal format.
- A description of the goods or services purchased with the line item purchase price.
- The correct invoice amount (invoices that contain an incorrect amount or a disputed amount will need to be revised and resubmitted).
- For goods, the manufacturer's part number, item description, quantity shipped, and unit price.
- A line item for all freight, shipping and handling costs related to the invoice (not billed separately).

- Line items matching MD Anderson Purchase Order line items (invoice lines must exactly match, or be less than, MD Anderson Purchase Order line items).

Each invoice must be a standard typed original invoice on Contractor letterhead. MD Anderson will not make payments based on statements, quotations, service contracts, shipping/packing slips, calculator tapes, work orders, pro-forma statements, Letter of Intent, Memorandum of Understanding or other non-invoice documents.

3.2. Deductions: MD Anderson may reduce payment to Contractor for sales tax (for more information refer to Section 8.9 of the Agreement).

3.3. Credit Memoranda: Credit memoranda submitted to MD Anderson must include the Invoice Requirements set out in Section 3.1 of this Rider 116, as well as the following:

- The phrase "Credit Memo" in clear and apparent text.
- A uniquely assigned Credit Memo number.
- A description of the goods or services credited.
- A valid Purchase Order Number against which MD Anderson may credit the Credit Memo amount.

Section 4. ACH PAYMENT DISBURSEMENT METHOD

4.1. Preferred Payment Method – Automated Clearing House (ACH): MD Anderson's preferred process for settling financial obligations is to utilize the National Automated Clearing House Association (NACHA) standard Cash Concentration and Disbursement (CCD) format. This industry standard process is utilized and recognized by most payees as the most efficient, safe and timely way to transfer funds. Our goal is that every payment made by MD Anderson is made via electronic funds transfers, unless legally prohibited. This service may be set up by contacting MD Anderson's Treasury Services and Operations office at 713-745-9580 or by e-mail: TreasuryServices@mdanderson.org.

Upon payment initiation, your company will receive the remittance information by e-mail with an attached Adobe Acrobat PDF file containing information detailing the payment date, invoice number, dollar amount, etc. Questions regarding this matter can be directed to MD Anderson's Treasury Services and Operations office at 713.745.9580 or by e-mail: TreasuryServices@mdanderson.org.

4.2. Check Disbursement: MD Anderson initiates payment disbursements on Tuesdays and Thursdays with typical funds availability the following business day.

4.3. Accounts Payable Invoice Approval Process:

4.3.A Goods: MD Anderson requires a 3-way match for payment on Purchase Orders for goods. The 3-way match includes a MD Anderson Purchase Order, a MD Anderson Materials Management Receipt, and a Contractor Invoice.

4.3.B Services: MD Anderson requires a 2-way match for payment on Purchase Orders for services. The 2-way match includes a MD Anderson Purchase Order and a Contractor Invoice. In addition, complete performance of services must be verified by an appropriate MD Anderson representative before an invoice for such services will be paid unless otherwise stated in the Agreement.

Section 5. SUPPLIER INQUIRY OPTIONS

5.1. Payment Inquiry: Contractor may research invoice status by contacting the MD Anderson Accounts Payable Department through the following methods (a MD Anderson Purchase Order Number and/ or Contractor Invoice Number is required):

- E-Mail (questions only): mdaccAPInquiry@mdanderson.org
- Telephone: 713.745.9439
- Vendor Self Service (VSS) System: VSS is a secure, web-based system that allows Contractors to research detailed information regarding invoice status and MD Anderson payments online. To register for this service visit http://mdanderson.org/suppliers or call 713.745.7997.

5.2. Reconciliation of Payment: MD Anderson notifies Contractor that invoices have been paid by payment stub for standard check payments and e-mail for ACH payments.

RIDER 116
INVOICE PAYMENT REQUIREMENTS

Section 6. MATERIALS MANAGEMENT

6.1. Freight: MD Anderson does not accept Collect On Demand (COD) shipping.

6.2. Receiving/Logistics/Dock: All deliveries must reference a valid MD Anderson Purchase Order Number or risk being turned away. Purchase Orders for goods not delivered to a MD Anderson receiving dock risk payment delays, unless otherwise stated in the Agreement.

MD Anderson Receiving Docks	
MD Anderson Hospital 1515 Holcombe Blvd. Houston TX 77030-4009	**Basic Sciences Research Building** 6767 Bertner Houston, TX 77030-2603
Houston Main Bldg./ Ambulatory Clinical Bldg./ Mays Cancer Prevention Bldg. 1155 Pressler Street Houston, TX 77030-3721	**Faculty Center Building** 1400 Holcombe Blvd. Houston, TX 77030-4008
Smith Research Bldg. 7777 Knight Road Houston, TX 77054-3005	**South Campus Research Bldg. II** 7435 Fannin Street. Houston, TX 77054-1901
Proton Therapy Bldg. 1840 Old Spanish Trail Houston, TX 77054-2002	

Section 7. GOVERNING LAWS

7.1. W-9: MD Anderson requires Contractor to have a valid W-9 on file with MD Anderson prior to all disbursements. Contractor may download the W-9 form from MD Anderson's website by accessing the Supply Chain Management Internet site at: http://mdanderson.org/suppliers then clicking on "Contract Information."

7.2. Prompt Payment Act: All funds held by MD Anderson are subject to the Texas Prompt Payment Act, Chapter 2251, *Texas Government Code*. Chapter 2251 of the *Texas Government Code* governs (i) when a payment by MD Anderson is overdue, and (ii) the rate of interest that accrues on such overdue payments.

EXHIBIT J

Rider 117; Institutional Policies

THE UNIVERSITY OF TEXAS
MD Anderson
~~Cancer~~ Center

RIDER 117
Institutional Policies

In accordance with the education requirements set forth in Section 6032 of the Deficit Reduction Act of 2005 (Act), MD Anderson has implemented, and Contractor agrees to abide by, the following policies, as may be subsequently amended, that are available at: **http://www.mdanderson.org/about-us/doing-business/vendors-and-suppliers/index.html.**

1. Fraud, Waste, and Abuse Policy
2. Hospital Compliance Plan
3. Non-Retaliation Policy

EXHIBIT K

Respondent's Pricing and Delivery Proposal and Execution of Offer

EXHIBIT L

Performance and Payment Bonds

PERFORMANCE BOND

Surety Bond No._____

STATE OF TEXAS §

KNOW ALL MEN BY THESE PRESENTS:

COUNTY OF §

That we, _____, as Principal, and _____, as Surety, are hereby held and firmly bound unto the State of Texas as Obligee in the penal sum of _____ ($_____) for payment whereof the said Principal and Surety bind themselves, their heirs, executors, administrators, and successors, jointly and severally, firmly by these presents.

The conditions of this obligation are such that whereas the Principal entered into a certain contract, hereto attached, and made a part hereof, with the State of Texas, acting by and through the Board of Regents of The University of Texas System for and on behalf of _____, _____, dated _____, _____, for _____ (Project No. _____).

NOW THEREFORE, the condition of this obligation is such that, if the Principal shall faithfully perform the said Contract in accordance with the Plans and Specifications and Contract Documents, and shall fully indemnify and save harmless the State of Texas from all cost and damage which the State of Texas may suffer by reason of Principal's default or failure so to do and shall fully reimburse and repay the State of Texas all outlay and expense which the State of Texas may incur in making good any such default, then this obligation shall be null and void, otherwise it shall remain in full force and effect.

In the event that the Principal is declared in default under the said Contract, the Surety will within Fifteen (15) days of the State of Texas' declaration of such default take over and assume completion of said contract and become entitled to the payment of the balance of the Contract Price. Conditioned upon the Surety's faithful performance of its obligations, the liability of the Surety for the Principal's default shall not exceed the penalty of this bond.

The Surety agrees to pay to the State of Texas upon demand all loss and expense, including attorney's fees, incurred by the State of Texas by reason of or on account of any breach of this obligation by the Surety.

This bond is issued pursuant to the requirements of Section 2253.021, Texas Government Code, as amended.

Provided further, that if any legal action be filed upon this bond, venue shall lie in the county where the said Contract is to be performed.

Provided further, that the Surety, for value received, hereby stipulates and agrees that no change, extension of time, alteration or addition to the terms of the said Contract, or to the work to be performed thereunder, or the Specifications accompanying the same, shall in anywise affect its obligation on this bond, and it does hereby waive notice of any such change, extension of time, alteration or addition, to the terms of the said Contract or to the work or to the Specifications.

By signature hereon, if the amount of this bond exceeds $100,000, then the Surety attests that at the time the bond was executed (and Surety shall provide the Obligee with evidence of the following):

(1) it was a holder of a certificate of authority from the United States Secretary of the Treasury to qualify as a surety on obligations permitted or required under federal law; or

(2) had reinsured any liability in excess of $100,000 by a reinsurer holding a certificate of authority from the United States Secretary of the Treasury.

IN WITNESS WHEREOF, the above bounden parties have executed this instrument under their several seals this _____ day of _____ in the year _____, the name and corporate seal of each corporate party being hereto affixed, and these presents duly signed by its undersigned representative pursuant to authority of its governing body.

(SEAL)

_____
Principal

ATTEST:

By: _____

_____
(Typed Name and Title)

By: _____

_____
(Typed Name and Title)

(SEAL)

_____
Surety

ATTEST:

By: _____

_____
(Typed Name and Title)

By: _____

_____
(Typed Name and Title)

Surety's Texas Local Recording Agent or Resident Agent:

_____
(Signature)

Surety's Home Office Agent or Servicing Agent:

Name: _____

_____ Title: _____
(Typed Name)

License No. _____

File No. _____

Address: _____ Address: _____

_____ _____

Telephone No.: _____ Telephone No.: _____

PAYMENT BOND

Surety Bond No._____

STATE OF TEXAS §

KNOW ALL MEN BY THESE PRESENTS:

COUNTY OF §

That we, _____, as Principal, and _____, as Surety, are hereby held and firmly bound unto the State of Texas as Obligee in the penal sum of _____ ($_____) for the payment whereof, the said Principal and Surety bind themselves, their heirs, executors, administrators, and successors, jointly and severally, firmly by these presents.

The conditions of this obligation are such that whereas the Principal entered into a certain contract, hereto attached, and made a part hereof, with the State of Texas, acting by and through the Board of Regents of The University of Texas System for and on behalf of _____ ____, _____, dated _____, _____, for _____ (Project No. _____).

NOW, THEREFORE, the condition of this obligation is such that, if the Principal shall promptly make payments to all claimants as defined in Section 2253.021, Texas Government Code, as amended, of all persons supplying labor and materials in the prosecution of the work provided for in said contract, then this obligation shall be null and void, but otherwise it shall remain in full force and effect.

In the event that the Principal fails to promptly pay when due persons who have supplied labor, materials, or supplies used in the performance of the said contract, the Surety will, upon receipt of notice from the State of Texas or a claim in the form required by law, satisfy all undisputed balances due, and make arrangements satisfactory to the interested parties to resolve all amounts disputed in good faith, but in no event shall the liability of the Surety for the Principal's failure to promptly pay for labor, materials, or supplies exceed the penalty of this bond.

This Surety agrees to pay the State of Texas upon demand all loss and expense, including attorney's fees, incurred by the State of Texas by reason or on account of any breach of this obligation by Surety.

Provided further, that this bond is made and entered into for the protection of all claimants supplying labor and material in the prosecution of the work provided for in said Contract, and all such claimants shall have a direct right of action under the bond as

provided in Section 2253.021, Texas Government Code, as amended. If any legal action is filed upon this bond, venue shall be in the county where the said Contract is to be performed.

By signature hereon, if the amount of this bond exceeds $100,000, then the Surety attests that at the time the bond was executed (and Surety shall provide the Obligee with evidence of the following):

(1) it was a holder of a certificate of authority from the United States Secretary of the Treasury to qualify as a surety on obligations permitted or required under federal law; or

(2) had reinsured any liability in excess of $100,000 by a reinsurer holding a certificate of authority from the United States Secretary of the Treasury.

IN WITNESS WHEREOF, the above bounden parties have executed this instrument under their several seals this _____ day of _____ in the year _____, the name and corporate seal of each corporate party being hereto affixed, and these presents duly signed by its undersigned representative pursuant to authority of its governing body.

(SEAL) _____
Principal

ATTEST:

By: _____ By: _____

_____ _____
(Typed Name and Title) (Typed Name and Title)

(SEAL) _____
Surety

ATTEST:

By: _____ By: _____

_____ _____
(Typed Name and Title) (Typed Name and Title)

Surety's Texas Local Recording Agent or Resident Agent:

_____
(Signature)

_____
(Typed Name)

License No. _____

File No. _____

Address: _____

Telephone No.: _____

Surety's Home Office Agent or Servicing Agent:

Name: _____

Title: _____

Address: _____

Telephone No.: _____